PARTS LIST AND DESCRIPTION

TUBES

ITEM No.	AMPERCEX ◆ GENERAL ELECTRIC ◆ RCA ◆ RAYTHEON ◆ SYLVANIA ◆ USE	TYPE
V1	AF Amp. Output	12AX7/ECC83
V2		50EH5
V3	Output	50EH5

POWER RECTIFIERS & SIGNAL DIODES

ITEM No.	MEASURED CURRENT	ORIGINAL Part or Type No.	RECTIFIERS: MALLORY PART No.	RECTIFIERS: RCA PART No.	RECTIFIERS: SARKES TARZIAN PART No.	NOTES
X1	.88A	93B12-1	1N2070	1N1763	40H	HV Rectifier

ELECTROLYTIC CAPACITORS

ITEM No.	RATING: CAP.	RATING: VOLT.	ADMIRAL PART No.	AEROVOX PART No.	CORNELL-DUBILIER PART No.	GENERAL ELECTRIC PART No.	MALLORY PART No.	PYRAMID PART No.	SPRAGUE PART No.
C1A	■100	200	67D7-162	AFH2-29			FP216.8	TMD2200	TVL-2461
B	50	200		PRS1595			TC-1265	TD-100-200	TVA-1445
C	50	200							
C2A	100	15	67C26-7	PR3-050	NLW100-15	QT3-7	TCD-508	MLV100-15	TS-1162
B	20	150		PRS1440	BBR20-150			TD-20-150	TVA-1410

FIXED CAPACITORS

ITEM No.	RATING	REMARKS	ADMIRAL PART No.	AEROVOX PART No.	CENTRALAB PART No.	CORNELL-DUBILIER PART No.	ELEMENCO PART No.	MALLORY PART No.	SPRAGUE PART No.
C3	33	(35) †	DI-33	DI-33	DD-330	L10Q33	CCD-330	GP433	10TS-Q33
C4	.02		BPD-02	BPD-02	DD-203	BYB6S2	CCD-203	B-120	5HK-S20
C5	.005		BPD-005	BPD-005	DD-502	BYA10D5	CCD-502	B-250	5HK-D50
C6	.002		BPD-002	BPD-002	DD-202	BYA10D2	CCD-202	B-220	5HK-D20
C7	.047	200V	P288N-047	P288N-047	DD-503	CUB2S47	4DP-3-473	GEM-2147	2TM-S47
C8	.001		BPD-001	BPD-001	DD-102	BYA10D1	CCD-102	B-210	5HK-D10
C9	.001	1400V	HVD-15-1000	HVD-15-1000	DD30-102	HVB16D1	3CCD-102	UAC-210	BL-D10
C10	33	(35) †	DI-33	DI-33	DD-330	L10Q33	CCD-330	GP433	10TS-Q33
C11	.02		BPD-02	BPD-02	DD-203	BYB6S2	CCD-203	B-120	5HK-S20
C12	.005		BPD-005	BPD-005	DD-502	BYA10D5	CCD-502	B-250	5HK-D50
C13	.002		BPD-002	BPD-002	DD-202	BYA10D2	CCD-202	B-220	5HK-D20
C14	.047	200V	P288N-047	P288N-047	DD-503	CUB2S47	4DP-3-473	GEM-2147	2TM-S47
C15	.001		BPD-001	BPD-001	DD-102	BYA10D1	CCD-102	B-210	5HK-D10
C16	.001	1400V	HVD-15-1000	HVD-15-1000	DD30-102	HVB16D1	3CCD-102	UAC-210	BL-D10
C17	.047	600V	P688N-047	P688N-047	DD-503	CUB6S47	6DP-3-473	GEM-6147	6TM-S47
C18	.047	600V	P688N-047	P688N-047	DD-503	CUB6S47	6DP-3-473	GEM-6147	6TM-S47

† Alternate Value.

CONTROLS

All wattages 1/2 watt, or less, unless otherwise listed.

ITEM No.	USE	RESISTANCE	ADMIRAL PART No.	CENTRALAB PART No.	CLAROSTAT PART No.	CTS-IRC PART No.	MALLORY PART No.
R1A	Loudness, Right	3.3meg Tap@ 1.5meg	75D46-33	ABT-180 †, STR-180 †, AK-33 or (F16-3meg, R16-3meg, RS2-3meg)		QCB1①, MB18140② TM6, QCM or (BU2, SC29T, SS4, DC1)*	FA36T155, RU36T155, SL-45
B	Loudness, Left	3.3meg Tap@ 1.5meg	75D46-32	AB-70, SR-70, AK-33, or (F2-1meg, R2-1meg, TFS212)	AD47-1meg-Z, RS-3/16	QCB1①, MB13137, TM8, QCM or (BU2, SC15, SS4, DC1)*	FA16A, RU16A, SL-45
R2A	Bass-Treble, Right	1.5meg					
B	Bass-Treble, Left	1meg					
R3	Balance	1.5meg	75D1-139	AB-742, AK-33 or (F1-1.5meg, SFS212)	A47-1.5meg-S, RS-3/16	B11-138, SK9 or (BU2, CF18, SS4, DC1)*	UA155L, SD3500, or (RU155L, SL-38, SD3500) or U155, DS-37)

* "SNAPTROL"
† Do not use 330K Tap.
① Use QCB1 instead of tab mtg. plate in TM8.

SPEAKER

ITEM No.	TYPE	REPLACEMENT DATA: ADMIRAL PART No.	REPLACEMENT DATA: GUAM PART No.	NOTES
SP1	5" PM 3-4Ω	78C150-10	5A15	Model Y4257
SP2	5" PM 3-4Ω	78C150-10	5A15	Model Y4257
	3½" PM 3-4Ω	78B148-1	3A15TZ3.2	Models Y4291/92/93. Two Used.
	8" PM 3-4Ω	78C173-1		Models Y4291/92/93. Two Used.
	6" PM 3-4Ω	78C162-5		Models Y4451/52/53. Two Used.

PHONO CARTRIDGE & NEEDLES

*NEEDLE LISTINGS SHOWN ARE FOR RESPECTIVE REPLACEMENT CARTRIDGES ONLY.

ITEM No.	ADMIRAL PART No.: CARTRIDGE	ADMIRAL PART No.: NEEDLE*	REPLACEMENT DATA: ASTATIC PART No.: CARTRIDGE	ASTATIC PART No.: NEEDLE*	ELECTRO-VOICE PART No.: CARTRIDGE	ELECTRO-VOICE PART No.: NEEDLE*	SONOTONE PART No.: CARTRIDGE	SONOTONE PART No.: NEEDLE*	NOTES
M1	409C39-1	98C95-14* (78)	133	N50*	26	2604 *	16TAS	N-16TAS*	Model Y4257.
		98C95-15* (78)				2605 *			
				N326-7s (LP)		26T7			Model Y4257. Replacement needles for original cartridge.
				N326-3s (78)		26T8			
	409C39-2	98C95-16* (LP)							Models Y4291/92/93
		98C99-15* (78)							
	409C44-1①	98C95-19* (LP)							① Models Y4451/52/53
	409C44-2②	98C95-17* (78)							② Models Y4471/72/73

CABINETS & CABINET PARTS

(When Ordering Specify Model, Chassis & Color)

ITEM	PART No.
Knob Assembly	700B281-3
Cabinet, Walnut-Model Y4451	35E730-1
Cabinet, Mahogany-Model Y4452	35E730-2
Cabinet, Blond-Model Y4453	35E730-3
Cabinet, Walnut-Model Y4471	35E739-1
Cabinet, Mahogany-Model Y4472	35E739-2
Cabinet, Blond-Model Y4473	35E739-3

ITEM	PART No.
Legs, Walnut-Model Y4451	35E730-51
Legs, Mahogany-Model Y4452	35E730-52
Legs, Blond-Model Y4453	35E730-53
Cabinet, Brown/Beige-Model Y4257	35E671-1
Cabinet, Walnut-Model Y4291	35E684-1
Cabinet, Mahogany-Model Y4292	35E684-2
Cabinet, Blond-Model Y4293	35E684-3

WIRING DATA

General-use Unshielded Hook-up Wire	Use BELDEN No. 8530 (Solid) Available in 12 Colors 8524 (Stranded) Available in 12 Colors
Power Cord	Use BELDEN No. 17106 (Plastic) or 17126 (Rubber) - 6 Ft. 17109 (Plastic) or 17129 (Rubber) - 9 Ft.
Power Cord (Interlock Type)	Use BELDEN No. 8874 (Rubber) or 8895 (Plastic)
Low-Loss Shielded Lead (Interconnecting)	Use BELDEN No. 8401 8402
Phono Pick-up Arm Cable	Use BELDEN No. 8430 (Two Conductor-Unshielded) 8429 (Two Conductor-Shielded) 8418 (Three Conductor-Shielded)

PHOTOFACT® Folder

SET 641 FOLDER 5

ADMIRAL CHASSIS 3G2

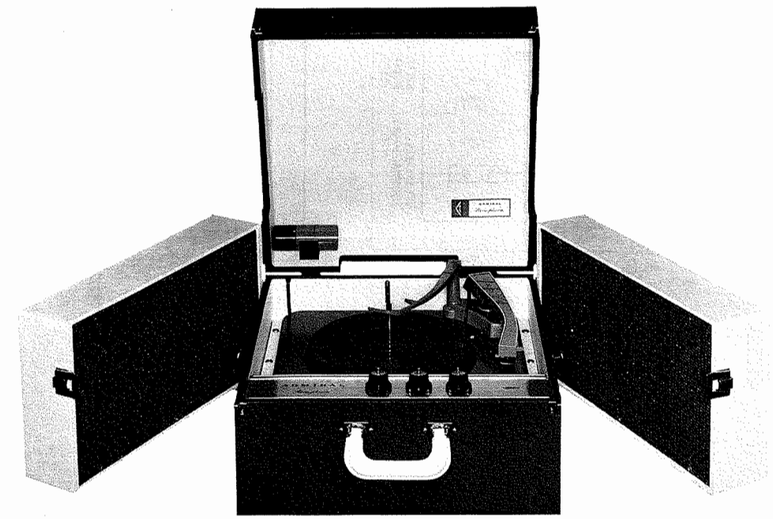

TRADE NAME	Admiral Models Y4257, Y4291, Y4292, Y4293, Y4451, Y4452, Y4453, Y4471, Y4472, Y4473(Ch. 3G2)
MANUFACTURER	Admiral Corp., National Service Div., 903 Morrissey Drive, P.O. Box 845, Bloomington, Illinois
TYPE SET	AC Operated 3 Tube Stereo Phono Amplifier With 4 Speed Automatic Record Changer
POWER SUPPLY	110 — 120 Volts AC, 60 Cycles RATING 34 Watts, .4 Amp. @117 Volts AC

MODEL Y4257 USES RECORD CHANGER RC7DOB-22AH
MODELS Y4291, Y4292, Y4293 USE RECORD CHANGER RC7DOB-23AH
MODELS Y4451, Y4452, Y4453 USE RECORD CHANGER RC7DOB-28W
MODELS Y4471, Y4472, Y4473 USE RECORD CHANGER RC7DOB-29W
FOR SERVICE INFORMATION ON RECORD CHANGER — SEE SIMILAR ADMIRAL RC7 SERIES — PHOTOFACT SET 529 FOLDER 3

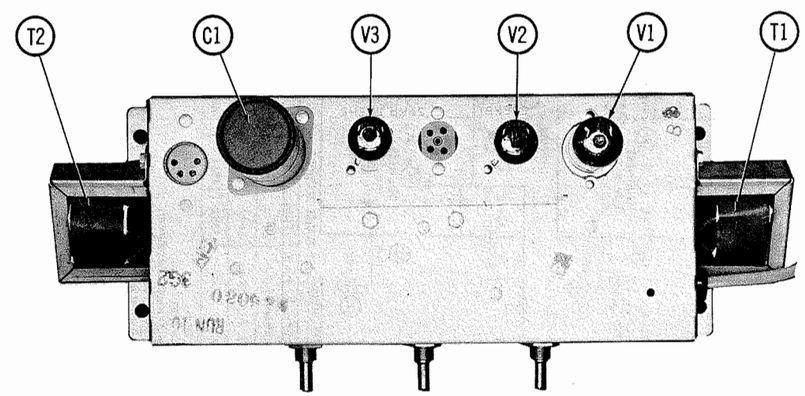

HOWARD W. SAMS & CO., INC. Indianapolis 6, Indiana

The listing of any available replacement part herein does not constitute in any case a recommendation, warranty or guaranty by Howard W. Sams & Co., Inc., as to the quality and suitability of such replacement part. The numbers of these parts have been compiled from information furnished to Howard W. Sams & Co., Inc., by the manufacturers of the particular type of replacement part listed. Reproduction or use, without express permission, of editorial or pictorial content, in any manner, is prohibited. No patent liability is assumed with respect to the use of the information contained herein. ©1963 Howard W. Sams & Co., Inc., Indianapolis 6, Indiana.

Printed in U.S. of America

MS076

DATE 6-63 SET 641 FOLDER 5

ADMIRAL CHASSIS 3G2

SET 641 FOLDER 5

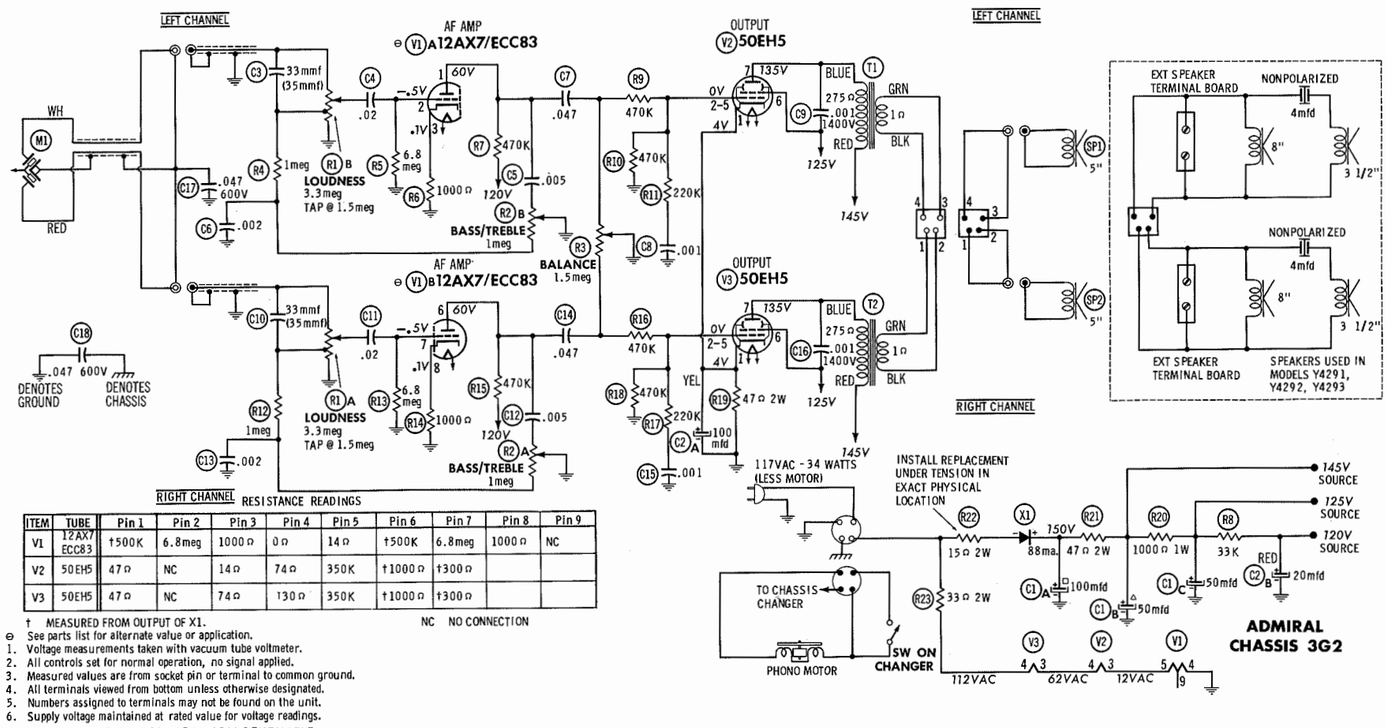

RIGHT CHANNEL RESISTANCE READINGS

ITEM	TUBE	Pin 1	Pin 2	Pin 3	Pin 4	Pin 5	Pin 6	Pin 7	Pin 8	Pin 9
V1	12AX7 ECC83	†500K	6.8meg	1000Ω	0Ω	14Ω	†500K	6.8meg	1000Ω	NC
V2	50EH5	47Ω	NC	14Ω	74Ω	350K	†1000Ω	†300Ω		
V3	50EH5	47Ω	NC	74Ω	130Ω	350K	†1000Ω	†300Ω		

† MEASURED FROM OUTPUT OF X1. NC NO CONNECTION

⊖ See parts list for alternate value or application.
1. Voltage measurements taken with vacuum tube voltmeter.
2. All controls set for normal operation, no signal applied.
3. Measured values are from socket pin or terminal to common ground.
4. All terminals viewed from bottom unless otherwise designated.
5. Numbers assigned to terminals may not be found on the unit.
6. Supply voltage maintained at rated value for voltage readings.

A PHOTOFACT STANDARD NOTATION SCHEMATIC

©Howard W. Sams & Co., Inc. 1963

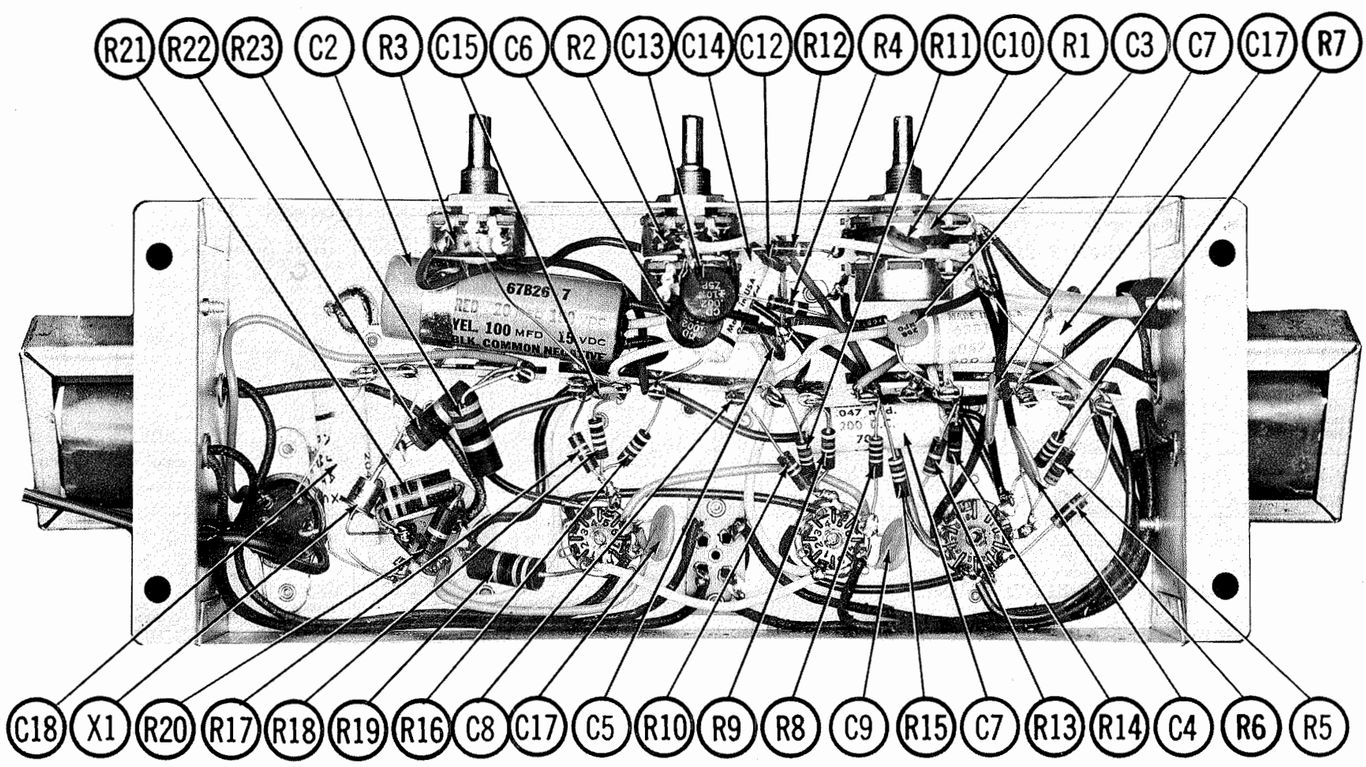

CHASSIS BOTTOM VIEW