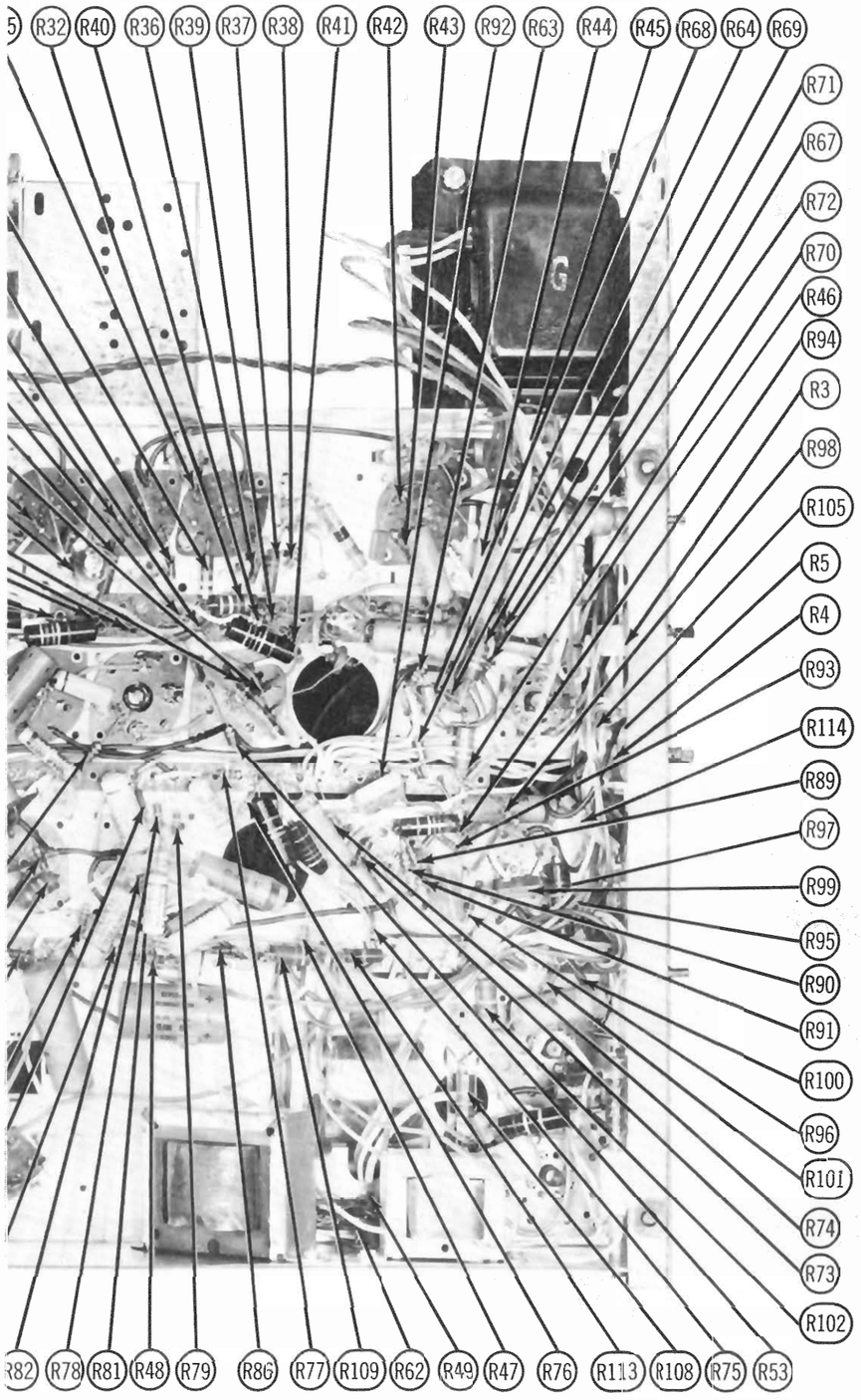

W-RESISTOR IDENTIFICATION

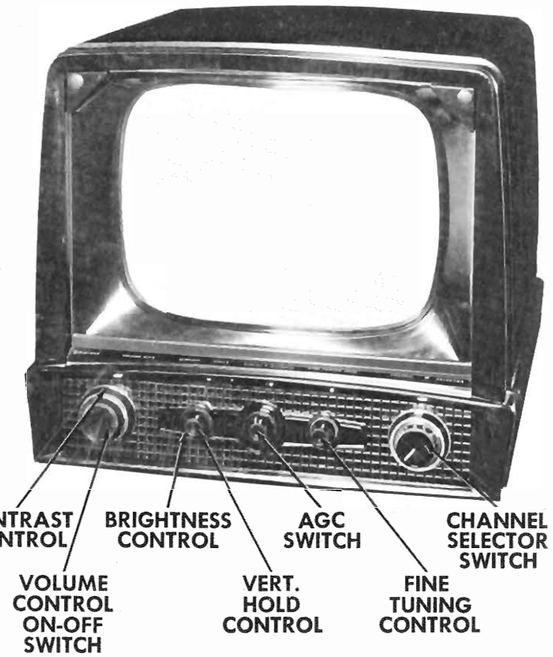

GENERAL ELECTRIC MODELS 17T20, 21C103, 21C104, 21T22, 21T23, 21T24, 21T25

GENERAL ELECTRIC MODEL 17T20

TRADE NAME	General Electric Models 17T20, UHF, 21C103, UHF, 21C104, UHF, 21T22, UHF, 21T23, UHF, 21T24, UHF, 21T25, UHF
MANUFACTURER	General Electric Co., Electronics Dept., Electronics Park, Syracuse, N.Y.
TYPE SET	Television Receiver
TUBES	Nineteen
POWER SUPPLY	110-120 Volts AC-60 Cycles RATING 1.5 Amp. @ 117 Volts AC
TUNING RANGE	Channels 2 thru 13 VHF, 14 thru 83UHF, Video IF 45.75MC, Sound IF 41.25MC (Intercarrier)

INDEX

Alignment Instructions 6, 7
Drive Cord Stringing 11
Disassembly Instructions 18
Horizontal Sweep Circuit Adjustments 11
Parts List and Descriptions ..... 13 thru 16
Photographs
Cabinet-Rear View 11
Capacitor Identification 4, 9
Chassis-Top View 3
RF Tuner 10, 16
Resistor Identification 19, 20
Photographs (Cont)
Trans., Inductor & Alignment Identification 3
Resistance Measurements 8
Servicing in the Field 18
Schematic (TV) 2
Schematic (UHF Tuner) 17
Trouble Shooting Aids 12, 17
Tube Failure Check Chart 5
Tube Placement Chart (Bottom View) 8
Tube Placement Chart (Top View) 5

HOWARD W. SAMS & CO., INC. • Indianapolis 5, Indiana

"The listing of any available replacement part herein does not constitute in any case a recommendation, warranty or guaranty by Howard W. Sams & Co., Inc., as to the quality and suitability of such replacement part. The numbers of these parts have been compiled from information furnished to Howard W. Sams & Co., Inc., by the manufacturers of the particular type of replacement part listed." "Reproduction or use, without express permission, of editorial or pictorial content, in any manner, is prohibited. No patent liability is assumed with respect to the use of the information contained herein. Copyright 1955 by Howard W. Sams & Co., Inc., Indianapolis 5, Indiana, U. S. of America. Copyright under International Copyright Union. All rights reserved under Inter-American Copyright Union (1910) by Howard W. Sams & Co., Inc." Printed in U. S. of America

DATE 2-55 SET 265 FOLDER 6

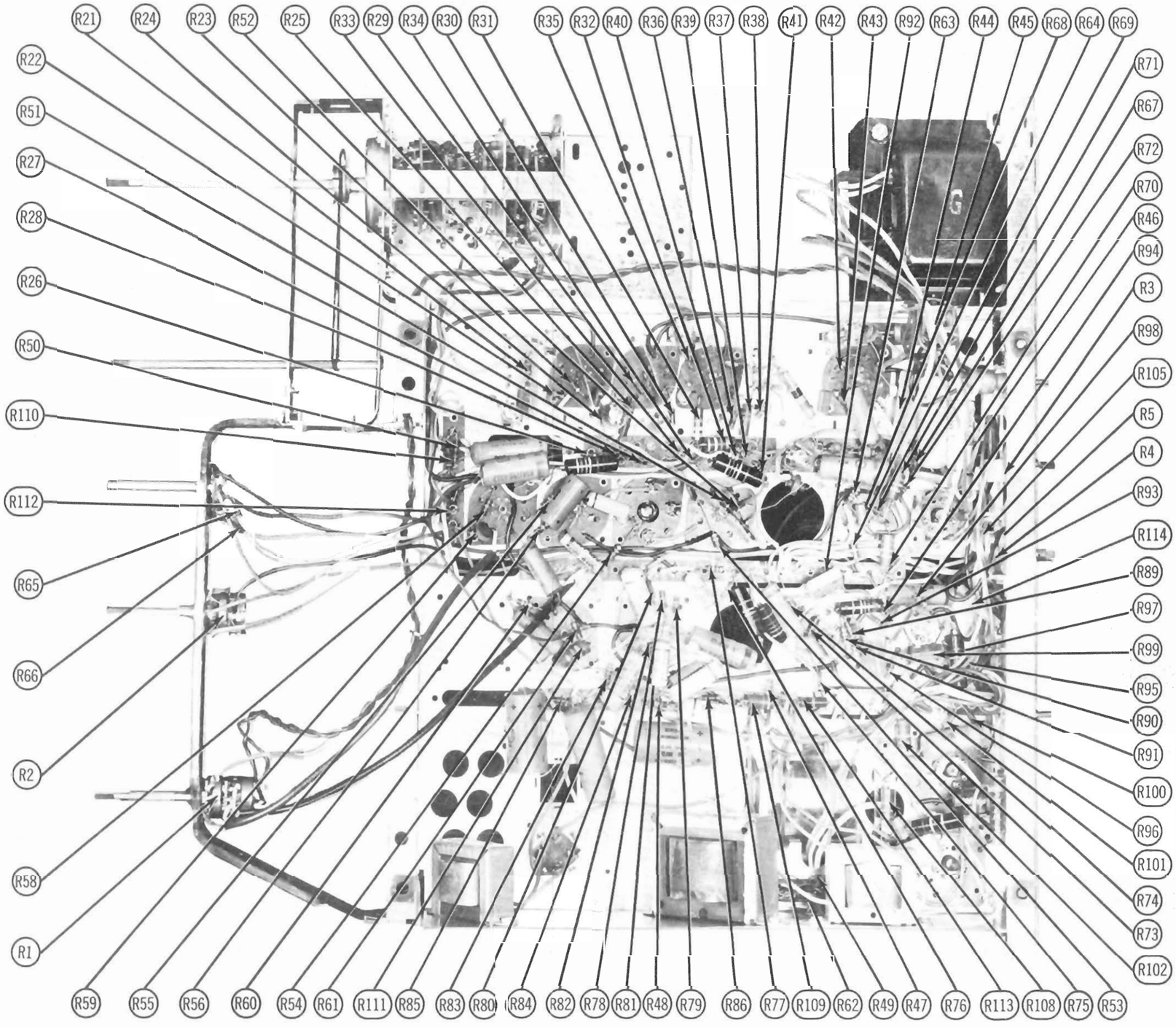

CHASSIS BOTTOM VIEW-RESISTOR IDENTIFICATION

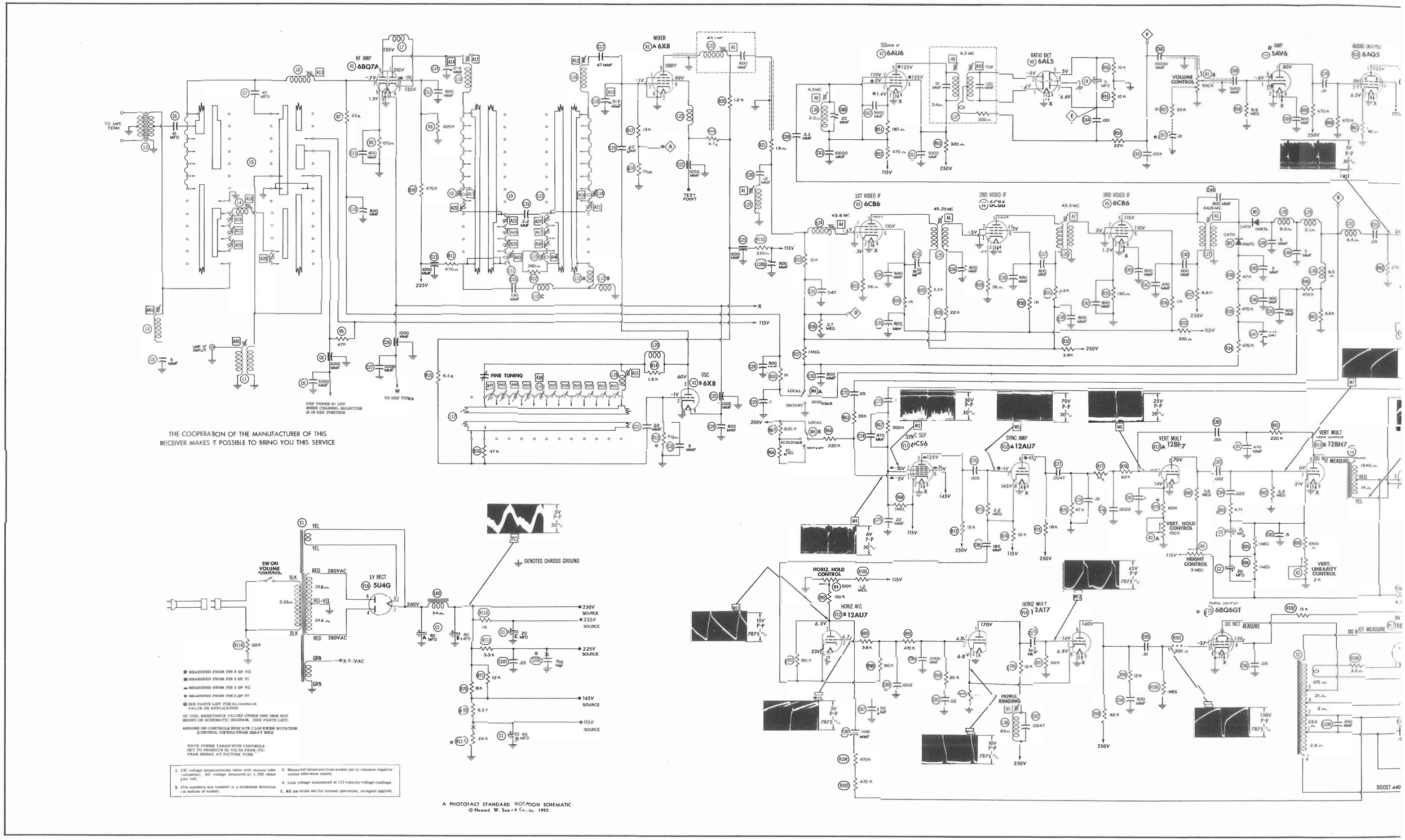
THE COOPERATION OF THE MANUFACTURER OF THIS RECEIVER MAKES IT POSSIBLE TO BRING YOU THIS SERVICE
RF AMP V1 6BQ7A
MIXER V2 A 6X8
OSC V2 B 6X8
SOUND IF V7 6AU6
RATIO DET V8 6AL5
AF AMP 5AV6
AUDIO OUTPUT V9 6AQ5
1ST VIDEO IF V3 6CB6
2ND VIDEO IF V4 6CB6
3RD VIDEO IF V5 6CB6
SYNC SEP V11 6CS6
SYNC AMP V12 A 12AU7
VERT MULT V13 A 12BH7
VERT MULT V13 B 12BH7
HORIZ AFC V12 B 12AU7
HORIZ MULT V14 12AT7
HORIZ. RINGING
OUTPUT 6BQ6GT
LV RECT V18 5U4G
FINE TUNING
VOLUME CONTROL
HORIZ. HOLD CONTROL
VERT. HOLD CONTROL
HEIGHT CONTROL
VERT. LINEARITY CONTROL
TEST POINT
TO ANT. TERM.
UHF IF INPUT
TO UHF TUNER
UHF TUNER B+ 115V WHEN CHANNEL SELECTOR IS IN UHF POSITION
SW ON VOLUME CONTROL
DENOTES CHASSIS GROUND
250V SOURCE
235V SOURCE
225V SOURCE
145V SOURCE
115V SOURCE
DO NOT MEASURE
BOOST 440
A PHOTOFACT STANDARD NOTATION SCHEMATIC
© Howard W. Sams & Co., Inc. 1955

GENERAL ELECTRIC
MODELS 17T20, 21C103, 21C104, 21T22, 21T23, 21T24, 21T25

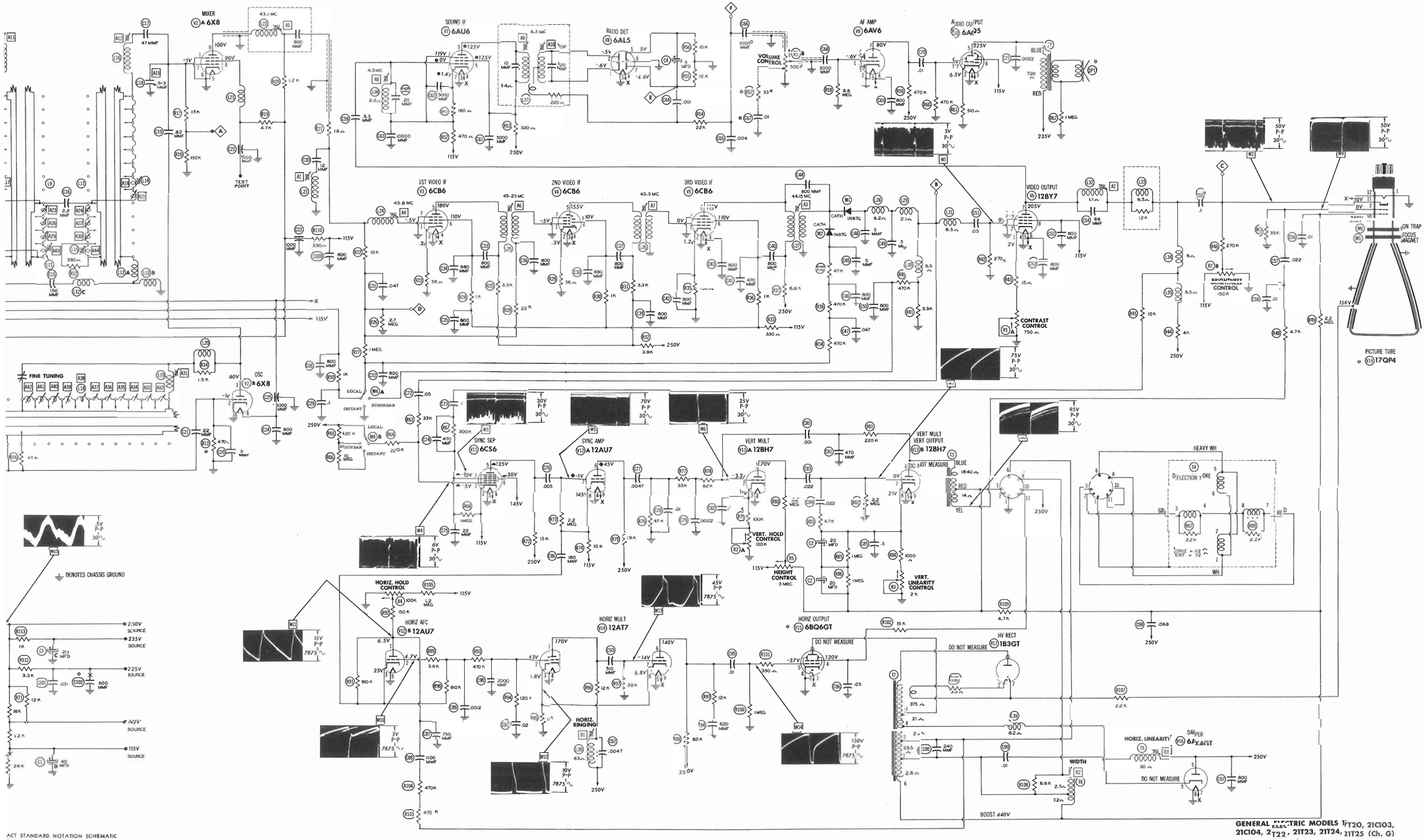

GENERAL ELECTRIC MODELS 17T20, 21C103, 21C104, 21T22, 21T23, 21T24, 21T25 (Ch. G)

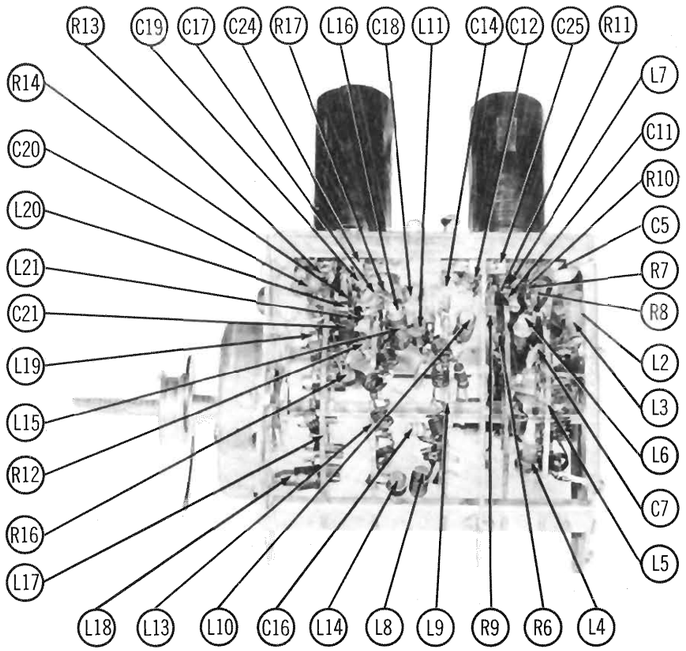

RF TUNER-RIGHT SIDE

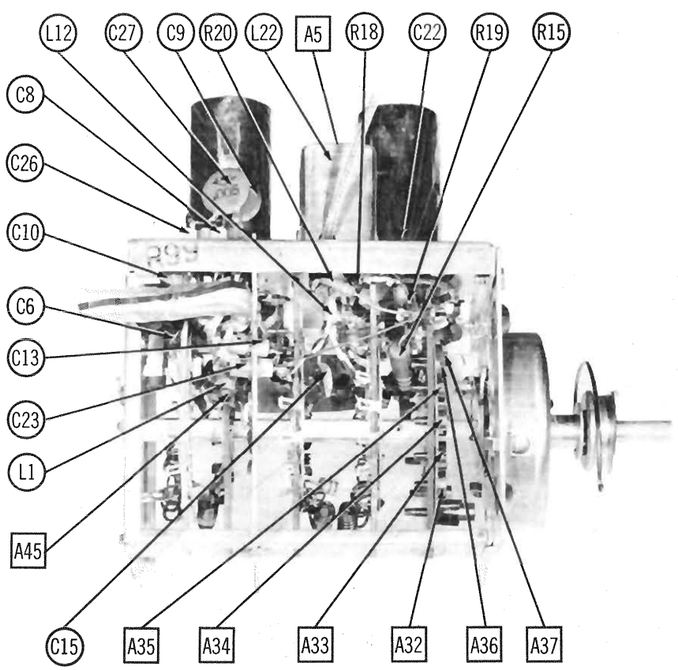

RF TUNER-LEFT SIDE

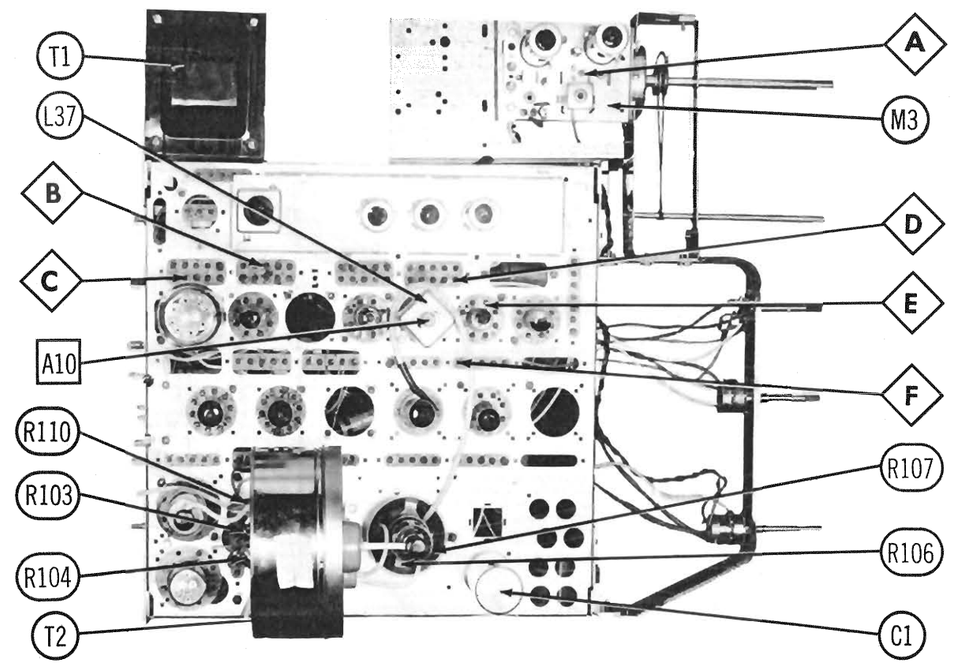

CHASSIS TOP VIEW

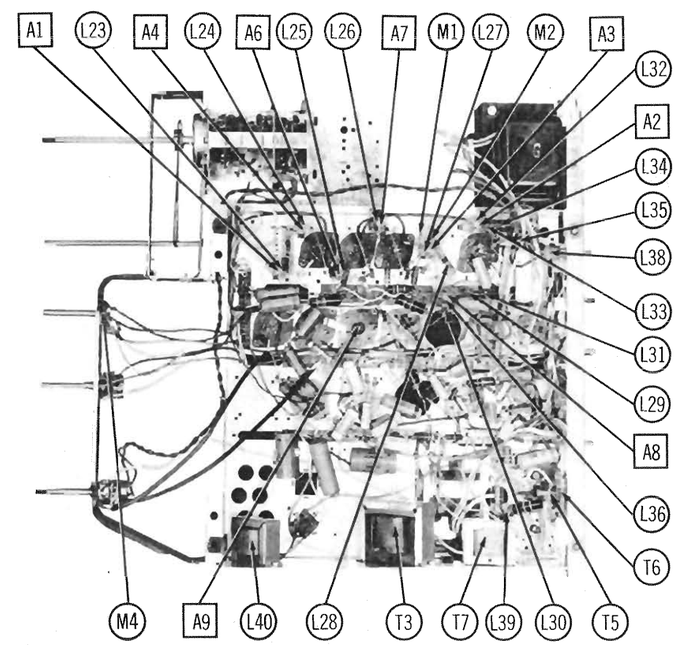

CHASSIS BOTTOM VIEW-TRANS., INDUCTOR AND ALIGNMENT IDENTIFICATION

SET 265 FOLDER 6

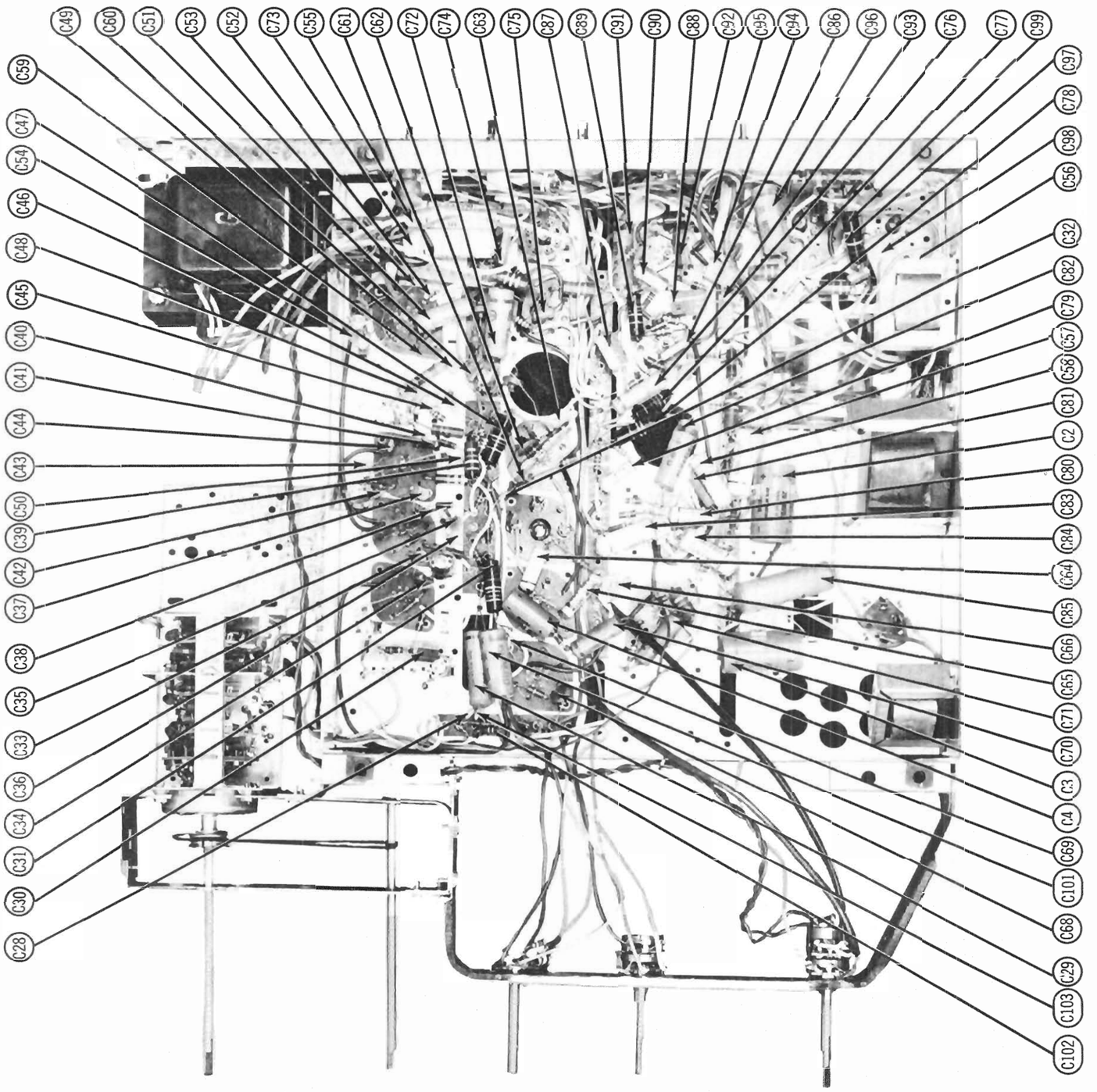

CHASSIS BOTTOM VIEW-CAPACITOR IDENTIFICATION

RESISTANCE MEASUREMENTS

Item	Tube	Pin 1	Pin 2	Pin 3	Pin 4	Pin 5	Pin 6	Pin 7	Pin 8	Pin 9
V 1	6BQ7A	†3.8KΩ	250KΩ	INF	.1Ω	0Ω	INF	■700KΩ	100Ω	0Ω
V 2	6X8	0Ω	470Ω	†22KΩ	.1Ω	0Ω	0Ω	165KΩ	†16KΩ	†14KΩ
V 3	6CB6	1.3Meg	56Ω	0Ω	.1Ω	†7.2KΩ	†13KΩ	0Ω		
V 4	6CB6	1.3Meg	56Ω	0Ω	.1Ω	†7.2KΩ	†13KΩ	0Ω		
V 5	6CB6	.1Ω	180Ω	0Ω	.1Ω	†6.8KΩ	†14KΩ	0Ω		
V 6	12BY7	700Ω	270KΩ	0Ω	0Ω	0Ω	.1Ω	†47KΩ	†13KΩ	0Ω
V 7	6AU6	20KΩ	20KΩ	0Ω	.1Ω	†380Ω	†380Ω	20KΩ		
V 8	6AL5	INF	INF	0Ω	.1Ω	10KΩ	0Ω	10KΩ		
V 9	6AV6	6.8Meg	0Ω	0Ω	.1Ω	INF	INF	†470KΩ		
V 10	6AQ5	470KΩ	500Ω	.1Ω	0Ω	†1.7KΩ	†13KΩ	470KΩ		
V 11	6CS6	†■220KΩ	20KΩ	0Ω	.1Ω	†15KΩ	†7KΩ	1Meg		
V 12	12AU7	†250KΩ	†2.5Meg	†1.3Meg	0Ω	0Ω	†18KΩ	†2.2Meg	†23KΩ	.1Ω
V 13	12BH7	†6Meg	160KΩ	180KΩ	0Ω	0Ω	♦6KΩ	2.2Meg	2KΩ	.1Ω
V 14	12AT7	†12.1KΩ	†3Meg	1KΩ	0Ω	0Ω	†82KΩ	39KΩ	1KΩ	.1Ω
V 15	6BQ6GT	INF	0Ω	INF	†15KΩ	1Meg	INF	.1Ω	0Ω	Top Cap ♦30Ω
V 16	6AX4GT	INF	INF	1Meg	INF	†55Ω	INF	.1Ω	0Ω	
V 17	1B3GT		PINS	1 - 8	HAVE	INFINITE	RESISTANCE			Top Cap ♦405Ω
V 18	5U4G	INF	30KΩ	INF	24Ω	INF	27Ω	INF	30KΩ	
V 19	17QP4	0Ω	33KΩ	Pin 10 ♦2.2Meg	Pin 11 †350KΩ	Pin 12 .1Ω				

† MEASURED FROM PIN 2 OF V18.
■ MEASURED WITH AGC SWITCH IN "LOCAL" POSITION.
♦ MEASURED FROM PIN 3 OF V16.

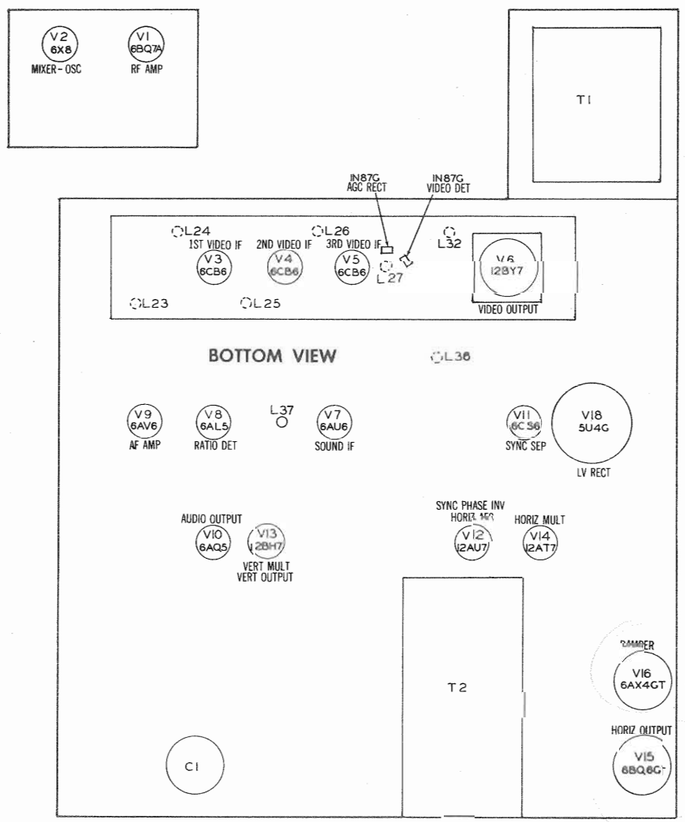

TUBE PLACEMENT CHART

TUBE PLACEMENT CHART

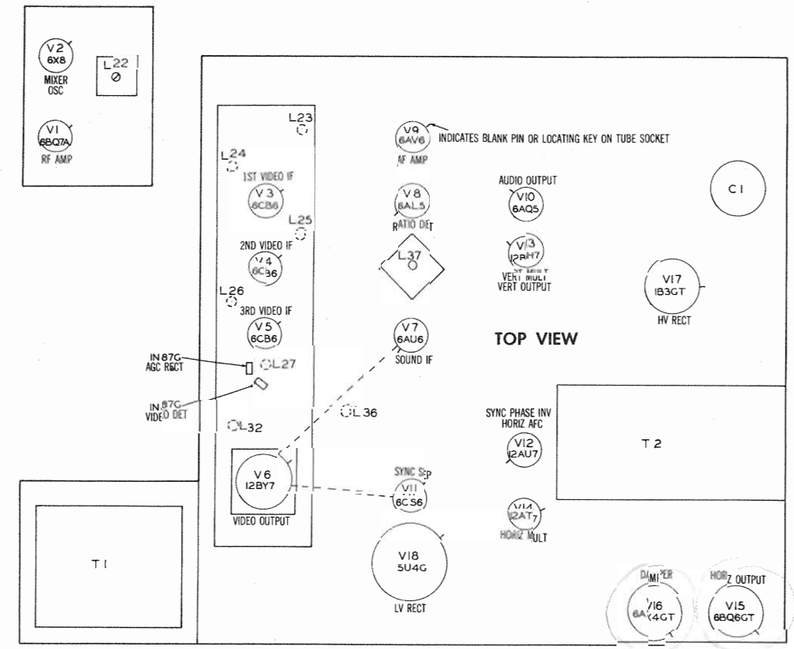

TUBE FAILURE CHECK CHART

The following chart lists tubes whose failures are most likely to produce the indicated symptoms. Refer to tube placement chart for location and type of tube.

POWER SUPPLY FAILURE
No raster, no sound - V18

LOSS OF PICTURE OR SOUND
No pic, no sound, has raster - V2, V3, V4, V5, V6
No pic, no sound, has snow - V1, V2, V3
No pic, has sound, has raster - V6, V19
Has pic, no sound - V7, V8, V9, V10

SYNC FAILURE
No vert. sync - V12, V13
No horiz. sync - V12, V14
No vert. or horiz. sync - V11, V12

SWEEP FAILURE
No raster, has sound - V14, V15, V16, V17, V19
No vertical deflection - V13
Poor vert. linearity or foldover - V13
Poor horiz. linearity or foldover - V14, V15, V16
Narrow picture - V14, V15, V16, V17, V18
Vert. off freq. - V12, V13
Horiz. off freq. - V12, V14

ALIGNMENT INSTRUCTIONS

ALIGNMENT INSTRUCTIONS—READ CAREFULLY BEFORE ATTEMPTING ALIGNMENT

The high voltage shock hazard may be eliminated by removing the horizontal output tube (6BQ6/V15) from its socket. Do not remove the horizontal multivibrator tube (V14) to disable the high voltage.
Allow a 20 minute warm-up period for receiver and test equipment.

TRAP ALIGNMENT

Turn the volume control and area control maximum counter clockwise. Turn the contrast control maximum clockwise.

	DUMMY ANTENNA	SWEEP GENERATOR COUPLING	SWEEP GENERATOR FREQUENCY	MARKER GENERATOR FREQUENCY	CHANNEL	CONNECT SCOPE	ADJUST	REMARKS
1.	.001MFD	High side to point Ⓐ. Low side to chassis.	Not used	47.25MC (400%Mod)	11, 12 or 13	Vert. Amp. thru 10KΩ to point Ⓑ. Low side to chassis.	A1	Adjust for MINIMUM 400% indication on scope. If necessary, increase generator output and use maximum scope gain.
2.	"	High side to point Ⓑ. Low side to chassis.	"	4.5MC (400%Mod)	"	Vert. Amp. thru detector (Fig.1) to point Ⓒ.	A2	"

VIDEO IF ALIGNMENT

Turn the contrast control fully counter clockwise.
Connect the negative lead of a 4.5 volt bias supply to point Ⓓ. Connect the positive lead to chassis.
If during alignment two peaks occur, the correct peak may be obtained by turning the slug fully counter clockwise then clockwise until the first peak appears.
If the receiver is known to be only slightly misaligned, omit "Video IF Alignment" and continue alignment as outlined under "Overall Video IF Response Check".
Use only enough signal generator output to provide usable indication on scope.

	DUMMY ANTENNA	SIGNAL GENERATOR COUPLING	SIGNAL GENERATOR FREQUENCY	CHANNEL	CONNECT VTVM	ADJUST	REMARKS
3.	.001MFD	High side to point Ⓐ. Low side to chassis.	44.15MC (Unmod)	11, 12 or 13	DC probe to point Ⓑ. Common to chassis.	A3	Adjust for maximum deflection.
4.	"	"	43.8MC	"	"	A4	"
5.	"	"	43.1MC	"	"	A5	"
6.	"	"	45.25MC	"	"	A6	"
7.	"	"	43.3MC	"	"	A7	"

OVERALL VIDEO IF RESPONSE CHECK

The channel selector switch should be set to channel 11, 12 or 13. Select the channel (11, 12 or 13) on which the response curve does not change shape when turning the fine tuning control.
Turn contrast control fully counter clockwise.
Leave bias supply connected as under "Video IF Alignment".
Attenuate the sweep generator output so that .75 volt peak to peak on scope provides 2 inches of vertical deflection.
Connect the synchronized sweep voltage from the sweep generator to the horizontal input of the oscilloscope for horizontal deflection.

	DUMMY ANTENNA	SWEEP GENERATOR COUPLING	SWEEP GENERATOR FREQUENCY	MARKER GENERATOR FREQUENCY	CHANNEL	CONNECT SCOPE	ADJUST	REMARKS
8.	.001MFD	High side to point Ⓐ. Low side to chassis.	44MC (10MC Swp)	41.25MC 42.5MC 45.0MC 45.75MC 47.25MC	11, 12 or 13	Vert. Amp. thru 10KΩ to point Ⓑ. Low side to chassis.		Adjust A3 thru A7 to obtain response similar to Fig. 2. A7 positions 41.25MC marker. Adjust A4 and A5 for symmetrical peak region response with 45.75MC marker as shown. Adjust A3 for maximum amplitude symmetrical peak not exceeding 115%.

SOUND IF ALIGNMENT USING AM SIGNAL GENERATOR AND VTVM

If a signal generator providing a 4.5MC signal of crystal accuracy is not available restore the receiver to normal operating condition and tune in a TV station. Connect the VTVM and adjust A8, A9 and A10 as in steps 9 and 10.

	DUMMY ANTENNA	SIGNAL GENERATOR COUPLING	SIGNAL GENERATOR FREQUENCY	CHANNEL	CONNECT VTVM	ADJUST	REMARKS
9.	.01MFD	High side to point Ⓑ. Low side to chassis.	4.5MC (Unmod)	Any unused channel	DC probe to point Ⓔ. Common to chassis.	A8, A9	Adjust for maximum deflection.
10.	"	"	"	"	DC probe to point Ⓕ. Common to chassis.	A10	Adjust for zero reading. A positive and negative reading will be obtained on either side of the correct setting. Repeat steps 9 and 10.

SOUND IF ALIGNMENT USING FM SIGNAL GENERATOR AND OSCILLOSCOPE

Use frequency modulated signal with 60% modulation and 450KC sweep. Use 120% sawtooth voltage in scope for horizontal deflection.

	DUMMY ANTENNA	SWEEP GENERATOR COUPLING	SWEEP GENERATOR FREQUENCY	MARKER GENERATOR FREQUENCY	CHANNEL	CONNECT SCOPE	ADJUST	REMARKS
9.	.01MFD	High side to point Ⓑ. Low side to chassis.	4.5MC (450KC Swp.)	4.5MC	Any unused channel	Vert. Amp. to point Ⓔ. Low side to chassis.	A8, A9	Disconnect stabilizing capacitor C4. Adjust for curve of maximum amplitude and symmetry similar to Fig. 3.
10.	"	"	"	"	"	Vert. Amp. to point Ⓕ. Low side to chassis.	A10	Reconnect stabilizing capacitor C4. Adjust so that 4.5MC occurs at center of crossover lines as in Fig. 4. SLIGHTLY retouch A9 for maximum amplitude and straightness of crossover lines.

RF AND MIXER ALIGNMENT (TUNER RJX-062)

Remove the 300Ω transmission line from tuner input terminals.
Reduce the -4.5 volt bias supply at point Ⓓ to -3 volts.
If L21 requires adjustment (normally, adjustment is not required) the tuner cover must be removed and replaced before and after each adjustment.
Connect the synchronized sweep voltage from the sweep generator to the horizontal input of the oscilloscope for horizontal deflection.
The sweep generator output lead should be terminated with its characteristic impedance, usually 50 ohms.

	DUMMY ANTENNA	SWEEP GENERATOR COUPLING	SWEEP GENERATOR FREQUENCY	MARKER GENERATOR FREQUENCY	CHANNEL	CONNECT SCOPE	ADJUST	REMARKS
11.	Fig. 5	Thru dummy (Fig.5) across primary of antenna input coil (L2).	213MC (15MC Swp)	211.25MC 215.75MC	13	Vert. Amp. thru 10KΩ to point Ⓐ. Low side to tuner chassis.	A11, A12 A13	Adjust for response of maximum amplitude and symmetry similar to Fig.6. If tilt exceeds 15% it may be necessary to compress or expand coil turns of L21. Use insulated tool to prevent shorting B+.
12.	"	"	177MC (15MC Swp)	175.25MC 179.75MC	7	"	A14,A15	Adjust for response similar to Fig.6. If necessary, reposition C12 for maximum gain and equal peaks. SLIGHTLY reposition L8 and L14 (coils whose adjustments are (A17 and A18) to obtain desired coupling. Exercise care so that coils do not contact each other.

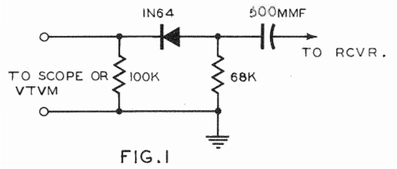

FIG.1

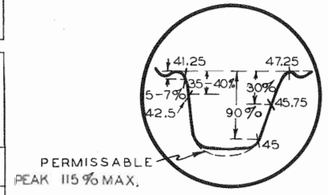

FIG.2

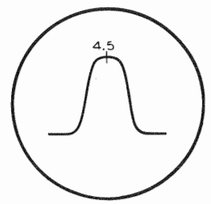

FIG. 3

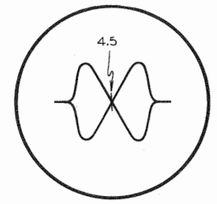

FIG.4

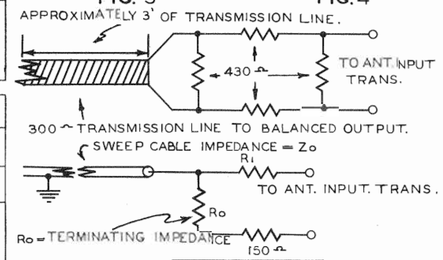

Zo	Ro	R1
50~	56~	120~
72~	82~	110~
92~	110~	100~

FIG.5

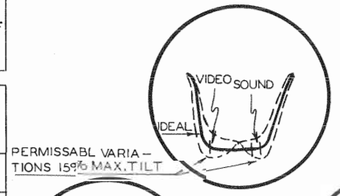

FIG.6

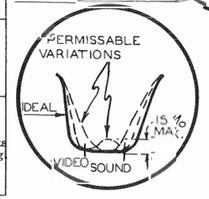

FIG.7

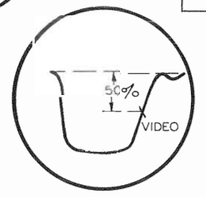

FIG.8

RF AND MIXER ALIGNMENT (TUNER RJX-062) CONT'D

	DUMMY ANTENNA	SWEEP GENERATOR COUPLING	SWEEP GENERATOR FREQUENCY	MARKER GENERATOR FREQUENCY	CHANNEL	CONNECT SCOPE	ADJUST	REMARKS
13.	Fig. 5	Thru dummy (Fig. 5) across primary of antenna input coil (L2).	207MC (15MC Swp)	205.25MC 209.75MC	12	Vert. amp. thru 10KΩ to point Ⓐ. Low side to tuner chassis.		Check for response curve similar to Fig.6. If response is not within limits on any high band channel make compromise adjustments of A1 thru A15 with channel switch set to that channel. Recheck all other high band channels to see that they have not been seriously affected.
			201MC (15MC Swp)	199.25MC 203.75MC	11			
			195MC (15MC Swp)	193.25MC 197.75MC	10			
			189MC (15MC Swp)	187.25MC 191.75MC	9			
			183MC (15MC Swp)	181.25MC 185.75MC	8			
14.	"	"	85MC (15MC Swp)	83.25MC 87.75MC	6	"	A16, A17 A18	Adjust for maximum amplitude flat topped response curve similar to Fig. 7.
15.	"	"	79MC (15MC Swp)	77.25MC 81.75MC	5	"	A19, A20 A21	If necessary, adjust by compressing or expanding coil turns to obtain response similar to Fig. 7.
16.	"	"	69MC (15MC Swp)	67.25MC 71.75MC	4	"	A22,A23 A24	"
17.	"	"	63MC (15MC Swp)	61.25MC 65.75MC	3	"	A25,A26 A27	"
18.	"	"	57MC (15MC Swp)	55.25MC 59.75MC	2	"	A28, A29 A30	"

OSCILLATOR ALIGNMENT (TUNER RJX-062)

Remove the bias battery from point Ⓓ and connect a short jumper from point Ⓓ to chassis.
Set the fine tuning control 2/3 turn from its fully counter clockwise position and leave in this position throughout the entire oscillator alignment.
Connect the synchronized sweep voltage from the sweep generator to the horizontal input of the oscilloscope for horizontal deflection.
The sweep generator output lead should be terminated with its characteristic impedance, usually 50 ohms.

	DUMMY ANTENNA	SWEEP GENERATOR COUPLING	SWEEP GENERATOR FREQUENCY	MARKER GENERATOR FREQUENCY	CHANNEL	CONNECT SCOPE	ADJUST	REMARKS
19.	Fig. 5	Thru dummy (Fig. 5) across primary of antenna input coil (L2)	213MC (10MC Swp)	211.25MC	13	Vert. Amp. thru 10KΩ to point Ⓑ. Low side to chassis.	A31	Adjust to place video marker at 50% on response curve as in Fig. 8.
			207MC (10MC Swp)	205.25MC	12		A32	
			201MC (10MC Swp)	199.25MC	11		A33	
			195MC (10MC Swp)	193.25MC	10		A34	
			189MC (10MC Swp)	187.25MC	9		A35	
			183MC (10MC Swp)	181.25MC	8		A36	
			177MC (10MC Swp)	175.25MC	7		A37	
			85MC (10MC Swp)	83.25MC	6		A38	
			79MC (10MC Swp)	77.25MC	5		A39	
			69MC (10MC Swp)	67.25MC	4		A40	
			63MC (10MC Swp)	61.25MC	3		A41	
			57MC (10MC Swp)	55.25MC	2		A42	

UHF 44MC ALIGNMENT

Connect a short jumper from point Ⓓ to chassis. Leave fine tuning control set as under "Oscillator Alignment".
Switch channel selector to "UHF" position.

	DUMMY ANTENNA	SWEEP GENERATOR COUPLING	SWEEP GENERATOR FREQUENCY	MARKER GENERATOR FREQUENCY	CHANNEL	CONNECT SCOPE	ADJUST	REMARKS
20.	Fig.5	Thru dummy (Fig.5) across UHF input jack.	44MC (10MC Swp)	40.25MC 45.75MC	UHF	Vert. Amp. thru 10KΩ to point Ⓑ. Low side to chassis.	A43,A44 A45	Adjust for response similar to Fig. 8 with video marker at 50%. A43 and A44 affects curve shape. Adjust A45 for maximum amplitude. The spacing between coils whose adjustment is A43 and A44 affects band width. If necessary, reposition these coils. Exercise care so that the coils do not contact each other. Remove the jumper from point Ⓓ to chassis.

UHF TUNER ALIGNMENT

The UHF tuner has been properly aligned at the factory and is very stable. Alignment of this portion of the receiver is not recommended in the field.

VHF IF TRAP ALIGNMENT

The IF trap (A46) may be aligned by tuning in the station on which the interference occurs and adjusting A46 for minimum interference in the picture. Be careful not to adjust A46 so that it attenuates channel 2 response.
If the frequency of the interfering signal is known, the trap may be adjusted as in step 21.

	DUMMY ANTENNA	SWEEP GENERATOR COUPLING	SWEEP GENERATOR FREQUENCY	MARKER GENERATOR FREQUENCY	CHANNEL	CONNECT SCOPE	ADJUST	REMARKS
21.	Fig. 5	Thru dummy (Fig.5) across antenna terminals	44MC (10MC Swp)	Set to freq. of interfering signal	2	Vert. Amp. thru 10KΩ to point Ⓑ. Low side to chassis.	A46	Connect the negative lead of a 3 volt bias battery to point Ⓓ. Connect the positive lead to chassis. Adjust for minimum marker amplitude. Remove bias battery.

GENERAL ELECTRIC
MODELS 17T20, 21C103, 21C104, 21T22, 21T23, 21T24, 21T25

SERVICING IN THE FIELD

TUNER OSCILLATOR ADJUSTMENTS

Touch-up adjustments of the VHF tuner oscillator circuit may be accomplished by removing the channel selector and fine tuning knobs.

PICTURE TUBE SAFETY GLASS CLEANING

To clean safety glass, remove 2 hole covers from corner brackets at the two top corners of the safety glass. Remove screws under covers. Remove brackets and safety glass. Use extreme caution when removing safety glass.

PICTURE TUBE REMOVAL

For picture tube removal it is necessary to remove chassis. (See disassembly instructions).

SERVICE ADJUSTMENT LOCATION

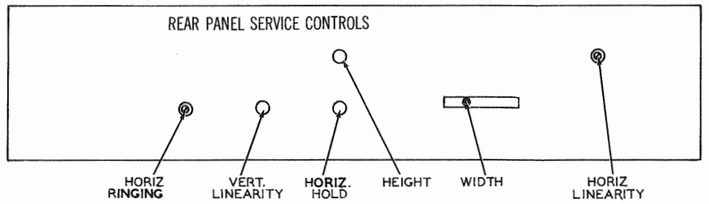

HORIZONTAL OSCILLATOR FIELD ADJUSTMENT

Adjustment of the horizontal oscillator circuit can be made from the rear panel of the chassis. Set the horizontal hold control at the mid-position of its range and adjust the horizontal ringing coil slug (L38) until the picture synchronizes horizontally.

SOUND IF DETECTOR BUZZ ADJUSTMENT

To eliminate sound IF detector buzz, adjust the ratio detector secondary (L37) located on top of chassis. (See tube placement chart).

CENTERING

Centering is accomplished mechanically by means of a centering lever on the PM focusing assembly. Adjust the centering lever from side to side, and up and down until the picture is properly centered.

DISASSEMBLY INSTRUCTIONS

1. Remove 8 push-on type control knobs from front panel.
2. Remove 2 metal screws and 1 nut from rear cover. Remove rear cover.
3. Remove speaker leads from speaker. Remove 4 nuts from speaker. Remove speaker.
4. Remove HV lead from picture tube. Disconnect deflection yoke socket and picture tube socket.
5. Remove 4 chassis bolts and transformer mounting nut from underside of cabinet. Remove chassis.

PICTURE TUBE REMOVAL

1. Remove chassis.
2. Remove 2 nuts from underside of cabinet.
3. Remove 2 nuts from top front tube mount.
4. Remove tube harness and yoke assembly .
5. Loosen nut located on underside of front tube mounting band.
6. Remove picture tube from harness assembly.

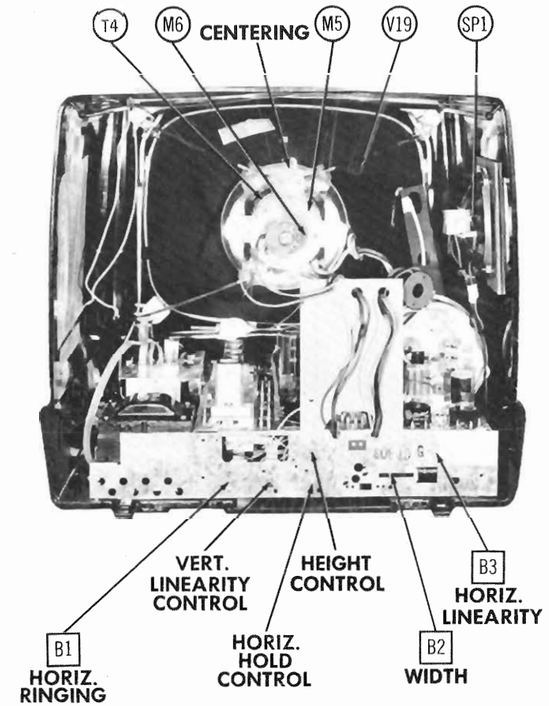

CABINET—REAR VIEW

HORIZONTAL SWEEP CIRCUIT ADJUSTMENTS

Replace the horizontal output tube (V15) in its socket.

Turn the set on and tune in a TV station, preferably a test pattern.

If the picture does not hold sync throughout the complete range of the horizontal hold control, adjust as follows:

1. Replace V12 (12AU7) with a 12AU7 that has pins 1, 2 and 3 clipped off. If a dummy 12AU7 is not available connect a jumper from the center arm of the horizontal hold control to the ungrounded side of C89.
2. Set the horizontal hold control to its mid-range position and adjust the horizontal ringing coil slug (B1) for best sync. Picture will drift slowly from side to side.
3. Turn the horizontal hold control clockwise and note the number of diagonal bars present on the screen. Turn the horizontal hold control fully counter clockwise and again note the number of diagonal bars is the same at both extreme settings of the horizontal hold control.
4. Replace the original 12AU7 in its socket or remove the jumper from the horizontal hold control to C89.

Simultaneously adjust the width coil (B2) and the horizontal linearity coil (B3) until the picture is symmetrical from left to right. The picture should be slightly wider than necessary to fill the picture mask horizontally.

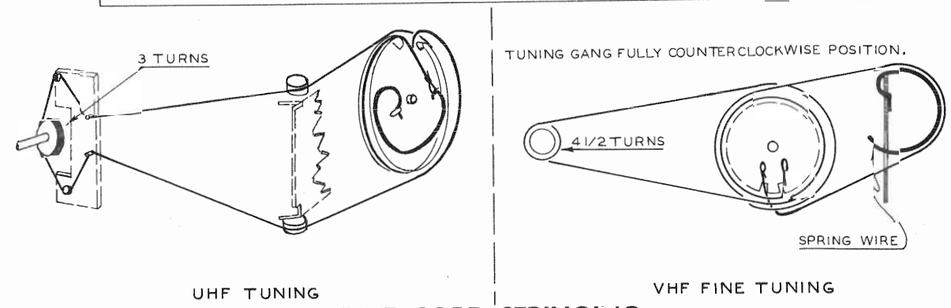

DRIVE CORD STRINGING

SET 265 FOLDER 6

TROUBLE SHOOTING AIDS

SWEEP

HORIZONTAL

LOSS OF SWEEP

Follow procedure outlined under "Loss of High Voltage".

INSUFFICIENT SWEEP

Check by substitution V15, V16 and V18. Check R102, R99, C94, C95, T2, T4A and other associated components. Check adjustments B2 and B3.

DRIVE LINES

Check by substitution V15 and V16. Check adjustments B2 and B3. Check C95, R102 and other associated components.

COMPRESSED LEFT SIDE

Check by substitution V15 and V16. Check horizontal output and damper stages for component failure or change of value.

FOLDS

Follow procedure outlined under "Drive Lines".

PIE CRUST EFFECT

Check by substitution V14, V15 and V16. Check C90 for open. Check C92, L38, R95 and other associated components.

XMAS TREE EFFECT

Check by substitution V14, V15 and V16. Check T2, T4A for internal arcing. Check L38, C92, C93, C91, R96, R98 and other associated components.

VERTICAL

LOSS OF SWEEP

Substitute V13. Check waveform W7.

If Satisfactory	If Unsatisfactory
Check T3, T4B, R109, C3, C2 and other associated components.	Check C83, C81, R81, R2A and other associated components.

INSUFFICIENT SWEEP

Substitute V13. Check height and vertical linearity controls for proper operation. Check T3 and T5A.

COMPRESSED AT BOTTOM

Substitute V13. Check R5, R80, C83 and other associated components.

COMPRESSED AT TOP

Substitute V13. Check R84, R3, C85 and other associated components.

FOLDS

Substitute V13. Check C84, R83, R84, R3 and other associated components.

SYNC

LOSS OF VERTICAL AND HORIZONTAL SYNC

Check by substitution V11 and V12. Check C72, C73, C76, R72, R70, R71 and other associated components.

LOSS OF VERTICAL SYNC-HORIZONTAL SYNC SATISFACTORY

Check by substitution V12A and V13. Check the vertical integrator network. Check R2A, R79, C82 and other associated components.

LOSS OF HORIZONTAL SYNC-VERTICAL SYNC SATISFACTORY

Check by substitution V12 and V14. Check C86, C87, L38, C92 and other components associated with V14.

HORIZONTAL BENDING

Check by substitution V11, V12 and V14. Check horizontal AFC network.

VIDEO

LOSS OF VIDEO

Substitute V6. Check C55, C52, R44, L35, L33 and other associated components.

SOUND BARS (4.5MC BEAT)

Adjust tuner fine tuning for best sound and picture. Check adjustment A2. Check video IF alignment.

POOR CONTRAST

Substitute V6. Check video crystal detector network. Check contrast control and picture tube. Check L30, L31, C51 and other associated components.

NEGATIVE PICTURE

Substitute V6. Check video detector network. Check picture tube. Check C55, C51, L33 and other associated components.

SMEAR

Substitute V6. Check L29, L30, L31, L33, C55 and other associated components.

WIDE BLACK BAR ACROSS PICTURE

Check by substitution V1, V3, V4, V5 and V6 for heater to cathode leakage.

AUDIO

WEAK OR NO SOUND

Check by substitution V7, V8, V9 and V10. Check stages V9 and V10 using audio signal generator. Apply audio signal across R1B.

If Satisfactory	If Unsatisfactory
Check ratio detector and audio IF stages for component failure or change of value.	Check C66, C68, C70, C71, R59, R61, T7, speaker and other associated components.

BUZZ

Adjust tuner fine tuning for best sound and picture. Check adjustment A10 and C4. If still unsatisfactory, check audio IF alignment.

DISTORTED

Follow procedure outlined under "Weak or No Sound".

POWER

DEAD SET

If filaments fail to light, check AC interlock assembly. Check switch on volume control and T1. If filaments light, substitute V18. Check B+ filter and decoupling network.

SMALL AND/OR DIM PICTURE

Substitute V18. Check B+ filter and decoupling network.

TROUBLE SHOOTING AIDS (cont)

HIGH VOLTAGE

LOSS OF HIGH VOLTAGE

Check by substitution V14, V15, V16 and V17. Check waveform W14.

If Satisfactory	If Unsatisfactory
Check T2, T4A, T5, T6, C100, C99, C98, C96, R103 and other associated components.	Check L38, C92, C93, C95, R99, R96, R95 and other associated components.

INSUFFICIENT HIGH VOLTAGE

Check by substitution V15, V16 and V18. Check T2, T4A, C98, C95, R102 and other associated components.

BLOOMING

Check by substitution V15, V16, V17 and V18. Check R107, R102, T2 and T4A.

GENERAL

RASTER, SOUND, NO PICTURE

Follow procedure outlined under "Loss of Video".

RASTER, PICTURE, NO SOUND

Follow procedure outlined under "Weak or No Sound".

RASTER, NO SOUND, NO PICTURE

Check by substitution V1, V2, V3, V4, V5 and V6. Check video IF components for failure or change of value.

NO RASTER, NO SOUND

Follow procedure outlined under "Dead Set".

KEYSTONE EFFECT

Check T4 and its associated components.

INTERMITTENT STREAKS

Check high voltage section for corona discharge and arcing.

Symptoms shown are assumed and are not indicative of the quality and workmanship of this equipment.

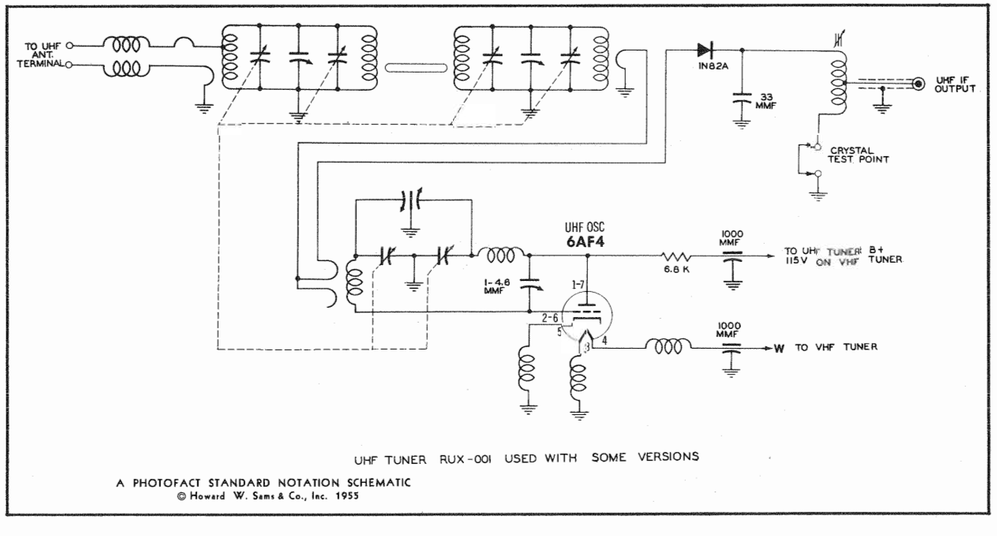

UHF TUNER SCHEMATIC

PARTS LIST AND DESCRIPTIONS (Continued)

MISCELLANEOUS

ITEM No.	PART NAME	General Electric PART No.	NOTES
M3	Tuner	RJX-065	VHF
	Tuner	RUX-001	UHF
M4	Switch	RSW-106	AGC
M5	Focus Magnet	RLF-066	Includes centering device- Models 21T24, 21T24, 21C103 and 21C104
	Focus Magnet	RLF-065	Includes centering device - Models 17T20, 21T22 and 21T23
M6	Ion Trap	RET-013	
	Cabinet	RAU-410	Model 21T22
	Cabinet	RAU-411	Model 21T23
	Cabinet	RAU-412	Model 17T20
	Cabinet	RAV-236	Model 21T24
	Cabinet	RAV-237	Model 21T25
	Cabinet	RAV-242	Model 21C103
	Cabinet	RAV-243	Model 21C104
	Knob	RDK-403	Contrast - Models 17T20, 21T22, 21T23, 21T24 and 21C103
	Knob	RDK-414	Contrast - Models 21T25, 21C104
	Knob	RDK-404	On-Off-Volume - Models 17T20, 21T22, 21T24 and 21C103
	Knob	RDK-413	On-Off-Volume - Models 21T25, 21C104
	Knob	RDK-405	Brightness or UHF Fine Tuning - Models 17T20, 21T22, 21T23, 21T24 and 21C103
	Knob	RDK-416	Brightness or UHF Fine Tuning - Models 21T25, 21C104
	Knob	RDK-406	Vertical or Fine Tuning - Models 17T20, 21T22, 21T24, 21C103 and 21T23
	Knob	RDK-415	Vertical or Fine Tuning - Models 21T25, 21C104
	Knob	RDK-408	VHF Channel Selector - Brown - Models 17T20, 21T22, 21T23, 21T24 and 21C103
	Knob	RDK-419	VHF Channel Selector - Fawn - Models 21T25, 21C104
	Knob	RDK-411	VHF Channel Selector with UHF - Brown - Models 17T20, 21T22, 21T23, 21T24 and 21C103
	Knob	RDK-421	VHF Channel Selector with UHF - Fawn - Models 21T25, and 21C104
	Knob	RDK-423	On-Off-Volume - Model 21T23
	Knob	RDK-434	VHF Channel Selector - Brown - Model 21T23
	Knob	RDK-436	VHF Channel Selector with UHF - Brown - Model 21T23
	Knob	RDK-430	UHF Indicator - Brown - Models 17T20, 21T22, 21T23, 21T24 and 21C103
	Knob	RDK-432	UHF Indicator - Fawn - Models 21T25 and 21C104
	Knob	RDK-442	AGC - Model 21T22
	Knob	RDK-443	AGC - Model 21T23
	Safety Glass	RDW-067	Models 21T24, 21T25, 21C103 and 21C104
	Safety Glass	RDW-070	Model 21T22
	Safety Glass	RDW-071	Model 17T20
	Safety Glass	RDW-074	Model 21T23
	Mask	RDM-049	Models 21T24 and 21C103
	Mask	RDM-050	Models 21T25 and 21C104

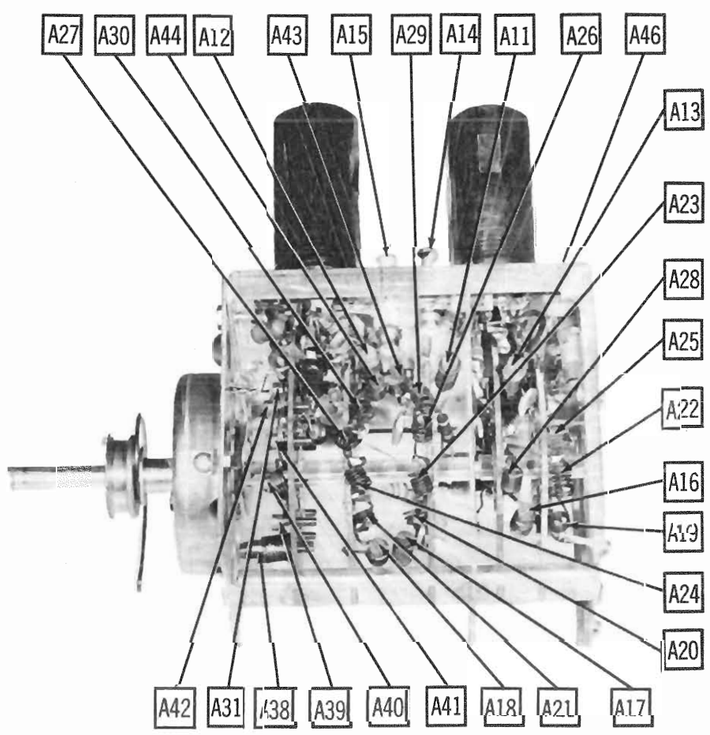

RF TUNER ALIGNMENT IDENTIFICATION

PARTS LIST AND DESCRIPTIONS

TUBES (SYLVANIA, GENERAL ELECTRIC, WESTINGHOUSE)

ITEM No.	USE	REPLACEMENT DATA: General Electric PART No.	REPLACEMENT DATA: STANDARD REPLACEMENT	RETMA BASE TYPE	NOTES
V1	RF Amp.	6BQ7A	6BQ7A	9AJ	
V2	Mixer - Osc.	6X8	6X8	9AK	
V3	1st Video IF Amp.	6CB6	6CB6	7CM	
V4	2nd Video IF Amp.	6CB6	6CB6	7CM	
V5	3rd Video IF Amp.	6CB6	6CB6	7CM	
V6	Video Output	12BY7	12BY7	9BF	
V7	Sound IF Amp.	6AU6	6AU6	7BK	
V8	Ratio Detector	6AL5	6AL5	6BT	
V9	AF Amp.	6AV6	6AV6	7BT	
V10	Audio Output	6AQ5	6AQ5	7BZ	
V11	Sync Sep.	6CS6	6CS6	7CH	
V12	Sync Phase Inv. - Horiz. AFC	12AU7	12AU7	9A	
V13	Vert. Mult. - Vert. Output	12BH7	12BH7	9A	
V14	Horiz. Mult.	12AT7	12AT7	9A	
V15	Horiz. Output	6BQ6GT	6BQ6GT	6AM	6BQ6GA used in later versions.
V16	Damper	6AX4GT	6AX4GT	4CG	
V17	HV Rect.	1B3GT	1B3GT	3C	
V18	LV Rect.	5U4G	5U4G	5T	

CATHODE-RAY TUBE

ITEM No.	REPLACEMENT DATA: General Electric PART No.	REPLACEMENT DATA: CBS-HYTRON PART No.	REPLACEMENT DATA: GENERAL ELECTRIC PART No.	REPLACEMENT DATA: SYLVANIA PART No.	REPLACEMENT DATA: WESTINGHOUSE PART No.	RETMA BASE TYPE	NOTES
V19	17QP4 21ZP4A 21ZP4B 21ARP4	17QP4 21ZP4A 21ZP4B	17QP4 21ZP4A 21ZP4B	17QP4 21ZP4A 21ZP4B 21ZP4 ①	17QP4 21ZP4A 21ZP4B	12N 12N 12N 12D	① Circuit change necessary

CAPACITORS

Capacity values given in the rating column are in mfd. for Electrolytic and Paper Capacitors, and in mmfd. for Mica and Ceramic Capacitors.

ITEM No.	RATING CAP.	RATING VOLT	General Electric PART No.	AEROVOX PART No.	CENTRALAB PART No.	CORNELL-DUBILIER PART No.	ERIE PART No.	MALLORY PART No.	SPRAGUE PART No.	NOTES
C1A	■60	350	RCE-173	AFH3-29				FP378	TVL-3640	
B	▲80	350		PRS450/40-40				TC68	TVA-1716	
C	▲20	350								
D	40	300								
C2	20	300	RCE-175	PRS450/20		BR2035		TC65	TVA-1608	
C3	20	300	RCE-175	PRS450/20		BR2035		TC65	TVA-1608	
C4	[illegible]	[illegible]	RCE-174	PRS150/4		BR550		TC30	TVA-1303	
C5	5		RCW-3146	SI5NP0	TCZ-4.7	Z011	NP0K-050	ZT-555	5TCCB-V47	
C6	10		RCW-3144	SI10	D6-100	G018	GP1K-100	[illegible]	5GA-Q1	
C7	47		RCW-3145	EPD-000047	D6-470	G033	801-470	JC-5447	5GA-Q47	
C8	1000		RCW-3095	ESF-001	MFT-1000				[illegible]-D1	
C9	5000		RCW-3015	BPD-005	DD-502	K080	811-005	DC-525	5HK-D5	
C10	800		RCW-3037	BPD-0008	DD-801	K069	801-001	DC-521	5HK-D1	
C11	800		RCW-3037	BPD-0008	DD-801	K069	801-001	DC-521	5HK-D1	
C12	800		RCW-3037	BPD-0008	DD-801	K069	801-001	DC-521	5HK-D1	
C13	1000		RCW-3095	ESF-001	MFT-1000				503C-D1	
C14	.5-3		RCY-080		829-3		3115-01-0R5	CT565A		
C15	150		RCW-3148	BPD-00015	D6-151	G046	GP2K-151	UC-5315	5GA-T15	
C16	2.2		RCW-3147	SI2.2NP0	TCZ-2.2	Z008	NP0K-2R2		5TCCB-V22	
C17	47		RCW-3145	BPD-000047	D6-470	G033	801-470	UC-5447	5GA-Q47	
C18	.5-3		RCY-080		829-3		3115-01-0R5	CT565A		
C19	.82									
C20	5		RCW-3151							
C21	22		RCW-3150							
C22	1000		RCW-3095	ESF-001	MFT-1000				503C-D1	
C23	1000		RCW-3095	ESF-001	MFT-1000				503C-D1	
C24	800		RCW-3037	BPD-0008	DD-801	K069	801-001	DC-521	5HK-D1	
C25	1000		RCW-3095	ESF-001	MFT-1000				503C-D1	
C26	1000		RCW-3095	ESF-001	MFT-1000				503C-D1	
C27	5000		RCW-3015	BPD-005	DD-502	K080	811-005	DC-525	5HK-D5	
C28	800		RCW-3037	BPD-0008	DD-801	K069	801-001	DC-521	5HK-D1	
C29	.1	200	UCC-013	P288-104	DF-104	CUB2P1		PT401	2TM-P1	
C30	12	500		469-120		22R5Q12				
C31	.047	200	UCC-011	P288-047	DF-503	CUB2S47		PT4147	2TM-S47	
C32	800		RCW-3037	BPD-0008	DD-801	K069	801-001	DC-521	5HK-D1	
C33	800		RCW-3037	BPD-0008	DD-801	K069	801-001	DC-521	5HK-D1	
C34	680		RCW-3051	SI680	D6-681	TP50	GP2K-681	JC-5368	5GA-T68	
C35	800		RCW-3037	BPD-0008	DD-801	K069	801-001	DC-521	5HK-D1	
C36	800		RCW-3037	BPD-0008	DD-801	K069	801-001	DC-521	5HK-D1	
C37	800		RCW-3037	BPD-0008	DD-801	K069	801-001	DC-521	5HK-D1	
C38	680		RCW-3051	SI680	D6-681	TP50	GP2K-681	JC-5368	5GA-T68	
C39	800		RCW-3037	BPD-0008	DD-801	K069	801-001	DC-521	5HK-D1	
C40	800		RCW-3037	BPD-0008	DD-801	[illegible]	801-001	DC-521	5HK-D1	
C41	470		[illegible]	SI470	D6-471		GP1K-471	UC-5347	5GA-T47	
C42	800		RCW-3037	BPD-0008	DD-801	K069	[illegible]-001	DC-521	5HK-D1	
C43	800		RCW-3037	BPD-0008	DD-801	K069	801-001	DC-521	5HK-D1	
C44	800		RCW-3037	BPD-0008	DD-801	K069	801-001	DC-521	5HK-D1	
C45	5		RCW-3115	SI5NP0	TCZ-4.7	Z011	NP0K-050	ZT-555	5TCCB-V47	
C46	800		RCW-3037	BPD-0008	DD-801	K069	801-001	DC-521	5HK-D1	
C47	.047	200	UCC-011	P288-047	DF-503	CUB2S47		PT4147	2TM-S47	
C48	5		RCW-3115	SI5NP0	TCZ-4.7	Z011	NP0K-050	ZT-555	5TCCB-V47	
C49	5		UCG-1005	SI5NP0	TCZ-4.7	Z011	NP0K-050	ZT-555	5TCCB-V47	
C50	800		RCW-3037	BPD-0008	DD-801	K069	801-001	DC-521	5HK-D1	
C51	.05	200	RCC-105	P288-05	DF-503	CUE6S5		PT615	6TM-S5	
C52	800		RCW-3037	BPD-0008	DD-801	K069	801-001	DC-521	5HK-D1	
C53	800		RCW-3037	BPD-0008	DD-801	K069	801-001	DC-521	5HK-D1	
C54	68	500	UCG-2024	469-680		22R5Q68			MS-47	
C55	.1	600	RCN-031	P688-1	DF-104	CUB6P1		PT601	6TM-P1	
C56	.01	1000	RCN-030	P1088-01	DD16-103	CUB16S1		PT1611	MB-S1	
C57	.022	1000	RCN-050	P1088-022		CUB16S22		PT16122	MB-S22	
C58	.01	1000	RCN-030	P1088-01	DD16-103	CUB16S1		PT1611	MB-S1	
C59	3.3	500								
C60	20	500	RCG-001	469-200		22R5Q2			MS-42	

SET 265 FOLDER 6

PARTS LIST AND DESCRIPTIONS (Continued)

CAPACITORS (cont)

ITEM No.	RATING CAP.	RATING VOLT	General Electric PART No.	AEROVOX PART No.	CENTRALAB PART No.	CORNELL-DUBILIER PART No.	ERIE PART No.	MALLORY PART No.	SPRAGUE PART No.	NOTES
C61	5000		RCW-3014	BPD-005	DD-502	K080	811-005	DC-525	5HK-D5	
C62	5000		RCW-3014	BPD-005	DD-502	K080	811-005	DC-525	5HK-D5	
C63	10000		RCW-3054	BPD-01	DD-103	K082	811-01	DC-511	5HK-S1	
C64	.001	600	RCC-119	P688-001	D6-102	CUB6D1	GP21-102	PT621	6TM-D1	
C65	.004	200	UCC-004	P688-004	D6-402	CUB6D4	GP2-333-402	PT624	6TM-D4	
C66	10000		RCW-3054	BPD-01	DD-103	K082	811-01	DC-511	5HK-S1	
C67	.01	600	RCN-025	P688-01	D6-103	CUB6S1	GP2-333-103	PT611	6TM-S1	Note 1
C68	5000		RCW-3014	BPD-005	DD-502	K080	811-005	DC-525	5HK-D5	
C69	800		RCW-3037	BPD-0008	DD-801	K069	801-001	DC-521	5HK-D1	
C70	.01	600	RCC-040	P688-01	D6-103	CUB6S1	GP2-333-103	PT611	6TM-S1	
C71	.0022	1000	RCC-056	P1088-0022		CUB16D22		PT6222	MB-D22	
C72	.05	600	UCC-045	P688-05	DF-503	CUB6S5		PT615	6TM-S5	
C73	.1	600	RCN-031	P688-1	DF-104	CUB6P1		PT601	6TM-P1	
C74	470	500	RCU-315	1468-471	D6-471	5W5T47	GP2K-471	MC245	1FM-35	
C75	22	500		1469-220		22R5Q22		MCE220	MS-42	
C76	.005	600	UCC-039	P688-005	D6-502	CUB6D5	GP2-333-502	PT625	6TM-D5	
C77	.0047	600	RCN-031	P688-0047	D6-472	CUB6D47	GP2-333-472	PT6247	6TM-D47	
C78	.01	600	RCN-025	P688-01	D6-103	CUB6S1	GP2-333-103	PT611	6TM-S1	
C79	.0022	600	RCN-060	P688-0022	D6-222	CUB6D22	GP2-333-222	PT6222	6TM-D22	
C80	.001	600	RCN-062	1464-102		1R5D1		MCB255	MS-21	
C81	470	1000	RCU-337							
C82	.1	200	UCC-013	P288-1	DF-104	CUB2P1		PT401	2TM-P1	
C83	.022	600	RCN-050	P688-022	DF-203	CUB6S22	817-02	PT6122	6TM-S22	
C84	.022	600	RCN-050	P688-022	DF-203	CUB6S22	817-02	PT6122	6TM-S22	
C85	.5	200	RCC-016	P288-5		CUB2P5		PT405	2TM-P5	
C86	180	500		1469-181		5R5T18				
C87	750	500	UCG-3049	1469-751		5R5T75				
C88	1100	1000	RCU-317	1464-112		1R5D11				
C89	.0012	600	RCC-115	1464-122		1R5D12				
C90	2000	500	RCU-319	1464-202		1R5D2		MCB457	MS-22	
C91	.02	600	RCN-050	P688-02	DF-203	CUB6S2	817-02	PT612	6TM-S2	
C92	.0047	600	RCN-083	1464-472		1R5D47			MS-25	
C93	510	500	UCG-2045	1469-511		5R5T51				
C94	620	500	RCU-316	1469-621		5R5T62				
C95	.01	600	RCN-063	P688-01	D6-103	CUB6S1	GP2-333-103	PT611	6TM-S1	
C96	.05	600	UCC-045	P688-05	DF-503	CUB6S5		PT615	6TM-S5	
C97	800		RCW-3037	BPD-0008	DD-801	K069	801-001	DC-521	5HK-D1	
C98	.068	600	RCN-086	P688-068		PJ6868				
C99	.01	600	RCN-063	P688-01	D6-103	CUB6S1	GP2-333-103	PT611	6TM-S1	
C100	240	3000	RCW-3101							
C101	.05	600	UCC-045	P388-05	DF-503	CUB6S5		PT615	6TM-S5	
C102	800		RCW-3037	BPD-0008	DD-801	K069	801-001	DC-521	5HK-D1	Note 1
C103	800		RCW-3037	BPD-0008	DD-801	K069	801-001	DC-521	5HK-D1	

Note 1. Used on console models only.

CONTROLS

ITEM No.	RATING RESIST-ANCE	RATING WATTS	General Electric PART No.	IRC PART No.	CLAROSTAT PART No.	CENTRALAB PART No.	MALLORY PART No.	INSTALLATION NOTES
R1A	750Ω		RRC-250	*QJ-594	RTV-488	F3-2	UF13R	Contrast-Panel
B	500KΩ					R2-42	UR55A †	Volume-Rear
C	Switch					KB-1	US26	Attach to R1B
R2A	100KΩ		RRC-252	**QJ-593	RTV-487	F1-31	UE1190	Vert. Hold-Panel
B	150KΩ					R2-32		Brightness-Rear
R3A	2000Ω		RRC-248	Q11-110	A47-2000-S	AB-6	SU6	Vert. Linearity
B	Shaft		Not Req.	Not Req.	KSS-3	AK-1	Not Req.	Attach to R3A
R4A	100KΩ		RRC-247	Q11-128	A47-100K-S	AB-40	SU41	Horiz. Hold
B	Shaft		Not Req.	Not Req.	KSS-3	AK-1	Not Req.	Attach to R4A
R5A	3Meg		RRC-246	Q11-140	A47-3Meg-S	AB-84	SU56	Height
B	Shaft		Not Req.	Not Req.	KSS-3	AK-4	Not Req.	Attach to R5A

† Universal Replacement (Mallory exact duplicate part no. UE6S).
* CONCENTRIKIT EQUIVALENT KIT K-2 BASE ELEMENTS & SHAFTS B17-105 & P1-121 (PANEL)
B13-133 & R2-216 (REAR)
SWITCH 76-1

** CONCENTRIKIT EQUIVALENT KIT K-2 BASE ELEMENTS & SHAFTS B11-128 & P1-114 (PANEL)
B11-129 & R2-209 (REAR)

RESISTORS

ITEM No.	RATING OHMS	RATING WATT	General Electric PART No.	IRC PART No.	NOTES
R6	47KΩ		URD-089	BTS-47K	
R7	22KΩ		URD-081	BTS-22K	
R8	100Ω		URD-025	BTS-100	
R9	820KΩ		URD-119	BTS-820K	
R10	470KΩ		URD-113	BTS-470K	
R11	470Ω		URD-041	BTS-470	
R12	390Ω		URD-039	BTS-390	
R13	470Ω			BTS-470	Note 1
R14	1500Ω			BTS-1500	
R15	6800Ω	1		BTA-6800	
R16	47KΩ		URD-089	BTS-47K	
R17	15KΩ		URD-077	BTS-15K	
R18	150KΩ		URD-101	BTS-150K	
R19	4700Ω		URD-065	BTS-4700	
R20	1200Ω			BTS-1200	
R21	18Ω		URD-007	BTS-18	
R22	10KΩ		URD-073	BTS-10K	
R23	56Ω		URD-019	BTS-56	
R24	1000Ω		URD-049	BTS-1000Ω	
R25	3300Ω	1	URE-061	BTA-3300	
R26	2.7Meg		URD-131	BTS-2.7Meg	
R27	1Meg			BTS-1Meg	
R28	22KΩ		URD-081	BTS-22K	
R29	56Ω		URD-019	BTS-56	
R30	1000Ω		URD-049	BTS-1000	

ITEM No.	RATING OHMS	RATING WATT	General Electric PART No.	IRC PART No.	NOTES
R31	3300Ω	1	URE-061	BTA-3300	
R32	3900Ω	2	URY-063	BTH-3900	
R33	330Ω		URD-037	BTS-330	
R34	470KΩ		URD-113	BTS-470K	
R35	180Ω		URD-031	BTS-180	
R36	1000Ω		URD-049	BTS-1000	
R37	6800Ω	1	URE-069	BTA-6800	
R38	47KΩ		URD-089	BTS-47K	
R39	470KΩ		URD-113	BTS-470K	
R40	470KΩ		URD-113	BTS-470K	
R41	3300Ω		URD-061	BTS-3300	
R42	270KΩ		URD-107	BTS-270K	
R43	15Ω		URD-005	BTS-15	
R44	4000Ω	5	RRW-053		
R45	10KΩ			BTS-10K	
R46	270KΩ		URD-107	BTS-270K	
R47	33KΩ		URD-085	BTS-33K	
R48	4700Ω		URD-065	BTS-4700	
R49	2.2Meg		URD-129	BTS-2.2Meg	
R50	1000Ω		URD-049	BTS-1000	
R51	180Ω		URD-031	BTS-180	
R52	470Ω		URD-041	BTS-470	
R53	330Ω		URD-037	BTS-330	
R54	22KΩ			BTS-22K	
R55	10KΩ 5%		URD-1073	BTS-10K 5%	

RESISTORS (cont)

ITEM No.	RATING OHMS	RATING WATT	General Electric PART No.	IRC PART No.	NOTES
R56	10KΩ 5%		URD-1073	BTS-10K 5%	
R57	33KΩ		URD-085	BTS-33K	Note 2
R58	6.8Meg		URD-141	BTS-6.8Meg	
R59	470KΩ		URD-113	BTS-470K	
R60	470KΩ		URD-113	BTS-470K	
R61	510Ω 5%		URD-1042	BTS-510 5%	
R62	1Meg			BTS-1Meg	
R63	33KΩ		URD-085	BTS-33K	
R64	220KΩ		URD-105	BTS-220K	
R65	820KΩ		URD-119	BTS-820K	
R66	10Meg		URD-145	BTS-10Meg	
R67	300KΩ			BTS-300K	
R68	1Meg		URD-121	BTS-1Meg	
R69	6200Ω 5%		URD-1044	BTS-6200 5%	
R70	16KΩ	2	URF-1073	BTB-16K	
R71	12KΩ	2	URF-075	BTB-12K	
R72	15KΩ		URD-077	BTS-15K	
R73	2.2Meg		URD-129	BTS-2.2Meg	
R74	10KΩ		URD-073	BTS-10K	
R75	18KΩ		URD-079	BTS-18K	
R76	47KΩ		URD-089	BTS-47K	
R77	33KΩ		URD-085	BTS-33K	
R78	82KΩ		URD-095	BTS-82K	
R79	100KΩ		URD-097	BTS-100K	Note 3
R80	5.6Meg		URD-139	BTS-5.6Meg	
R81	220KΩ		URD-185	BTS-220K	
R82	2.2Meg		URD-129	BTS-2.2Meg	
R83	4700Ω		URD-065	BTS-4700	
R84	1000Ω		URD-049	BTS-1000	

ITEM No.	RATING OHMS	RATING WATT	General Electric PART No.	IRC PART No.	NOTES
R85	1Meg		URD-121	BTS-1Meg	
R86	1Meg		URD-121	BTS-1Meg	
R87	2200Ω		URD-057	BTS-2200	
R88	2200Ω		URD-057	BTS-2200	
R89	3600Ω		URD-1062	BTS-3600	
R90	910KΩ		URD-1120	BTS-910K	
R91	910KΩ		URD-1120	BTS-910K	
R92	150KΩ		URD-101	BTS-150K	
R93	470KΩ		URD-113	BTS-470K	
R94	120KΩ		URD-099	BTS-150K	
R95	1000Ω		URD-049	BTS-1000	
R96	12KΩ		URD-075	BTS-12K	
R97	39KΩ		URD-087	BTS-39K	
R98	82KΩ		URD-095	BTS-82K	
R99	12KΩ		URD-075	BTS-12K	
R100	1Meg		URD-121	BTS-1Meg	
R101	330Ω		URD-037	BTS-330	
R102	15KΩ 5%	2	URF-1077	BTB-15K 5%	
R103	470KΩ	1	URE-113	BTA-470K	
R104	470KΩ	1	URE-113	BTA-470K	
R105	1.2Meg		URD-123	BTS-1.2Meg	
R106	3.3Ω		RRW-105		
R107	2200Ω		URD-057	BTS-2200	
R108	6800Ω	2	URF-068	BTB-6800	
R109	4700Ω	2	URF-065	BTB-4700	
R110	330Ω		URD-037	BTS-330	
R111	24KΩ	2		BTB-24K	Note 2
R112	3300Ω	1	URE-061	BTA-3300	
R113	1000Ω	1	URE-049	BTA-1000	
R114	100KΩ	2	URF-001	BTB-100K	

Note 1: Some models may use a 4700Ω in this application.
Note 2: Not used in all versions.
Note 3: Some models may use a 82KΩ in this application.

TRANSFORMER (POWER)

ITEM No.	RATING PRI.	RATING SEC. 1	RATING SEC. 2	General Electric PART No.	Stancor PART No.	Merit PART No.	Triad PART No.	RCA TYPE No.	Halldorson PART No.	Thordarson PART No.
T1	117VAC @ 1.5A	556VCT .220A	5VAC @ 3A	RTP-3181					P9733	
	SEC. 3	SEC. 4	SEC. 5							
	6.3VAC @ 8A									

TRANSFORMERS (SWEEP CIRCUITS)

ITEM No.	USE	General Electric PART No.	Halldorson PART No.	Merit PART No.	RCA PART No.	Rom PART No.	Stancor TYPE No.	Thordarson PART No.	Triad PART No.
T2	Horiz. Output Trans.	RTO-149-1 RTO-149 ①							
T3	Vert. Output Trans.	RTO-154	Z1806	A-3039		V312	A-8141	26S54	A-109X ②
T4A	Yoke-Horiz. (12MH)③	RLD-052 ④							
B	Vert. (40MH)								
T5	Horiz. Lin. Coil (4.5-17MH)	RLD-060	RF800 ⑤⑦	MWC-1 ⑤ ⑥	201R3	201R16	WC-5 ⑤⑥	WC-19 ⑤	WC-12 ⑥
T6A	Width Coils (.17-1.6MH)	RLD-058							
B	(1.1-8.5MH)								

① Alternate horizontal output transformer.
② Connect as auto transformer.
③ Horizontal windings parallel connected.
④ Includes resistors R87 and R88.
⑤ Enlarge mounting hole.
⑥ Connect to coded red and blue terms.
⑦ Connect to terms #1 and #2.

TRANSFORMER (AUDIO OUTPUT)

ITEM No.	IMPEDANCE PRI.	IMPEDANCE SEC.	General Electric PART No.	Stancor PART No.	Merit PART No.	Triad PART No.	Halldorson PART No.	Thordarson PART No.	NOTES
T†	4.8KΩ	3.7Ω	RTO-156	A-3337	A-3019	S-5Z	Z1602	26S49	

SPEAKER

ITEM No.	RATINGS SIZE	RATINGS FIELD	RATINGS V. C. IMP.	General Electric PART No.	JENSEN PART No.	QUAM PART No.	NOTES
SP1	5-1/4"	PM	3.7Ω	S-527-D7	ST-803 Mod. P525-V	52A1	① Used in console models
	8"	PM	3.7Ω	S-825G-7 ①	ST-115 Mod.P8-V	8A21	

COILS (RF-IF)

ITEM No.	USE	DC RES. PRI.	DC RES. SEC.	General Electric PART No.	MEISSNER PART No.	MERIT PART No.	MILLER PART No.	NOTES
L1	UHF Input Coil	0Ω	0Ω	RSX-015				Part of complete wafer assembly.
L2	VHF Ant. Trans	.3Ω	.1Ω	RLA-042				
L3	VHF IF Trap	.3Ω		RLI-248				
L4	VHF Ant. Coil	0Ω		RSX-046				Channel 5 position: part of complete wafer assembly
L5	VHF Ant. Coils	0Ω		RSX-046				
L6	VHF Ant. Coil	0Ω		RSX-046				Channel 13 position; part of complete wafer assembly
L7	VHF Neut. Coil	0Ω		RLI-289				
L8	VHF IF Coil	0Ω		RSX-044				Channel 6 position; part of complete wafer assembly
L9	VHF IF Coils	0Ω		RSX-044				
L10	UHF IF Coil	0Ω		RSX-044				Channel 13 position; part of complete wafer assembly
L11	UHF RF Coil	0Ω		RSX-044				UHF position; part of complete wafer assembly
L12	Hi-Band Coupling	0Ω						
L13	VHF Mixer Grid Coils	0Ω		RSX-043				
L14	VHF Mixer Grid Coil	0Ω		RSX-043				Channel 6 position; part of complete wafer assembly
L15	UHF Mixer Grid Coil	0Ω		RSX-043				Part of complete wafer assembly
L16	VHF Mixer Grid Coil	0Ω		RSX-043				Channel 13 position; part of complete wafer assembly
L17	VHF Osc. Coils	0Ω		RSX-042				
L18	VHF Osc. Coil	0Ω		RSX-042				Channel 6 position; part of complete wafer assembly
L19	VHF Osc. Coil	0Ω		RSX-042				Channel 13 position; part of complete wafer assembly
L20	VHF RF Choke	0Ω						
L21	VHF RF Choke	0Ω		RLI-288				
L22	VHF Conv. Plate	.1Ω		RLI-285				
L23	47.25MC trap	0Ω		RLI-246	17-4502 *			
L24	1st Video IF	.1Ω		RLI-192	17-4506 ■		6219▲	
L25	2nd Video IF	.1Ω	.1Ω	RTL-153	17-4522		6219	
L26	3rd Video IF	.1Ω	.1Ω	RTL-155	17-4524		6219	
L27	4th Video IF	.1Ω	.1Ω	RLI-269			6219	
L28	Series Peaking Coil	8.2Ω		RLI-138	19-1005		4612	10 Microhenries, IRC part no. CL-1.
L29	Series Peaking coil	2.1Ω		RLF-024	19-3036	TV-180	6176	31 Microhenries
L30	Shunt Peaking Coil	8.5Ω		RLI-194	19-3300		6155	330 Microhenries
L31	Series Peaking Coil	3.3Ω		RLI-241	19-7068		6172	68 Microhenries
L32	4.5MC trap	1.1Ω		RLI-244	20-1004	TV-151	1469	
L33	Series Peaking Coil	6.5Ω		RLI-245	19-3160♦	TV-184♦	4644♦	150 Microhenries, wound on 12KΩ resistor
L34	Shunt Peaking Coil	6Ω		RLI-220	19-3180	TV-184	6180	180 Microhenries
L35	Shunt Peaking Coil	8.5Ω		RLI-270	19-3300		6155	330 Microhenries
L36	Sound IF	2.2Ω		RLI-243	20-1004	TV-151	1469	
L37	Ratio Det.	3.4Ω	.6Ω	RTD-015	17-3493 †	TV-110 †	1468 †	Includes 220Ω resistor
L38	Ringing coil	63Ω		RLI-247	19-1576 ▲	TV-163 ▲	6210▲	
L39	RF Choke	8.2Ω		RLI-138	19-1005		4612	10 Microhenries, IRC part no. CL-1.

* Use trap winding only.
■ Detune trap winding.
▲ Use one winding only.
♦ Parallel with 12KΩ resistor.
† Drill mounting holes and add 220Ω resistor externally.
▲ Enlarge mounting hole.

FILTER CHOKE

ITEM No.	RATINGS TOTAL DIRECT CURRENT	RATINGS D.C. RESISTANCE	RATINGS INDUCTANCE @ CURRENT 1000 ~(.)	General Electric PART No.	Stancor PART No.	Merit PART No.	Triad PART No.	Halldorson PART No.	Thordarson PART No.
L40	.220A	54Ω	1HY	RLF-068	C-2327	C-2996 ①	C-23X ①	C-5040	26C44 ①

① Drill one new mounting hole.

CRYSTAL DIODES

ITEM No.	ORIG. TYPE	General Electric PART No.	FEDERAL PART No.	SYLVANIA PART No.	NOTES
M1	1N86G			1N60	Video Det.
M2	1N86G			1N60	AGC Rectifier