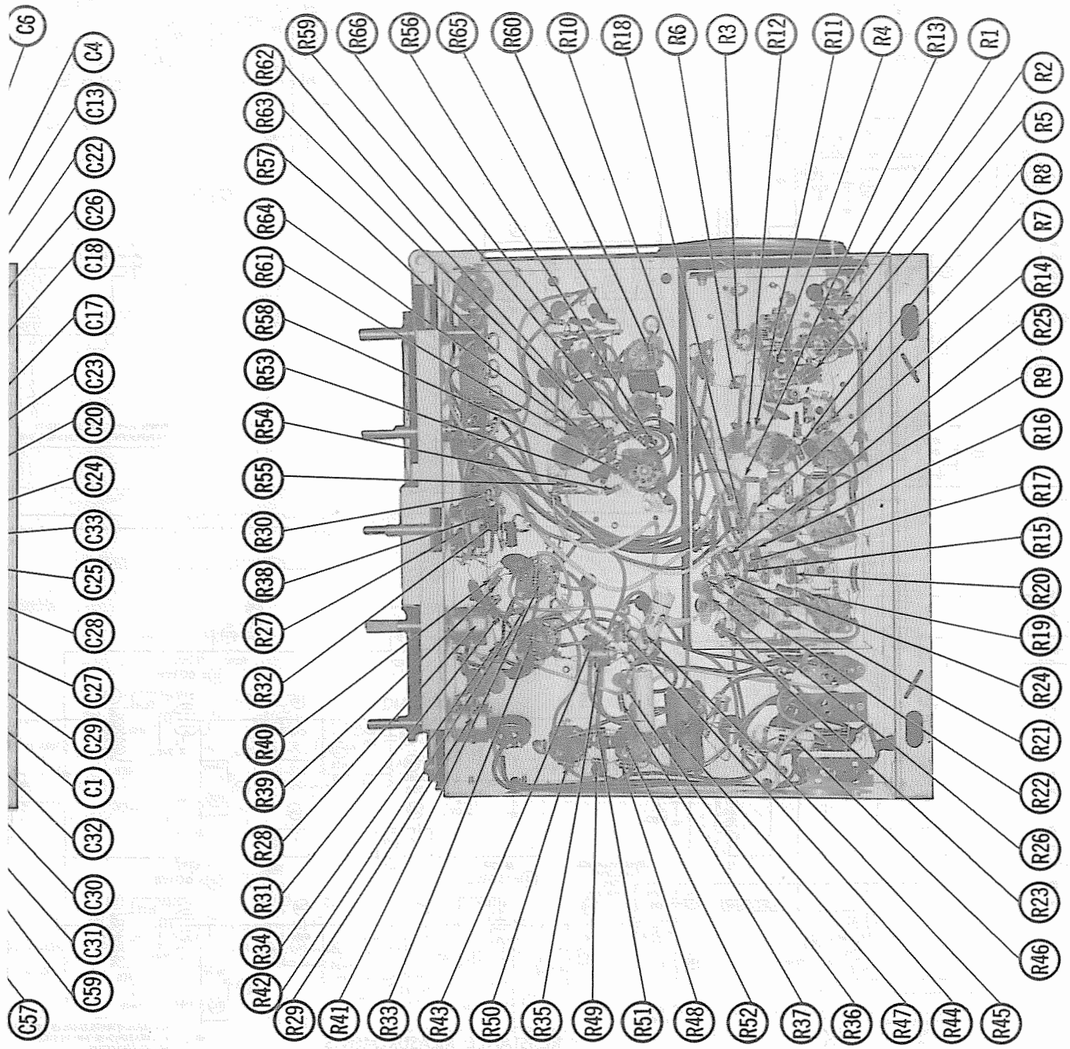

PHOTOFACT® Folder

ELECTROHOME MODELS BEDFORD, BEDFORD M, CORSAIR, CORSAIR M, ROMANO, ROMANO M, TAMPICO, TAMPICO M

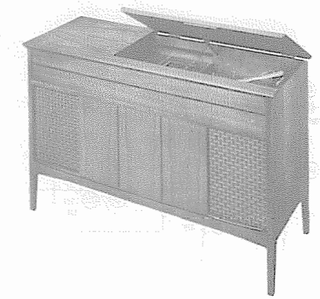

TRADE NAME	Models Avanti/M, Bedford/M, Corsair/M, Kismet/M, Romano/M, Tampico/M
SUPPLIER	For Current Address, see Master Index
TYPE SET	6-Tube AM-FM Tuner, 2-Tube Amplifier, 2-Tube FM Stereo, 4-Speed Automatic Record Changer
POWER SUPPLY	105 — 120 Volts AC, 60 Cycles RATING 65 Watts, .67 Amp. @ 117 Volts AC
TUNING RANGE — BROADCAST	535 — 1650KC FREQ. MOD. 87.5 — 109MC

FOR SERVICE INFORMATION ON RECORD CHANGER—SEE SIMILAR CHANGER—PHOTOFACT SET 638, FOLDER 7.

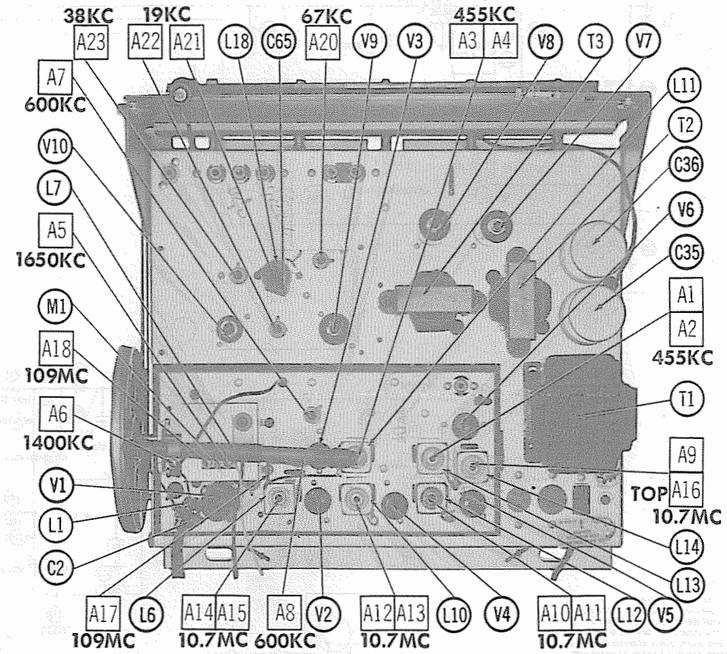

ELECTROHOME MODELS BEDFORD, BEDFORD M, CORSAIR, CORSAIR M, ROMANO, ROMANO M, TAMPICO, TAMPICO M

SET 767 FOLDER 6

HOWARD W. SAMS & CO., INC. Indianapolis 6, Indiana

The listing of any available replacement part herein does not constitute in any case a recommendation, warranty or guaranty by Howard W. Sams & Co., Inc., as to the quality and suitability of such replacement part. The numbers of these parts have been compiled from information furnished to Howard W. Sams & Co., Inc., by the manufacturers of the particular type of replacement part listed. NN372

Reproduction or use, without express permission, of editorial or pictorial content, in any manner, is prohibited. No patent liability is assumed with respect to the use of the information contained herein. © 1965 Howard W. Sams & Co., Inc., Indianapolis 6, Indiana. Printed in U. S. of America

DATE 8-65 SET 767 FOLDER 6

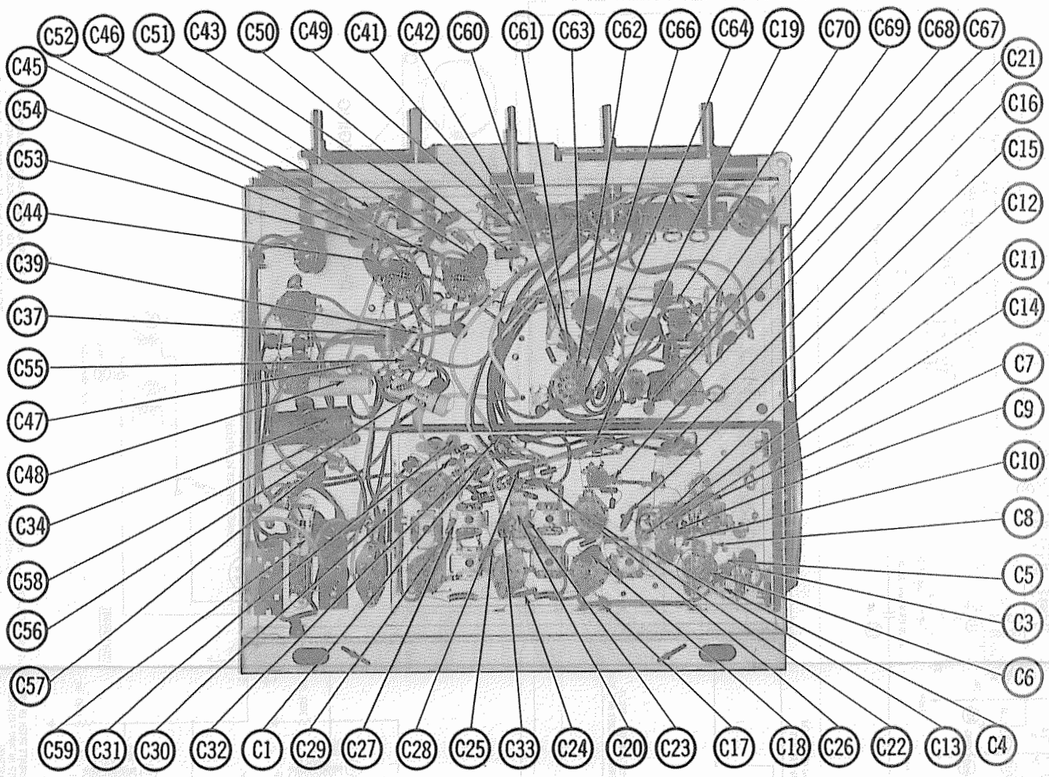
C52 C46 C51 C43 C50 C49 C41 C42 C60 C61 C63 C62 C66 C64 C19 C70 C69 C68 C67
C45
C54
C53
C44
C39
C37
C55
C47
C48
C34
C58
C56
C57
C21
C16
C15
C12
C11
C14
C7
C9
C10
C8
C5
C3
C6
C59 C31 C30 C32 C1 C29 C27 C28 C25 C33 C24 C20 C23 C17 C18 C26 C22 C13 C4

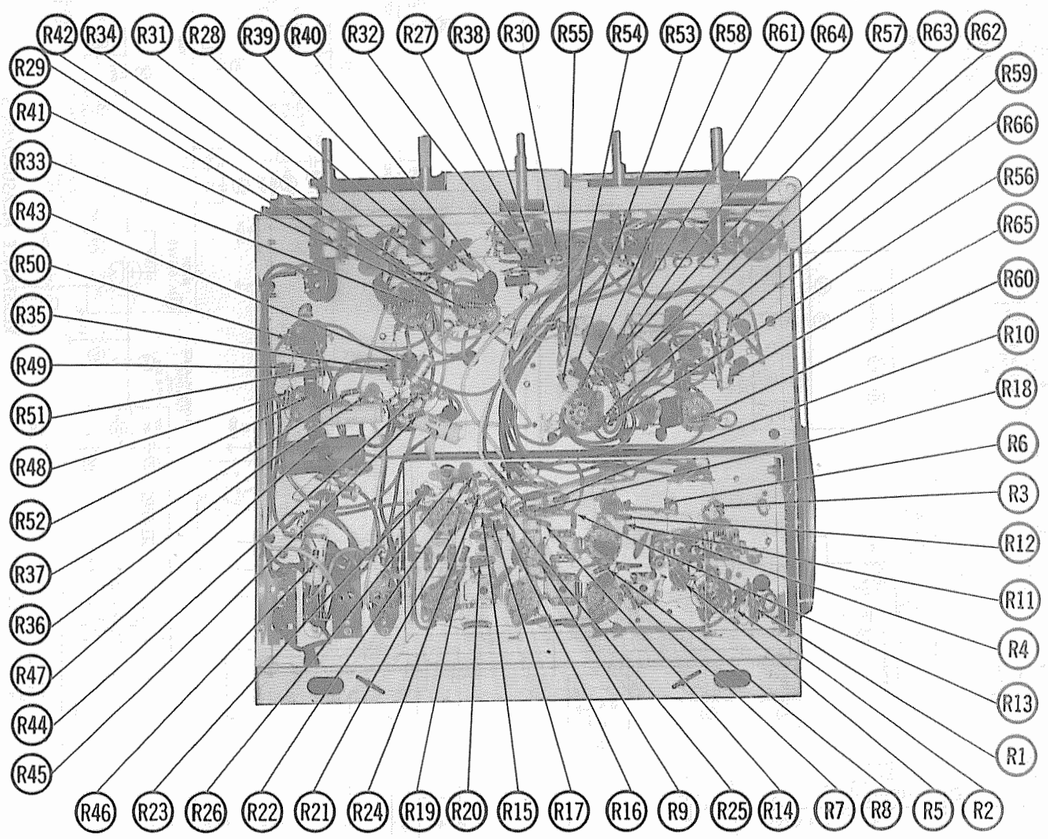
R42 R34 R31 R28 R39 R40 R32 R27 R38 R30 R55 R54 R53 R58 R61 R64 R57 R63 R62
R29
R41
R33
R43
R50
R35
R49
R51
R48
R52
R37
R36
R47
R44
R45
R59
R66
R56
R65
R60
R10
R18
R6
R3
R12
R11
R4
R13
R1
R46 R23 R26 R22 R21 R24 R19 R20 R15 R17 R16 R9 R25 R14 R7 R8 R5 R2

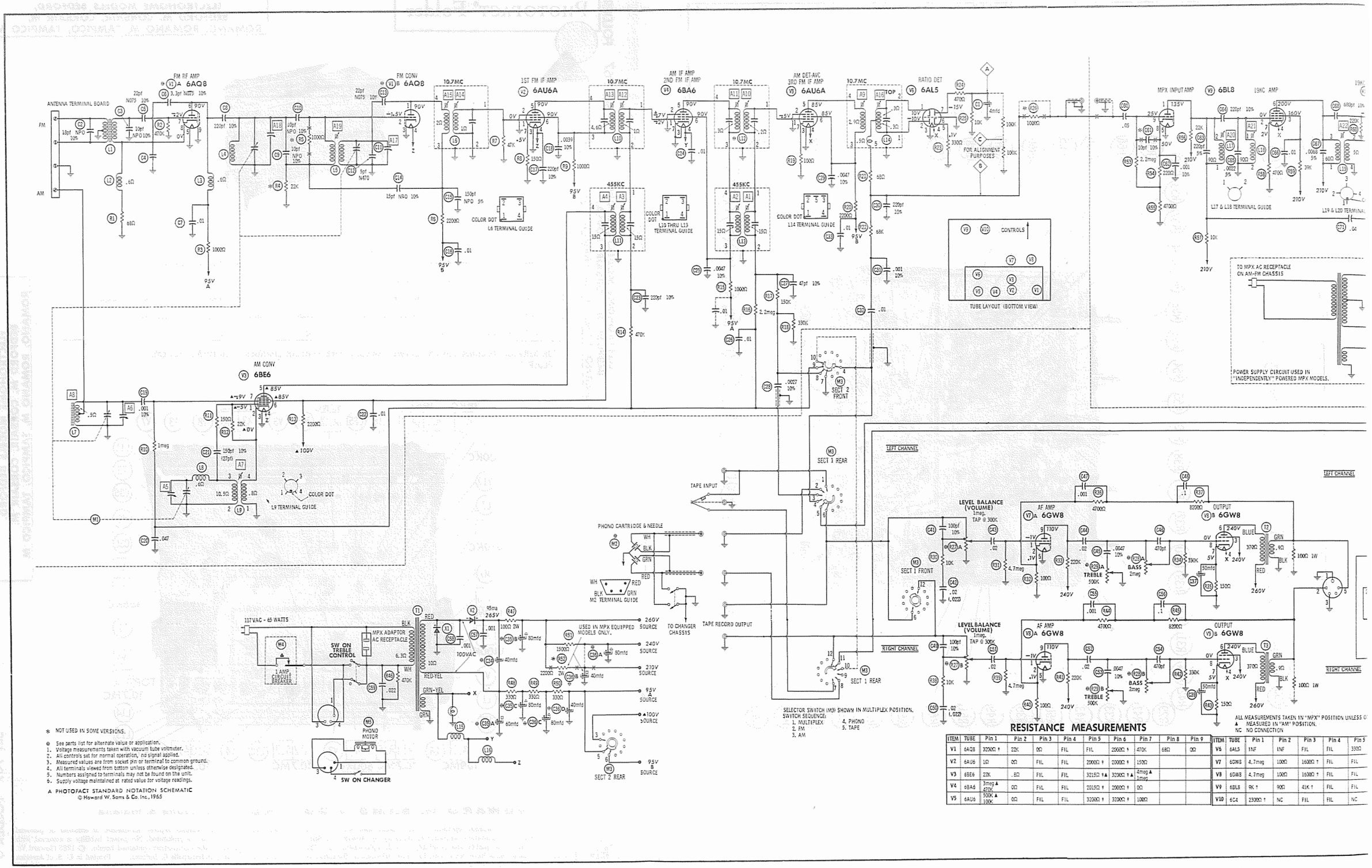

* NOT USED IN SOME VERSIONS.

⊕ See parts list for alternate value or application.
1. Voltage measurements taken with vacuum tube voltmeter.
2. All controls set for normal operation, no signal applied.
3. Measured values are from socket pin or terminal to common ground.
4. All terminals viewed from bottom unless otherwise designated.
5. Numbers assigned to terminals may not be found on the unit.
6. Supply voltage maintained at rated value for voltage readings.

A PHOTOFACT STANDARD NOTATION SCHEMATIC

© Howard W. Sams & Co. Inc., 1965

RESISTANCE MEASUREMENTS

ALL MEASUREMENTS TAKEN IN "MPX" POSITION UNLESS O
▲ MEASURED IN "AM" POSITION.
NC NO CONNECTION

ITEM	TUBE	Pin 1	Pin 2	Pin 3	Pin 4	Pin 5	Pin 6	Pin 7	Pin 8	Pin 9
V1	6AQ8	320KΩ ↑	22K	0Ω	FIL	FIL	200KΩ ↑	470K	68Ω	0Ω
V2	6AU6	1Ω	0Ω	FIL	FIL	200KΩ ↑	200KΩ ↑	150Ω		
V3	6BE6	22K	.8Ω	FIL	FIL	3215Ω ↑▲	320KΩ ↑▲	4meg ▲ 1meg		
V4	6BA6	3meg ▲ 470K	0Ω	FIL	FIL	2015Ω ↑	200KΩ ↑	0Ω		
V5	6AU6	500K ▲ 100K	0Ω	FIL	FIL	320KΩ ↑	320KΩ ↑	100Ω		

ITEM	TUBE	Pin 1	Pin 2	Pin 3	Pin 4	Pin 5
V6	6AL5	1NF	1NF	FIL	FIL	330Ω
V7	6GW8	4.7meg	100Ω	1600Ω ↑	FIL	FIL
V8	6GW8	4.7meg	100Ω	1600Ω ↑	FIL	FIL
V9	6BL8	9K ↑	90Ω	41K ↑	FIL	FIL
V10	6C4	2300Ω ↑	NC	FIL	FIL	NC

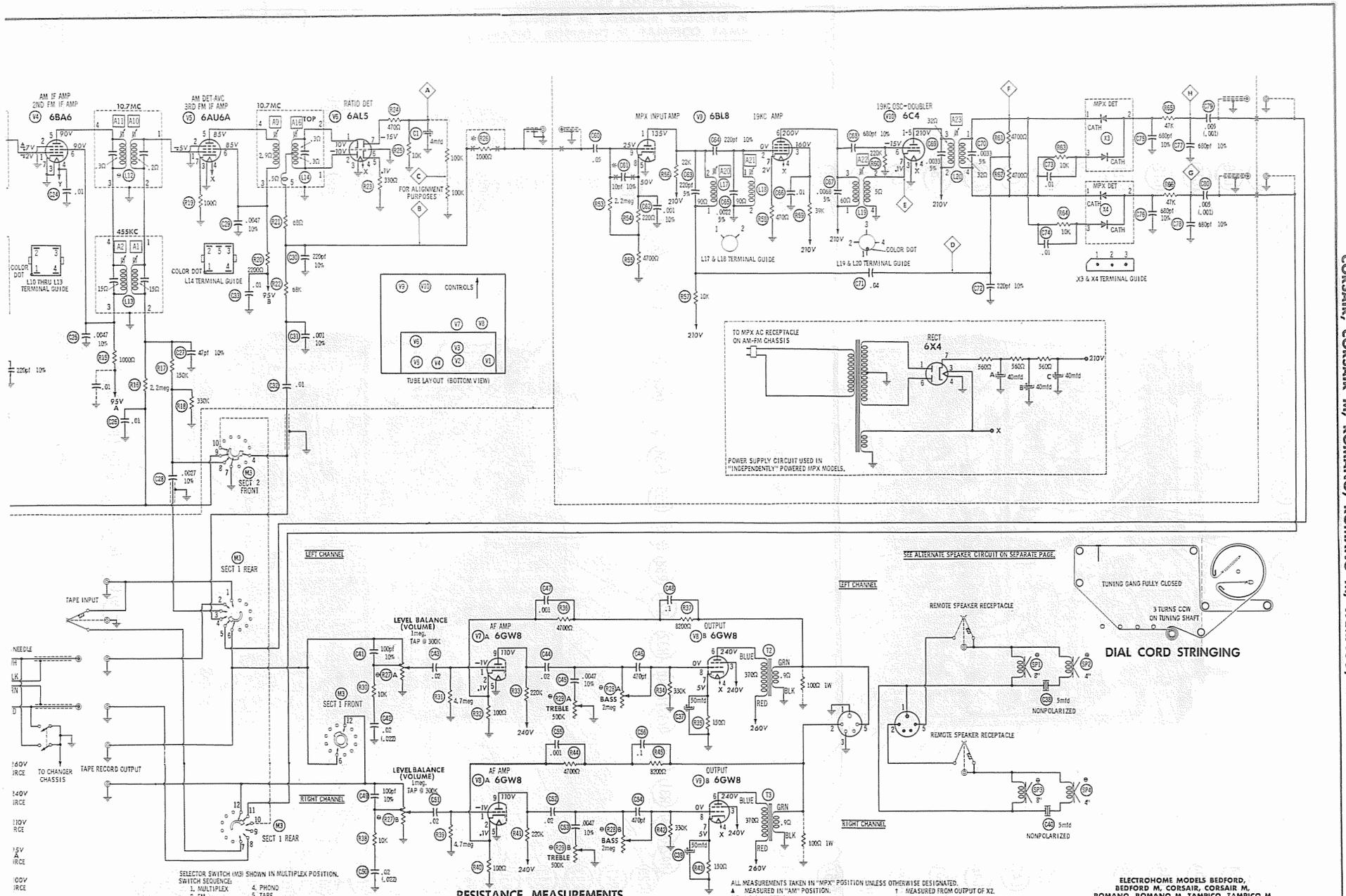

RESISTANCE MEASUREMENTS

ITEM	TUBE	Pin 1	Pin 2	Pin 3	Pin 4	Pin 5	Pin 6	Pin 7	Pin 8	Pin 9
V1	6AQ8	3200Ω †	22K	0Ω	FIL	FIL	2000Ω †	470K	68Ω	0Ω
V2	6AU6	1Ω	0Ω	FIL	FIL	2000Ω †	2000Ω †	150Ω		
V3	6BE6	22K	.8Ω	FIL	FIL	3215Ω †▲	3200Ω †▲	4meg ▲ 1meg		
V4	6BA6	3meg ▲ 470K	0Ω	FIL	FIL	2015Ω †	2000Ω †	0Ω		
V5	6AU6	500K ▲ 100K	0Ω	FIL	FIL	3200Ω †	3200Ω †	100Ω		

ITEM	TUBE	Pin 1	Pin 2	Pin 3	Pin 4	Pin 5	Pin 6	Pin 7	Pin 8	Pin 9
V6	6AL5	INF	INF	FIL	FIL	330Ω	0Ω	10.5K		
V7	6GW8	4.7meg	100Ω	1600Ω †	FIL	FIL	370Ω †	150Ω	330K	221K †
V8	6GW8	4.7meg	100Ω	1600Ω †	FIL	FIL	370Ω †	150Ω	330K	221K †
V9	6BL8	9K †	90Ω	41K †	FIL	FIL	2360Ω †	470Ω	4920Ω	2.2meg
V10	6C4	23000Ω †	NC	FIL	FIL	NC	220K	5Ω		

ALL MEASUREMENTS TAKEN IN "MPX" POSITION UNLESS OTHERWISE DESIGNATED.
▲ MEASURED IN "AM" POSITION.
NC NO CONNECTION
† MEASURED FROM OUTPUT OF X2.
‡ MEASURED FROM JUNCTION OF R48 & C34.

ELECTROHOME MODELS BEDFORD, BEDFORD M, CORSAIR, CORSAIR M, ROMANO, ROMANO M, TAMPICO, TAMPICO M

ELECTROHOME MODELS BEDFORD, BEDFORD M, CORSAIR, CORSAIR M, ROMANO, ROMANO M, TAMPICO, TAMPICO M

ALIGNMENT INSTRUCTIONS

Maintain line voltage at 117 volts. Use only enough generator output to obtain a suitable indication.
Allow a 15 minute warmup for receiver and equipment.
CAUTION: Use isolation transformer, if available. If not, observe polarity when connecting test equipment.
Suggested Alignment Tools:
A1 thru A4, A7, A9 thru A16, A19 thru A23...GENERAL CEMENT #8606, 8606L, 8869... WALSCO #2543, 2544, 2568
A5, A6, A17, A18.....GENERAL CEMENT #8868, 8987, 9089.....WALSCO #2531-X, 2541, 2587

AM ALIGNMENT — SELECTOR IN AM POSITION

Fashion loop of several turns of wire and connect generator across loop. Set volume control at maximum.

	GENERATOR FREQUENCY	DIAL SETTING	INDICATOR	ADJUST	REMARKS
1.	455KC (400~ Mod.)	Tuning gang fully open.	Output Meter across Voice coil.	A1, A2, A3, A4	Adjust for maximum. Repeat until no further improvement can be made.
2.	1650KC	"	"	A5	Adjust for maximum.
3.	1400KC	Tune to signal.	"	A6	"
4.	600KC	"	"	A7, A8	Adjust A8 by sliding Coil along ferrite core Rock tuning gang and adjust for maximum. Repeat steps 2 thru 4 until no further improvement can be made.

FM ALIGNMENT USING AM SIGNAL GENERATOR — SELECTOR IN FM POSITION

High side to ungrounded shield over FM converter tube, low side to ground.

	GENERATOR FREQUENCY	DIAL SETTING	INDICATOR	ADJUST	REMARKS
5.	10.7MC (Unmod.)	Point of non-interference.	DC probe of VTVM to point (A); common to ground.	A9, A10 A11, A12, A13, A14, A15	Adjust for maximum.
6.	"	"	DC probe to point (B); common to point (C).	A16	Adjust for zero reading. A positive or negative reading will be obtained on either side of the correct setting.

FM IF ALIGNMENT USING FM SIGNAL GENERATOR — SELECTOR IN FM POSITION

High side to ungrounded shield over FM converter, low side to ground. Use only enough marker signal to obtain indication. Use 60~ frequency modulated signal with 450KC sweep. Use 120~ sawtooth voltage in scope for horizontal deflection.

	GENERATOR FREQUENCY	DIAL SETTING	INDICATOR	ADJUST	REMARKS
5.	10.7MC (450KC Swp.)	Point of non-interference	Vert. amp. of Scope to point (A); low side to ground.	A9, A10, A11, A12, A13, A14, A15	Disconnect stabilizing capacitor C1. Adjust for maximum gain and symmetry of response similar to Fig. 1 with marker as shown. Reconnect C1.
6.	"	"	Vert. amp. to point (B); low side to poing (C).	A16	Adjust A 16(Secondary) to place marker at center of crossover lines similar to Fig. 2. Adjust A 9 (Primary) for maximum amplitude and straightness of crossover lines.

FM RF ALIGNMENT

Connect generator across antenna terminals with 120Ω carbon resistors in series with each lead.

	GENERATOR FREQUENCY	DIAL SETTING	INDICATOR	ADJUST	REMARKS
7.	109MC	Set at high end.	DC probe of VTVM to point (A); common to ground.	A17, A18	Adjust for maximum.
8.	90MC	Tune to signal.	"	A19	Rock tuning and adjust for maximum. Repeat steps 7 and 8 until no further improvement can be made.

FM STEREO MULTIPLEX ALIGNMENT USING FM STEREO SIGNAL GENERATOR (± .0001%) ACCURACY)

Connect high side of generator to point (B), low side to ground.

	GENERATOR FREQUENCY	INDICATOR	ADJUST	REMARKS
9.	67KC	Vert. amp. of Scope thru a 1 meg to point (D); low side to ground.	A20	Adjust for MINIMUM.
10.	19KC	Vert. amp. thru 47K to point (E); low side to ground.	A21, A22	Adjust for maximum.
11.	"	Vert. amp. thru 47K to point (F); low side to ground.	A23	Adjust maximum for 38KC response.
12.	Modulated Left Channel	Vert. amp. to point (G); low side to ground.	A21, A22, A23	Adjust for MINIMUM. This should require only a slight adjustment.
13.	Modulated Right Channel	Vert. amp. to point (H); low side to ground.		Check for MINIMUM. Make compromise adjustment if necessary, of A21, A22, A23.
	To align multiplex section using an air signal, first make sure FM section is properly aligned. Tune in a strong FM stereo signal. Follow steps 9 thru 13 above except in step 9 adjust to eliminate whistle or interference.			

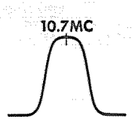

FIG. 1

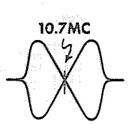

FIG. 2

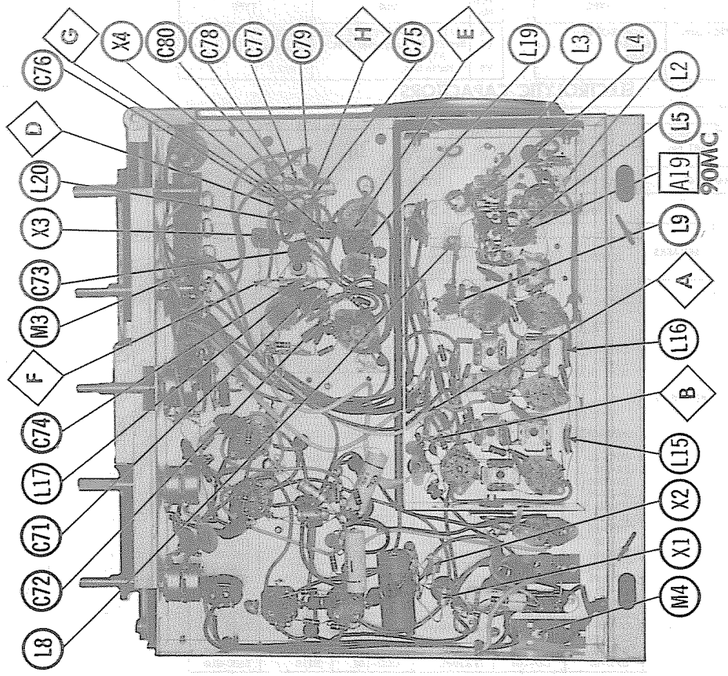

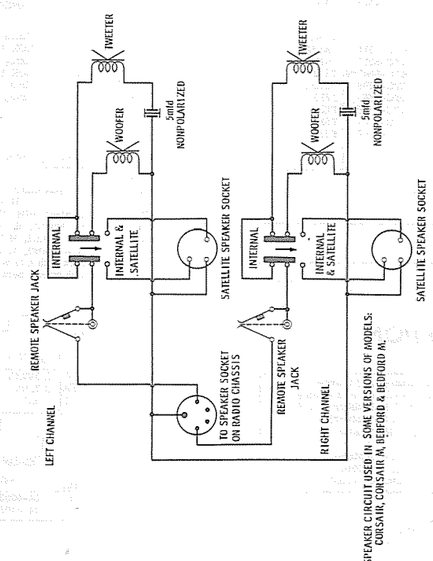

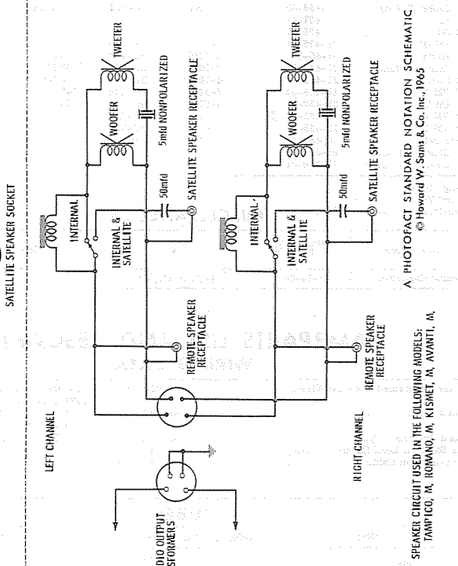

A PHOTOFACT STANDARD NOTATION SCHEMATIC
© Howard W. Sams & Co. Inc., 1965

ELECTROHOME MODELS BEDFORD, BEDFORD M, CORSAIR, CORSAIR M, ROMANO, ROMANO M, TAMPICO, TAMPICO M

FOLDER 6

TUNER PARTS LIST AND DESCRIPTION

TUBES

ITEM No.	USE (AMPEREX • GENERAL ELECTRIC)	TYPE	ITEM No.	USE (RCA • SYLVANIA)	TYPE
V1	FM RF Amp.-FM Conv.	6AQ8/ECC95	V4	AM IF Amp.-2nd FM IF Amp.	6BA6
V2	1st FM IF Amp.	6AU6A	V5	3rd FM IF Amp.-AM Det.-AVC	6AU6A
V3	AM Conv.	6BE6	V6	Ratio Det.	6AL5

ELECTROLYTIC CAPACITORS

ITEM No.	RATING CAP.	RATING VOLT.	Electrohome PART No.	AEROVOX PART No.	CORNELL-DUBILIER PART No.	GENERAL ELECTRIC PART No.	MALLORY PART No.	SPRAGUE PART No.
C1	4	64	44-88-01	CRE803A	NLW4-150	MT1-4	TT80X4	TE-1403

FIXED CAPACITORS

ITEM No.	RATING	REMARKS	AEROVOX PART No.	CENTRALAB PART No.	CORNELL-DUBILIER PART No.	ELMENCO PART No.	MALLORY PART No.	SPRAGUE PART No.
C2	18 NPO 10%		NPO-DI 20	TCZ-18	C10Q2C	CCTO-180	CNO418	10TCC-Q18
C3	10 NPO 10%		NPO-DI 10	DTZ-10	C10Q1C	CCTO-100	CNO410	10TCC-Q10
C4	22 N075 10%							
C5	220 10%		DI-220	DD-221	LA10T22-S3	CCD-221	GP322	10TS-T22
C6	3.3pf N075 10%							
C7	.01		BPD-01	DD-103	BYA10S1	CCD-103	B110	5HK-S10
C8	220 10%		DI-220	DD-221	LA10T22-S3	CCD-221	GP322	10TS-T22
C9	10 NPO 10%		NPO-DI 10	DTZ-10	C10Q1C	CCTO-100	CNO410	10TCC-Q10
C10	10 NPO 10%		NPO-DI 10	DTZ-10	C10Q1C	CCTO-100	CNO410	10TCC-Q10
C11		#45-36-01						
C12	5pf N470					*		10TCT-V50
C13	22 N075 10%							
C14	15 NPO 10%		NPO-DI 15	DTZ-15	C10Q15C	CCTO-150	CNO415	10TCC-Q15
C15	150 5%			DTZ-150	C10T15C		CNO315	10TCC-T15
C16	.01		BPD-01	DD-103	BYA10S1	CCD-103	B110	5HK-S10
C17	220 10%		DI-220	DD-221	LA10T22-S3	CCD-221	GP322	10TS-T22
C18	.0039 10%		DI-3900	CF-392	JB6D39	CCD-392	JF239	10TS-D39
C19	.001 10%		DI-1000	DD-102	JB6D1	CCD-102	GP210	10TS-D10
C20	.047 200V		P288N-047	DD-503	PM2S47	4DP-3-473	GEM2147	2TM-S47
C21	150 10%		DI-150	DD-151	LA10T15-S3	CCD-151	GP315	10TS-T15
C22	.01		BPD-01	DD-103	BYA10S1	CCD-103	B110	5HK-S10
C23	220 10%		DI-220	DD-221	LA10T22-S3	CCD-221	GP322	10TS-T22
C24	.01		BPD-01	DD-103	BYA10S1	CCD-103	B110	5HK-S10
C25	.0047 10%		DI-4700	CF-472	JB6D47	CCD-472	JF247	10TS-D47
C26	.01		BPD-01	DD-103	BYA10S1	CCD-103	B110	5HK-S10
C27	47 10%		DI-47	DD-470	LA10Q47-S3	CCD-470	GP447	10TS-Q47
C28	.0027 10%		DI-2700	CPR-2700		CCD-272		
C29	.0047 10%		DI-4700	CF-472	JB6D47	CCD-472	JF247	10TS-D47
C30	220 10%		DI-220	DD-221	LA10T22-S3	CCD-221	GP322	10TS-T22
C31	.001 10%		DI-1000	DD-102	JB6D1	CCD-102	GP210	10TS-D10
C32	.01		BPD-01	DD-103	BYA10S1	CCD-103	B110	5HK-S10
C33	.01		BPD-01	DD-103	YA10S1	CCD-103	B110	5HK-S10

* Not normally in distributor's stock. Available thru distributor on order to manufacturer.
# Electrohome Part Number.

COILS (RF-IF)

ITEM No.	USE	Electrohome PART No.	MEISSNER PART No.	MERIT PART No.	MILLER PART No.	STANCOR PART No.	WORKMAN PART No.
L1	FM Ant.	21-411-01					
L2	RF Choke (2.2uh)	21-439-02	19-1002	BC-563	74F226AP	RTC-8517	T813
L3	RF Choke (2.2uh)	21-439-02	19-1002	BC-563	74F226AP	RTC-8517	T813
L4	FM RF	21-487-01					
L5	FM Osc.	21-486-01					
L6	1st FM IF	21-433-04	16-3487	FM-254	1457	RTC-8599	TE686
L7	Loopstick	51-40-01	14-7002	BC-419	2002	RTC-8915	TA552
L8	RF Choke (2.2uh)	21-439-02	19-1002	BC-563	74F226AP	RTC-8517	T813
L9	AM Osc.	21-421-01	14-1077*	BC-387*#	70-OSC*#	RTC-8647*#	T502*#
L10	2nd FM IF	21-433-02	16-3487	FM-254	1457	RTC-8599	TE686
L11	1st AM IF	21-432-02	16-6758	BC-352	14-C1	RTC-8683	T612
L12	3rd FM IF	21-433-06 ①	16-3487	FM-254	1457	RTC-8599	T633
L13	2nd AM IF	21-432-02	16-6758	BC-353	14-C2	RTC-8684	T613
L14	Ratio Det.	21-465-01	17-3498	FM-255	1459	RTC-8600	T635
L15	Fil. Choke (20 turns)	21-300-01					
L16	Fil. Choke (20 turns)	21-300-01					

* Drill Mtg. Hole
# Disregard Tap.
① Some Models may use Part #21-433-03.

MISCELLANEOUS

ITEM No.	PART NAME	Electrohome PART No.	NOTES
M1	Tuning Capacitor	45-52-06	4-Gang AM/FM

AMP PARTS LIST AND DESCRIPTION

WIRING DATA

General-use Unshielded Hook-up Wire	Use BELDEN No.	8530 (Solid) Available in 12 Colors 8524 (Stranded) Available in 12 Colors
Power Cord	Use BELDEN No.	17106 (Plastic) or 17126 (Rubber) - 6 Ft. 17109 (Plastic) or 17129 (Rubber) - 9 Ft.
Power Cord (Interlock Type)	Use BELDEN No.	8874 (Rubber) or 8895 (Plastic)
Low-Loss Shielded Lead (Interconnecting)	Use BELDEN No.	8401 or 8421
Phono Pick-up Arm Cable	Use BELDEN No.	8430 (Two Conductor-Unshielded) 8429 (Two Conductor-Shielded) 8419 (Three Conductor-Shielded)

TUBES

ITEM No.	USE (AMPEREX • GENERAL ELECTRIC)	TYPE	ITEM No.	USE (RCA • SYLVANIA)	TYPE
V7	AF Amp.-Output	6GW8	V8	AF Amp.-Output	6GW8

AMP PARTS LIST AND DESCRIPTION (CONTINUED)

POWER RECTIFIERS & SIGNAL DIODES

ITEM No.	MEASURED CURRENT	ORIGINAL Part or Type No.	RECTIFIERS: GENERAL ELECTRIC PART No.	MALLORY PART No.	RCA PART No.	SARKES TARZIAN PART No.	DIODES: GENERAL ELECTRIC PART No.
X1	.095A	28-6-01 ①	GE-504 or 1N1695	1N540 or 1N2070 ②	1N1764 or 1N2863	40H or F-4 ③	
X2	.095A	28-6-01 ①	GE-504 or 1N1695	1N540 or 1N2070 ②	1N1764 or 1N2863	40H or F-4 ③	

① Dual Unit Part #28-15-01. ② A Dual Unit (VB600) may be used for X1 & X2.
③ A Dual Unit (STFD40) may be used for X1 & X2.

ELECTROLYTIC CAPACITORS

ITEM No.	RATING CAP.	RATING VOLT.	Electrohome PART No.	AEROVOX PART No.	CORNELL-DUBILIER PART No.	GENERAL ELECTRIC PART No.	MALLORY PART No.	SPRAGUE PART No.
C34	40	200	44-203-24 ①	PRS1560	BR40-250	QT1-16	TC58	TVA-1511
C35A	▲60	200	44-203-07 ②	AFH3-29-50	CCO236	XC3-45.2	FP331.3A	TVL-3642
B	▲80	300						
C	▲80	150						
C36A	▲80	300	44-204-06 ③	AFH4-05-85	DD0731.2	XC4-84	FP420.4A	TVLS-4635.15*
B	▲40	300			BR30-150		TC48	
C	▲80	150						
D	40	150						
C37	50	25	44-40-04	CRE617A	NLW50-25	MT1-17	TT25X50	TE-1209
C38	5	10NP	44-5-01	PRS7550	BRNP5-400	NPQT-1	TCN105	TVANS-1110*
C39	50	25	44-40-04	CRE617A	NLW50-25	MT1-17	TT25X50	TE-1209
C40	5	10NP	44-5-01	PRS7550	BRNP4-400	NPQT-1	TCN105	TVANS-1110*

① Alternate Part Number 44-140-01. ② Alternate Part Number 44-153-01. ③ Alternate Part Number 44-154-01
* Not normally in distributor's stock. Available thru distributor on order to manufacturer.

FIXED CAPACITORS

ITEM No.	RATING	REMARKS	AEROVOX PART No.	CENTRALAB PART No.	CORNELL-DUBILIER PART No.	ELMENCO PART No.	MALLORY PART No.	SPRAGUE PART No.
C41	100 10%		DI-100	DD-101	LA10T1-S3	CCD-101	GP310	10TS-T10
C42	.02 150V	(.022) †	P288N-02	DD-203	DPMS4S2	4DP-2-203	PVC212	2PS-S20
C43	.02		BPD-02	DD-203	BYA6S2	CCD-203	B120	5HK-S20
C44	.02		BPD-02	DD-203	BYA6S2	CCD-203	B120	5HK-S20
C45	.0047 10%		DI-4700	CF-472	JB6D47	CCD-472	JF247	10TS-D47
C46	470		BPD-00047	DD-471	BYA10T47	CCD-471	B347	10TS-T47
C47	.001		BPD-001	DD-102	BYA10D1	CCD-102	B210	5HK-D20
C48	.1 200V		P288N-1	DF-104	PKM2P1	2DP-3-104	GEM201	2TM-P10
C49	100 10%		DI-100	DD-101	LA10T1-S3	CCD-101	GP310	10TS-T10
C50	.02 150V	(.022) †	P288N-02	DD-203	DPMS4S2	4DP-2-203	PVC212	2PS-S20
C51	.02		BPD-02	DD-203	BYA6S2	CCD-203	B120	5HK-S20
C52	.02		BPD-02	DD-203	BYA6S2	CCD-203	B120	5HK-S20
C53	.0047 10%		DI-4700	CF-472	JB6D47	CCD-472	JF247	10TS-D47
C54	470		BPD-00047	DD-471	BYA10T47	CCD-471	B347	10TS-T47
C55	.001 10%		DI-1000	DD-102	JB6D1	CCD-102	GP210	10TS-D10
C56	.1 200V		P288N-1	DF-104	PKM2P1	2DP-3-104	GEM201	2TM-P10
C57	.001		BPD-001	DD-102	BYA10D1	CCD-102	B210	5HK-D10
C58	.001		BPD-001	DD-102	BYA10D1	CCD-102	B210	5HK-D10
C59	.022 600V		P688N-022		PM6S22	6DP-2-223	PVC6122	8PS-S22

† Alternate Value.

CONTROLS

All wattages 1/2 watt, or less, unless otherwise listed.

ITEM No.	USE	RESISTANCE	Electrohome PART No.	CENTRALAB PART No.	CLAROSTAT PART No.	CTS-IRC PART No.	MALLORY PART No.
R27A	Level Balance (Volume), Left	1meg 300K Tap	41-222-04 ②			† QJ-1906R	
B	Level Balance (Volume), Right	1meg 300K Tap					
R28A	Bass, Left	2meg	41-218-30 ②	F3-2meg, R3-2meg, SF200, CPL-2		B17-139, B17-139, SK1, QCM or (BU1, CF55, CR45, SS1, SS7A, DC1)*	FA26R, RU26R, CS3500
B	Bass, Right	2meg					
R29A	Treble, Left	500K	41-218-31 ③				
B	Treble, Right, Switch	500K					

* "SNAPTROL"
† "CONCENTRIKIT" Equivalent: K-15 Kit with Base Elements and Shafts:
B13-137X, P17-112 ④ (Panel) B13-137X, R16-127 (Rear)
"SNAPTROL" Equivalent: BU4, CF44T, CR32T, SF10 ④, SR47, DC1
① Models Kismet, M, Avanti, M, Tampico, M & Romano, M Use Part #41-122-09.
② Models Kismet, M & Avanti, M Use Part #41-121-08, Models Tampico, M & Romano, M Use Part #41-218-11.
③ Models Kismet, M & Avanti, M use Part #41-164-03, Models Tampico, M & Romano, M Use Part #41-218-13.
④ Form a small dimple with a hammer and punch on the flat mil portion (rear of slot) of the outer shaft to provide drag (friction clutch effect) between shafts. Assemble control in a normal manner.

TRANSFORMER (POWER)

ITEM No.	RATING PRI.	RATING SEC. 1	RATING SEC. 2	Electrohome PART No.	MERIT PART No.	STANCOR PART No.	THORDARSON PART No.	TRIAD PART No.	NOTES
T1	117VAC @ .67A AC	100VAC @ .130A DC	6.3VAC @ 3.6A AC	24-10087-01					

TRANSFORMER (AUDIO OUTPUT)

ITEM No.	IMPEDANCE PRI.	IMPEDANCE SEC.	Electrohome PART No.	MERIT PART No.	STANCOR PART No.	THORDARSON PART No.	TRIAD PART No.	NOTES
T2	4390Ω	6-8Ω	24-80035-05	A-3019	A-8092	26S49	S-5Z	
T3	4390Ω	6-8Ω	24-80035-05	A-3019	A-8092	26S49	S-5Z	

SPEAKER

ITEM No.	TYPE	Electrohome PART No.	QUAM PART No.	NOTES
SP1	8" PM 6-8Ω	19-80010-03	8A21Z8	* Used in Models Romano, Romano M, Tampico, Tampico M, Avanti, Avanti M, Kismet,
SP2	4" PM 6-8Ω	19-40017-12		

AMP PARTS LIST AND DESCRIPTION (CONTINUED)

SPEAKER (cont)

ITEM No.	TYPE	Electrohome PART No.	QUAM PART No.	NOTES
SP3	8" PM 6-8Ω	19-80010-03	8A21Z8	Kismet M
SP4	4" PM 6-8Ω	19-40017-12		
	10" PM 6-8Ω	19-100009-03		
	10" PM 6-8Ω	19-100006-06*	10A31PA	
	4" PM 6-8Ω	19-40015-02*		

PHONO CARTRIDGE & NEEDLES

*NEEDLE LISTINGS SHOWN ARE FOR RESPECTIVE REPLACEMENT CARTRIDGES ONLY.

ITEM No.	PART No. CARTRIDGE	PART No. NEEDLE*	ASTATIC CARTRIDGE	ASTATIC NEEDLE*	ELECTRO-VOICE CARTRIDGE	ELECTRO-VOICE NEEDLE*	SONOTONE CARTRIDGE	SONOTONE NEEDLE*	NOTES
M2	16-250023-02 ①	16-120028-09	133SD	N50SD* N50SD③	132D	2619DS* 2120DS③	21TSD	N-21TSD*	①Models Corsair/M, Bedford/M, Avanti/M. ③Needle Replacement for Cartridge #16-250023-02, 16-250026-02. Needle Replacement for Cartridge #16-250017-10.
	16-250026-02	16-120028-09	235SD	N50SD* N50SD③	150DF	2620DS* 2120DS③	21TSD	N-21TSD*	
	16-250017-10	16-120028-02	86TSBD	N8-3D* N7-7D* N8-3S N7-7D					

CABINETS & CABINET PARTS

(When Ordering Specify Model, Chassis & Color)

ITEM	PART No.
MODELS Avanti, Avanti "M", Kismet, Kismet "M", Romano, Romano "M", Tampico, Tampico "M"	
Control Panel	30-272-01
Knob - Tuning	53-596-01
Knob - Treble, Bass, Selector, Tuning	53-596-05
Knob - Level Balance	53-596-04
Knob - Switch, Level Balance	53-617-02

ITEM	PART No.
MODELS Bedford, Bedford "M", Corsair, Corsair "M"	
Control Panel	30-331-01
Knob -Treble, Bass, Selector, Tuning	53-835-01
Knob-Treble, Bass, Selector, Tuning (Rear)	53-427-07
Knob - Level Balance	53-777-03
Knob - Level Balance (Rear)	53-427-08

MISCELLANEOUS

ITEM No.	PART NAME	Electrohome PART No.	NOTES
M3	Switch	26-109-02	Function
M4	Circuit Breaker	26-65-02	1.0 Amp.
M5	Motor		Phono

MULTIPLEX PARTS LIST AND DESCRIPTION

TUBES

ITEM No.	USE (AMPEREX • GENERAL ELECTRIC)	TYPE	ITEM No.	USE (RCA • SYLVANIA)	TYPE
V9	MPX Input Amp.-19KC Amp.	6BL8	V10	19KC Osc.	6C4

POWER RECTIFIERS & SIGNAL DIODES

ITEM No.	MEASURED CURRENT	ORIGINAL Part or Type No.	RECTIFIERS: GENERAL ELECTRIC PART No.	MALLORY PART No.	RCA PART No.	SARKES TARZIAN PART No.	DIODES: GENERAL ELECTRIC PART No.
X3		14-503-03					6GD1
X4		14-503-03					6GD1

FIXED CAPACITORS

ITEM No.	RATING	REMARKS	AEROVOX PART No.	CENTRALAB PART No.	CORNELL-DUBILIER PART No.	ELMENCO PART No.	MALLORY PART No.	SPRAGUE PART No.
C60	.05 150V		P288N-05	DF-503	PM2S5	4DP-3-503	PVC215	2TM-S50
C61	10 10%	①	DI-10	DD-100	LA10Q1-SL	CCD-100	GP410	10TS-Q10
C62	.001 10%		DI-1000	DD-102	JB6D1	CCD-102	GP210	10TS-D10
C63	220 500V 5%			CPR-220J	CD15F221J	DM-19-221J	CNO322	MS-222
C64	220 10%		DI-220	DD-221	LA10T22-S3	CCD-221	GP322	10TS-T22
C65	.0022 500V 5%			CPR-2200J	CD19F222J	DM-19-222J		MS-222
C66	.01		BPD-01	DD-103	BYA10S1	CCD-103	B110	5HK-S10
C67	.0068 300V 5%		ADM-30-682	CPR-6800J	CD30F682J	DM-30-682J		MS-268
C68	680 10%		DI-680	DD-681	JB6T68	CCD-681	GP368	10TS-T68
C69	.0033 500V 5%			CPR-3300J	CD15F332J	DM-19-332J		MS-233
C70	.0033 500V 5%			CPR-3300J	CD15F332J	DM-19-332J		MS-233
C71	.04			DD-403		CCD-403	GP140	5HK-S40
C72	220 10%		DI-220	DD-221	LA10T22-S3	CCD-221	GP322	10TS-T22
C73	.01		BPD-01	DD-103	BYA10S1	CCD-103	B110	5HK-S10
C74	.01		BPD-01	DD-103	BYA10S1	CCD-103	B110	5HK-S10
C75	680 10%		DI-680	DD-681	JB6T68	CCD-681	GP368	10TS-T68
C76	680 10%		DI-680	DD-681	JB6T68	CCD-681	GP368	10TS-T68
C77	680 10%		DI-680	DD-681	JB6T68	CCD-681	GP368	10TS-T68
C78	680 10%		DI-680	DD-681	JB6T68	CCD-681	GP368	10TS-T68
C79	.005	(.001) †	BPD-005	DD-502	BYA10D5	CCD-502	B250	5HK-D50
C80	.005	(.001) †	BPD-005	DD-502	BYA10D5	CCD-502	B250	5HK-D50

① Not used in some versions.
† Alternate Value.

COILS (RF-IF)

ITEM No.	USE	Electrohome PART No.	MEISSNER PART No.	MERIT PART No.	MILLER PART No.	STANCOR PART No.	WORKMAN PART No.
L17	67KC Trap	21-334-03			6210		
L18	19KC Input	21-334-03			6210		
L19	19KC Osc.	21-483-01					
L20	38KC Output	21-482-01					

ELECTROHOME MODELS BEDFORD, BEDFORD M, CORSAIR, CORSAIR M, ROMANO, ROMANO M, TAMPICO, TAMPICO M

FOLDER 6