2002

MITSUBISHI ELECTRIC

Service Manual

PROJECTION TELEVISION
V20A / V20C / V20C+ CHASSIS

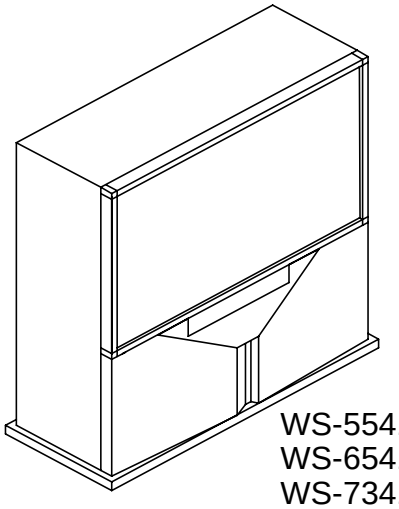

WS-55411
WS-65411
WS-73411

V20A MODELS	V20C MODELS	V20C+ MODELS
VS-50111	WS-48311	WS-55411
VS-60111	WS-55311	WS-65411
	WS-65311	WS-73411

CAUTION:
Before servicing this chassis, it is important that the service person read the "SAFETY PRECAUTIONS" and "PRODUCT SAFETY NOTICE" contained in this manual.

SPECIFICATIONS

- **Power** : AC 120V, 60Hz
  240W (Except WS-73411)
  275W (WS-73411 Only)
- **Frequency Range** : VHF 54 ~ 470MHz
  UHF 470 ~ 806MHz
- **Antenna Input** : VHF/UHF 75Ω unbalanced
- **CRT Size** : [7 inches] all but WS-73411
  : [9 inches] WS-73411 only
- **High Voltage** : 32.0kV (at 0A)
- **Weight / Cabinet Demensions**

Model	Weight	Height	Width	Depth
VS-50111	200 lbs	50.3"	42.4"	23.6"
VS-60111	263.5 lbs	60.8"	50.6"	29.2"
WS-48311	171.5 lbs	49"	44.5"	23"
WS-55311	237 lbs	50"	50.6"	26.3"
WS-55411	250 lbs	50.4"	50.6"	27.9"
WS-65311	326.5 lbs	61.9"	59"	28.1"
WS-65411	326.5 lbs	61.9"	59"	28.1"
WS-73411	400 lbs	66.1"	66.1"	28.9"

- Weight and dimensions shown are approximate.
- Design specifications are subject to change without notice.

- **Speaker** : [VS-50111 / VS-60111]
  Two 4" round, full range (8Ω 5W)
  : [WS-48311 / WS-55311 / WS-65311]
  Two 5" round, full range (8Ω 10W)
  : [WS-55411 / WS-65411 / WS-73411]
  Two 6" round, full range (8Ω 10W)
- **Input Level** : VIDEO IN JACK (RCA Type)
  1.0Vp-p 75Ω unbalanced
  : AUDIO IN JACK (RCA Type)
  -4.7dBm 43kΩ unbalanced
  : S-VIDEO IN JACK (Y/C separate)
  Y=1.0 Vp-p C=0.286Vp-p(BURST)
  75Ω unbalanced
  : COMP / Y, Cr, Cb (RCA Type)
  Y=1.0 Vp-p. Cr, Cb=700mVp-p
  : ATV / Y(G), Pr(R), Pb(B), H, V
  Y 1.0Vp-p with sync 75Ω (RCA Type)
  Pr, Pb: 700mV 75Ω
  H, V: 3.0Vp-p 75Ω
- **Output Level** : VIDEO OUT JACK (RCA Type)
  1.0Vp-p 75Ω unbalanced
  : AUDIO OUT JACK (RCA Type)
  -4.7dBm 4.7kΩ unbalanced

MITSUBISHI DIGITAL ELECTRONICS AMERICA, INC.
9351 Jeronimo Road, Irvine, CA 92618-1904
Copyright © 2002 Mitsubishi Digital Electronics America, Inc.
All Rights Reserved

CONTENTS

INTRODUCTION **5**

PRODUCT SAFETY NOTICE **5**

SAFETY PRECAUTIONS **6**

CABINET DISASSEMBLY
- WS-48311 (Front View) 7
- WS-48311 (Rear View) 8
- VS-50111 / VS-60111 / WS-55311 / WS-65311 (Front View) 9
- WS-55411 / WS-65411 / WS-73411 (Front View) 10
- VS-50111 / VS-60111 / WS-55311 / WS-55411 / WS-65311 / WS-65411 / WS-73411 (Rear View) 11

SERVICING THE LENTICULAR SCREEN AND FRESNEL LENS
- **Lenticular Screen and Fresnel Lens Removal** **12**
  - VS-50111 / VS-60111 / WS-55311 / WS-65311 12
  - WS-55411 / WS-65411 / WS-73411 13
  - WS-48311 14
- **Lenticular Screen and Fresnel Lens Installation** **15**

CABINET SEPARATION
- WS-65311 / WS-65411 / WS-73411 16

SERVICING THE DIAMONDSHIELDS™
- DiamondShield ™ Removal & Installation 17

SERVICING PCBs
- Chassis Removal 18
- PCB Locations 18
- Main Components Location 18
- Second Anode Lead Removal 19

CRT REPLACEMENT
- CRT Removal 19
- CRT Installation 20

ELECTRICAL ADJUSTMENTS
- Test Equipment 22
- Initial Setup 23
- LED Indicator Diagnostics 24
- Circuit Adjustment Mode 25
- Convergence Adjustment Mode 26
- Adjustment Items List 28
- Adjustment Test Points 31
- Adjustment Procedures
  - High Voltage Regulation 32
  - Main/Sub Y Level 32
  - Main/Sub Color Level 33
  - CRT Cutoff 33
  - White Balance (NTSC) 34
  - White Balance (HD) 34
  - Black Level 35
  - Sub Contrast 35

Dynamic Focus Preset 36
Lens Focus 36
Electrostatic Focus & Alignment Magnet Adjustment 37
On Screen Display Character Position 37
Deflection/Convergence Geometry Presets 38
Deflection Circuit Geometry Adjustments 39
Convergence Circuit Geometry Adjustments 40
Centering and Static Convergence 41
Coarse Convergence Adjustments 42
Fine Convergence Adjustments 43

CHIP PARTS REPLACEMENT 44

REPLACEMENT PARTS
Parts Ordering 45
Critical and Warranty Parts Designation 45
Parts Tolerance Codes 45
Replacement Part Notes
When replacing the RF-Switch or PCB-SIGNAL 45
When replacing the EEPROM 45
Quick Reference List 46
Service Parts List 47
Screen Parts List 58

CIRCUITRY BLOCK DIAGRAMS
Power Supply 61
Video / Color Signal Path 62
Sync Signal Path 63
Deflection / HV 64
X-Ray Protect 65
HV Regulation 66
Sound Signal Path 67
Convergence 68
Control Circuitry 69

Section 2 .... Schematic Diagrams

SCHEMATIC DIAGRAMS
Overall Block Diagram 1
PCB-MAIN 2
PCB-POWER 3
PCB-TERMINAL (Input Sw) 4
PCB-TERMINAL (3DYC / Decoders) 5
PCB-SIGNAL-1 (AV I.O) 6
PCB-SIGNAL-2 (Micro) 7
PCB-SIGNAL-3 (VCJ) 8
PCB-SIGNAL-4 (Convergence Generator) 9
PCBs - FRONT / CONTROL / CRT / PREAMP 10
PCB-2HDW-1 (Input) 11
PCB-2HDW-2) (Main) 12
PCB-2HDW-3 (Output) 13

PCB LAYOUT DIAGRAMS 14

INTRODUCTION

This service manual provides service instructions for the PTV Models listed below. Service personnel should read this manual thoroughly before servicing these chassis.

V20A Chassis	V20C Chassis	V20C+ Chassis
VS-50111	WS-48311	WS-55411
VS-60111	WS-55311	WS-65411
	WS-65311	WS-73411

This service manual includes:

1. Assembly and disassembly instructions for the front and rear cabinet components.
2. Servicing of the Lenticular Screen and Fresnel Lens.
3. Servicing printed circuit boards (PCBs).
4. CRT replacement procedure.
5. Electrical adjustments.
6. Chip parts replacement procedures.
7. Circuit path diagrams.

The parts list section of this service manual includes:

1. Cabinet and screen parts.
2. Electrical parts.

Schematic and block diagrams of the above listed models are included in this service manual for better understanding of the circuitry. PCB drawings are also included for easy location of parts and test points.

PRODUCT SAFETY NOTICE

Many electrical and mechanical parts in television receivers have special safety related characteristics. These characteristics are often not evident from visual inspection nor can the protection afforded by them necessarily be obtained by using replacement components rated for higher voltage, wattage, etc.

Replacement parts which have special safety characteristics are identified in this service manual.

Electrical components having such features are identified by shading on the schematic diagram and by **bold type** in the parts list of this service manual. **The replacement for any safety part should be identical in value and characteristics.**

SAFETY PRECAUTIONS

NOTICE: Observe all cautions and safety related notes located inside the receiver cabinet and on the receiver chassis.

WARNING:

1. Operation of this receiver outside the cabinet or with the cover removed presents a shock hazard from the receiver's power supplies. Work on the receiver should not be attempted by anyone who is not thoroughly familiar with the precautions necessary when working on high voltage equipment.
2. Do not install, remove or handle the picture tubes in any manner unless shatterproof goggles are worn. People not so equipped should be kept away while the picture tube is being handled. Keep the picture tube away from the body while handling.
3. When service is required, observe the original lead dress. Extra precaution should be taken to assure correct lead dress in the high voltage area. Where a short-circuit has occurred, replace those components that indicate evidence of overheating.

X-Radiation warning

The surface of the cathode ray tubes (CRTs) may generate X-Radiation, so take proper precautions when servicing. It is recommended that a lead apron be used for shielding while handling the CRT. Use this method if possible.

When replacing the CRTs, use only the designated replacement part since it is a critical component with regard to X-Radiation. High voltage must be set as prescribed under the section titled Electrical Adjustments.

Leakage current check

Before returning the receiver to the customer, it is recommended that leakage current be measured according to the following methods.

1. *Cold Check*

   With the alternating current (AC) plug removed from the AC source, place a jumper across the two AC plug prongs. Connect one lead of an ohm meter to the AC plug and touch the other lead to each exposed metal part (i.e. antennas, handle bracket, metal cabinet, screw heads, metal overlay, control shafts, etc.), particularly any exposed metal part that has a return path to the chassis. The resistance of the exposed metal parts having a return path to the chassis **should be a minimum of 1Mega Ohm**. Any resistance below this value indicates an abnormal condition and requires corrective action.

2. *Hot Check ...Use the circuit shown below to perform the hot check test.*

   1. Keep switch S1 open and connect the receiver to the measuring circuit. Immediately after connection, and with the switching devices of the receiver in their operating positions, measure the leakage current for both positions of switch S2.
   2. Close switch S1, energizing the receiver. Immediately after closing switch S1, and with the switching devices of the receiver in their operating positions, measure the leakage current for both positions of switch S2. Repeat the current measurements of items 1 and 2 after the receiver has reached thermal stabilization. **The leakage current must not exceed 0.5 milliampere (mA).**

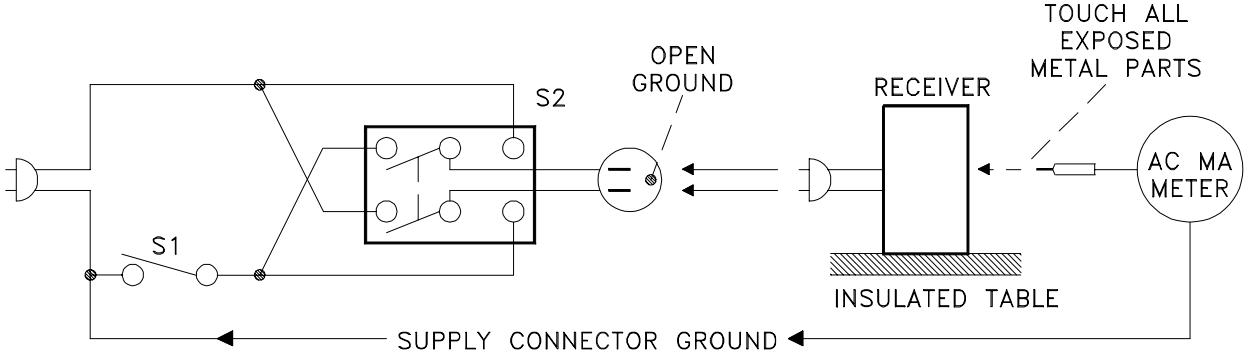

CABINET DISASSEMBLY (FRONT VIEW)

WS-48311

***Refer to PARTS LIST for Part Numbers**

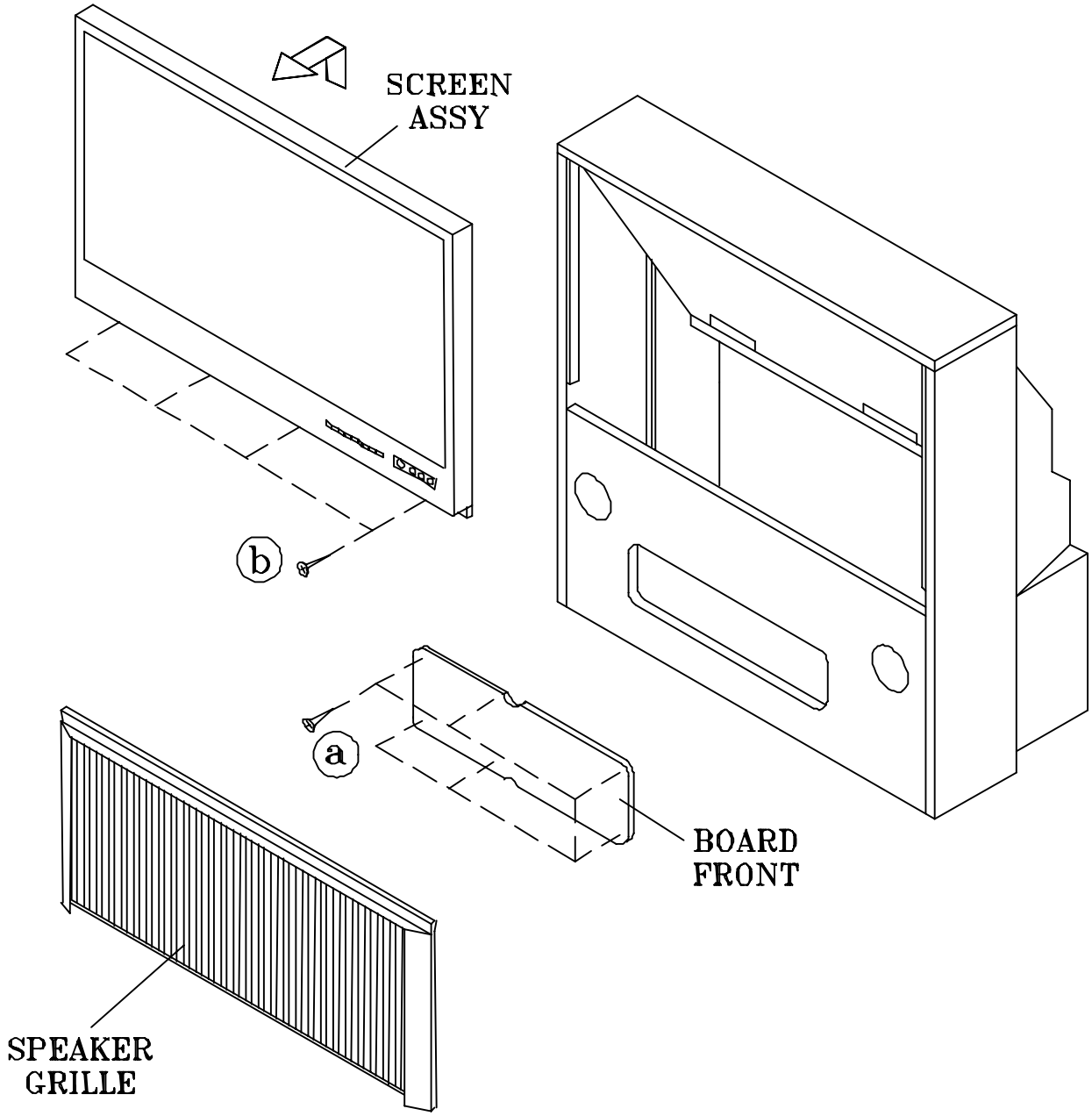

Front Cabinet Disassembly

1. Remove the Speaker Grille by pulling forward.
2. Remove the Board-Front by removing screws "a".
3. Remove the Screen Assembly by removing screws "b". Disconnect all cable harnesses between the Screen Assembly and the PCB-Signal.
4. Lift the Screen Assembly and pull up and away from the cabinet as shown.

CABINET DISASSEMBLY (REAR VIEW)

WS-48311

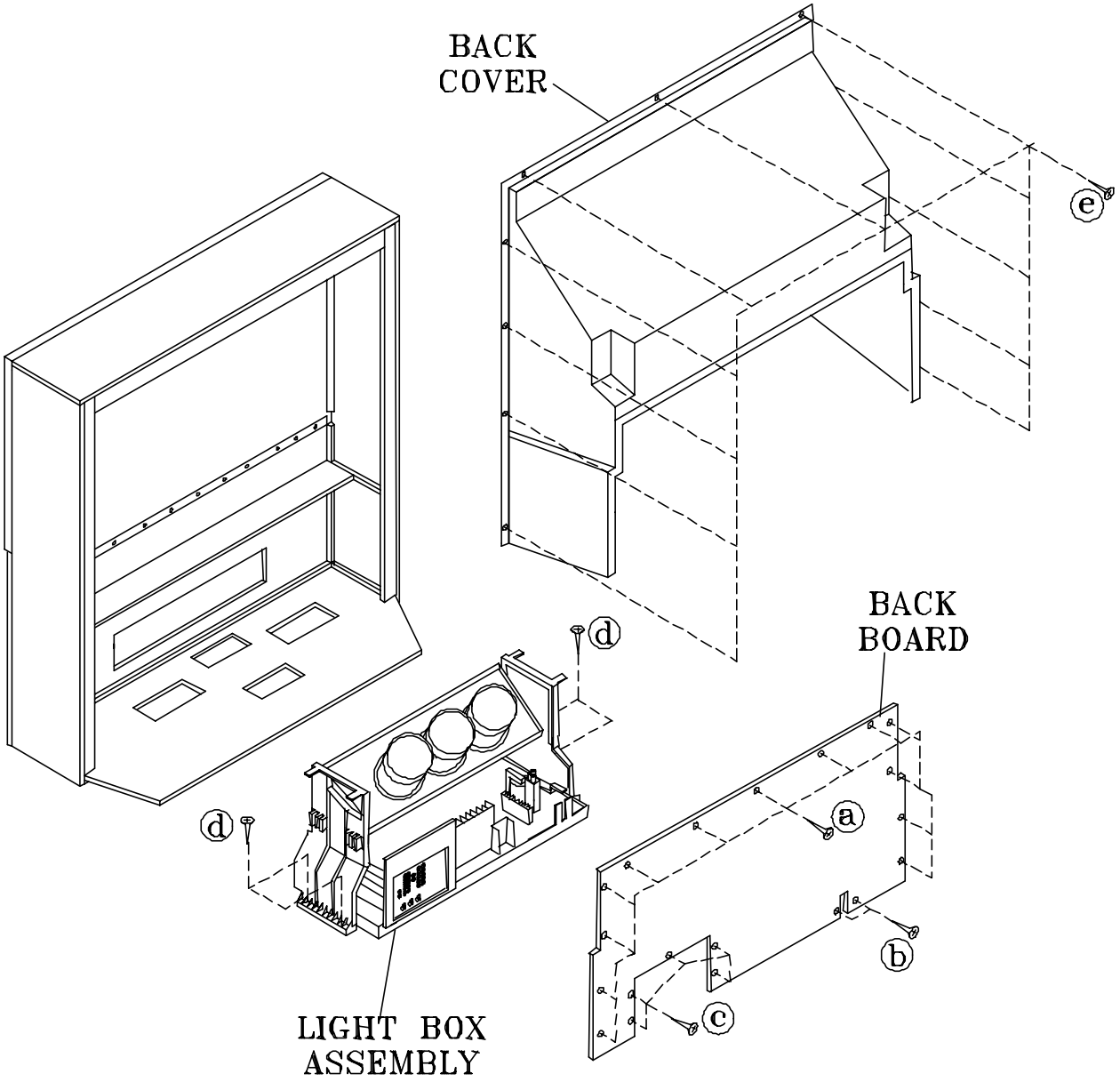

Rear Cabinet Disassembly

1. Remove the Back Board by removing screws "a", “b” and “c”.
2. Remove the Back Cover by removing screws "e".
3. Remove 4 screws "d" securing the Light Box Assembly.
4. Be certain that all cables and connectors between the Light Box Assembly and external items are disconnected (e.g. speaker plugs).
5. Slide the Light Box Assembly out of the cabinet.

CABINET DISASSEMBLY (FRONT VIEW)

VS-50111 VS-60111	WS-55311 WS-65311

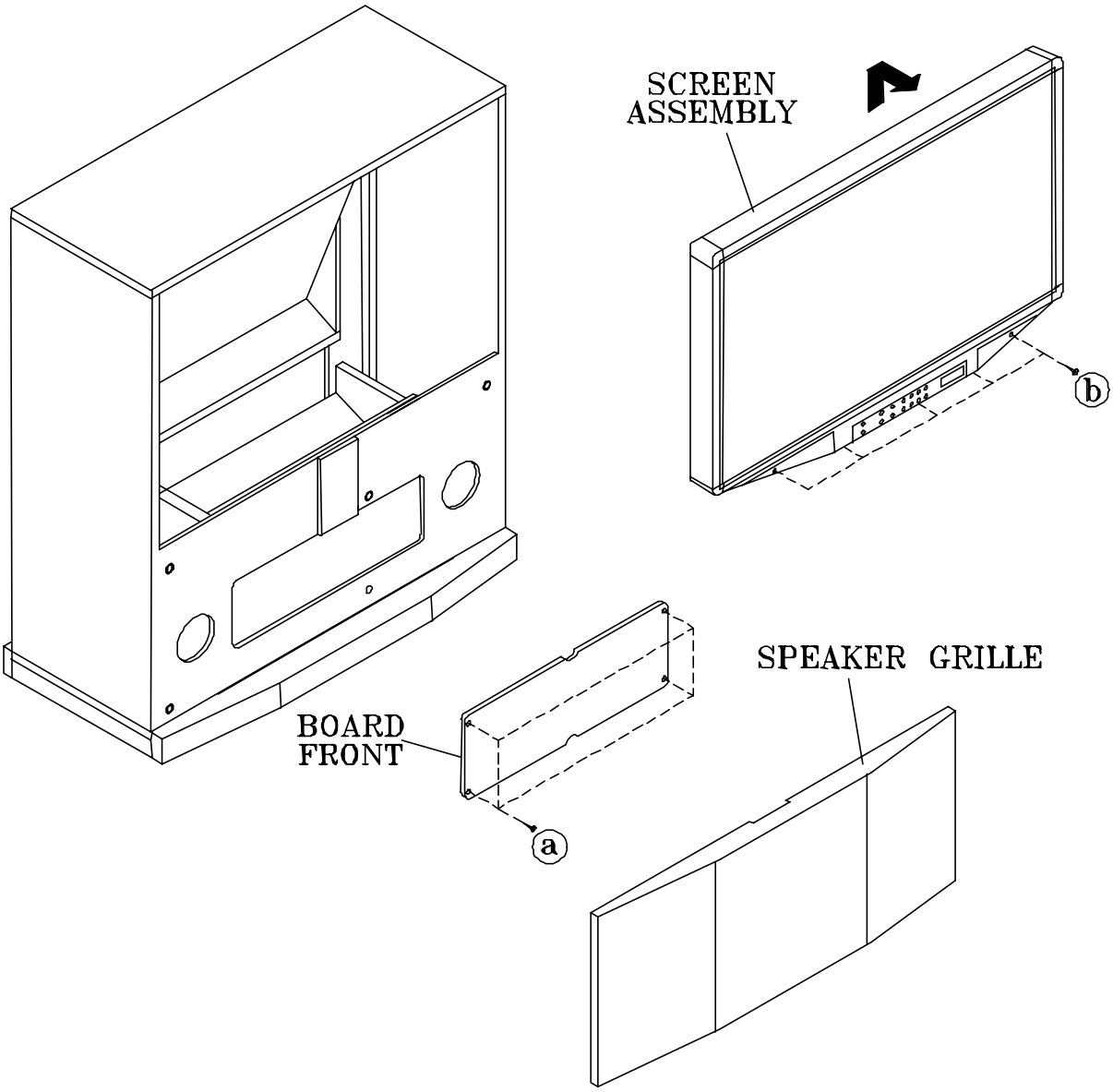

Front Cabinet Disassembly

1. Remove the Speaker Grille by pulling forward.
2. Remove the Front-Board by removing screws "a".
3. Remove the Screen Assembly by removing screws "b". Disconnect all cable harnesses between the Screen Assembly and the PCB-Signal.
4. Lift the Screen Assembly and pull up and away from the cabinet as shown.

CABINET DISASSEMBLY (FRONT VIEW)

WS-55411	WS-65411	WS-73411

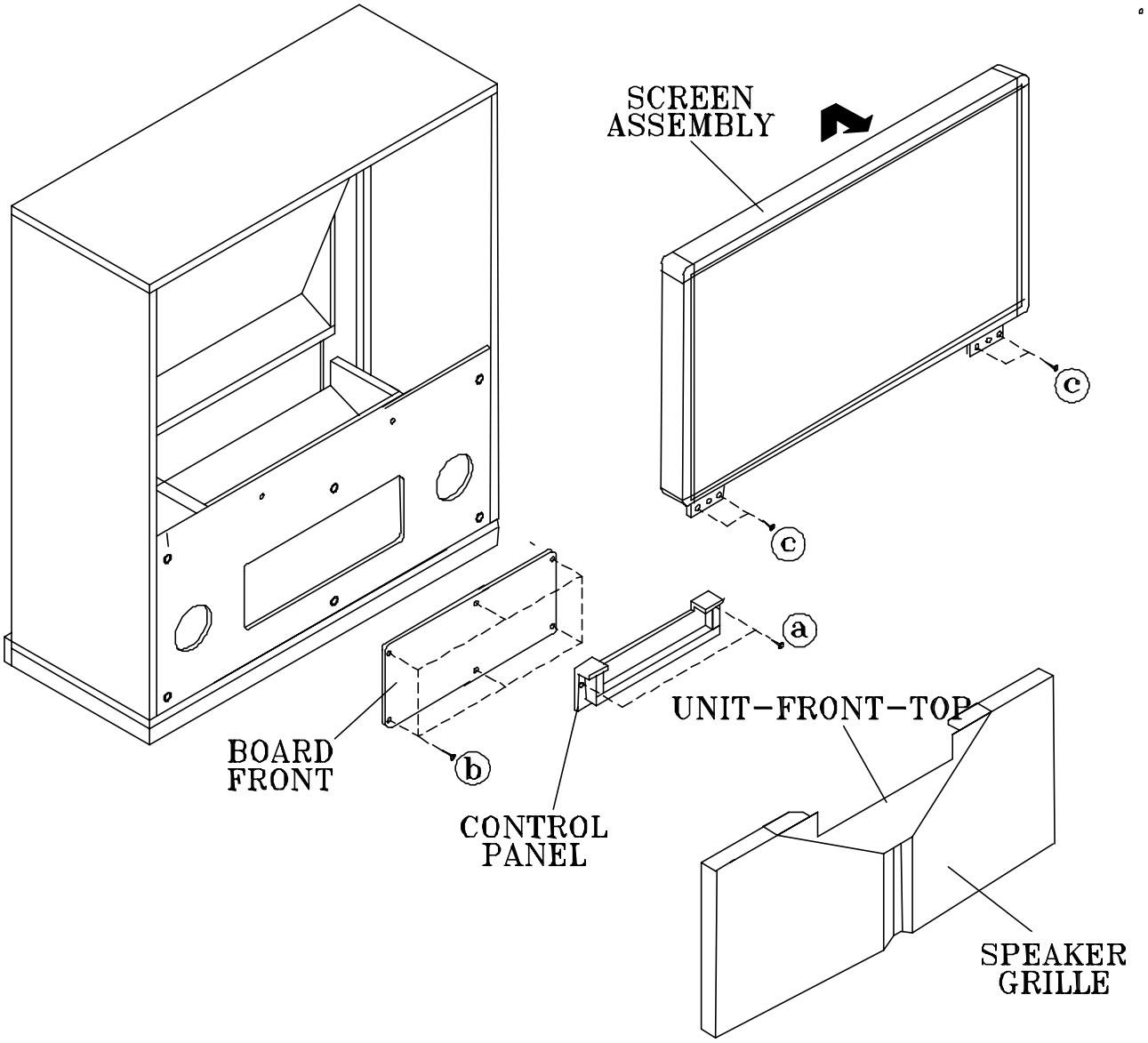

Front Cabinet Disassembly

1. Remove the Speaker Grille by pulling forward.
2, Remove the Control Panel by removing screws “a”.
3. Remove the Board-Front by removing screws "b".
4. Remove the Screen Assembly by removing screws "c". Disconnect all cable harnesses between the Screen Assembly and the PCB-Signal.
4. Lift the Screen Assembly and pull up and away from the cabinet as shown.

CABINET DISASSEMBLY (REAR VIEW)

VS-50111 VS-60111	WS-55311 WS-55411 WS-65311	WS-65411 WS-73411

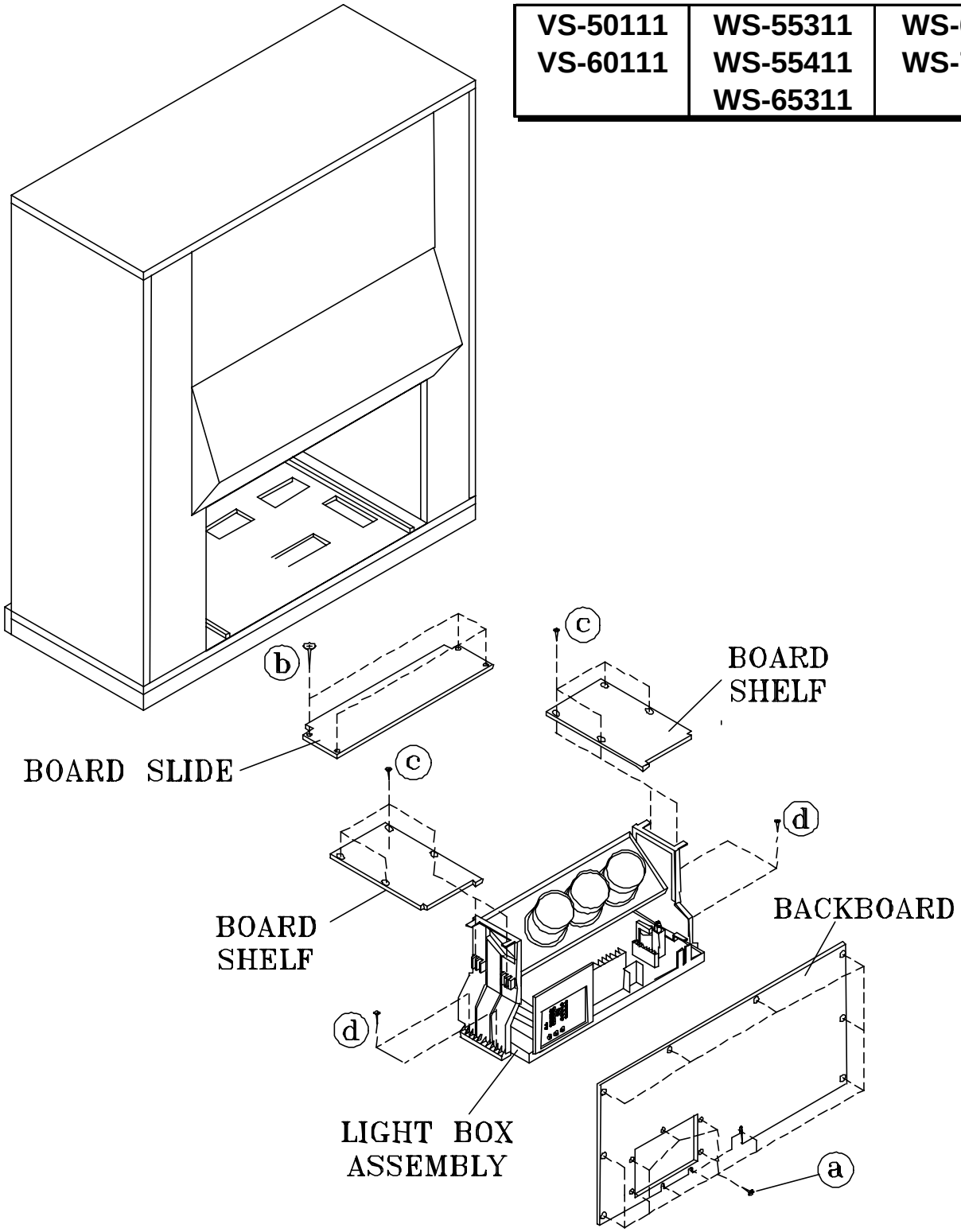

Rear Cabinet Disassembly

1. Remove the Back Board by removing screws "a".
2. Remove the Board Slide by removing screws “b”.
3. Remove the two Board Shelves by removing screws “c”.
4. Remove 4 screws "d" securing the Light Box Assembly.
5. Be certain that all cables and connectors between the Light Box Assembly and external items are disconnected (e.g. speaker plugs).
6. Slide the Light Box Assembly out of the cabinet.

SERVICING THE LENTICULAR SCREEN AND FRESNEL LENS

VS-50111	WS-55311
VS-60111	WS-65311

1. Removal of the Lenticular Screen and Fresnel Lens

CAUTION: **Wear gloves** when handling the Lenticular Screen and the Fresnel Lens. This prevents cuts and finger prints. **Do not place the Fresnel Lens in the sun**. This may cause fire and heat related injuries.

1. Remove the screen assembly as shown in the Cabinet Disassembly procedure.
2. Remove the Screen Holder by removing screws (a).
3. Slide the Lenticular Screen and Fresnel Lens from the Screen Frame.

Note: When separating the Lenticular Screen from the Fresnel Lens, use caution while prying the Screen and Lens apart. Use a slot type screw driver, and remove the pressure sensitive, double sided tape.

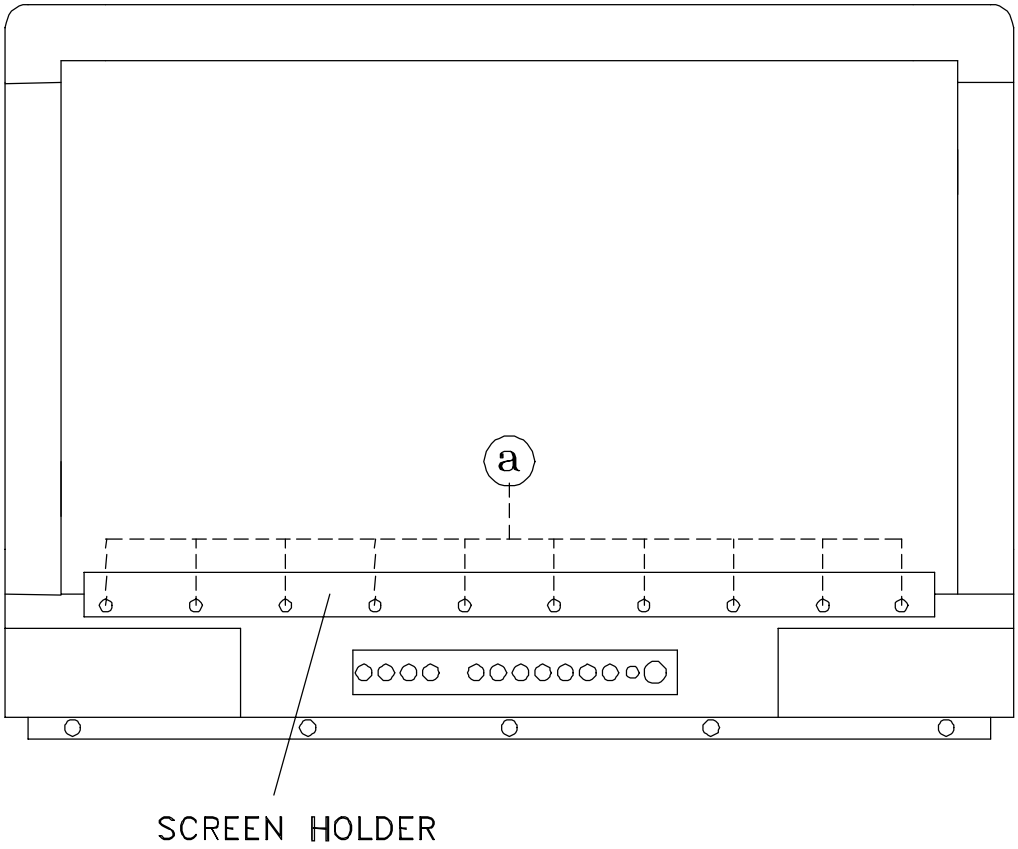

SERVICING THE LENTICULAR SCREEN AND FRESNEL LENS

WS-55411	WS-65411	WS-73411

CAUTION: **Wear gloves** when handling the Lenticular Screen and Fresnel Lens. This prevents cuts and finger prints. **Do not place Fresnel Lens in the sun**. This may cause fire and heat related injuries.

1b. Lenticular Screen and Fresnel Lens Removal

1. Remove the screen assembly as shown in the Cabinet Disassembly procedure.
2. Remove the Screen Frame top section by removing 4 screws (a).
3. Carefully grasp the Lenticular Screen and Fresnel Lens combination and pull upward and out of the Screen Frame Assembly.

Note: When separating the Lenticular Screen from the Fresnel Lens, use caution while prying the Screen and Lens apart. Use a slot type screw drive, and remove the pressure sensitive double sided tape.

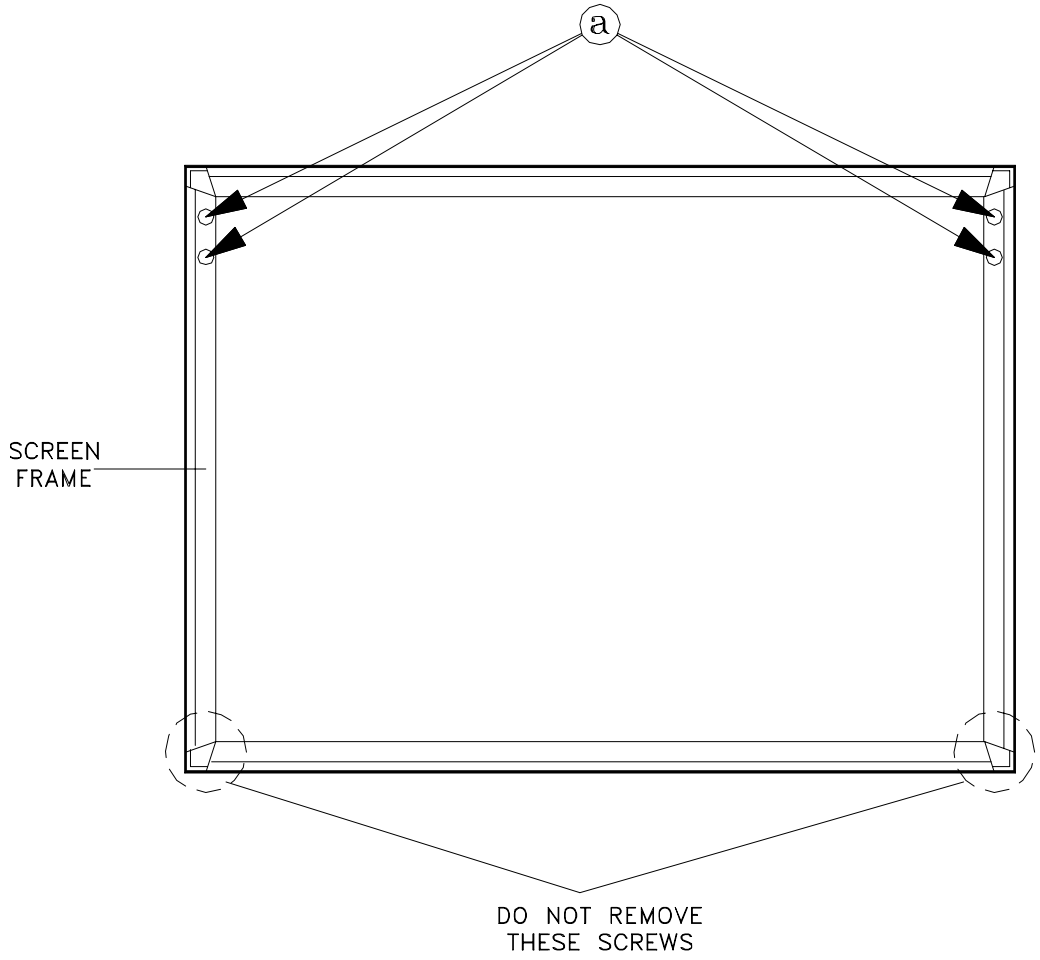

SERVICING THE LENTICULAR SCREEN AND FRESNEL LENS

WS-48311

CAUTION: **Wear gloves** when handling the Lenticular Screen and Fresnel Lens. This prevents cuts and finger prints. **Do not place Fresnel Lens in the sun**. This may cause fire and heat related injuries.

1c. Lenticular Screen and Fresnel Lens Removal

1. Remove the screen assembly as shown in the Cabinet Disassembly procedure.
2. Remove the Top, Bottom and Side Holder Screens..
3. Carefully lift the Lenticular Screen and Fresnel Lens combination from the Screen Frame Assembly.

Note: When separating the Lenticular Screen from the Fresnel Lens, use caution while prying the Screen and Lens apart. Use a slot type screw drive, and remove the pressure sensitive double sided tape.

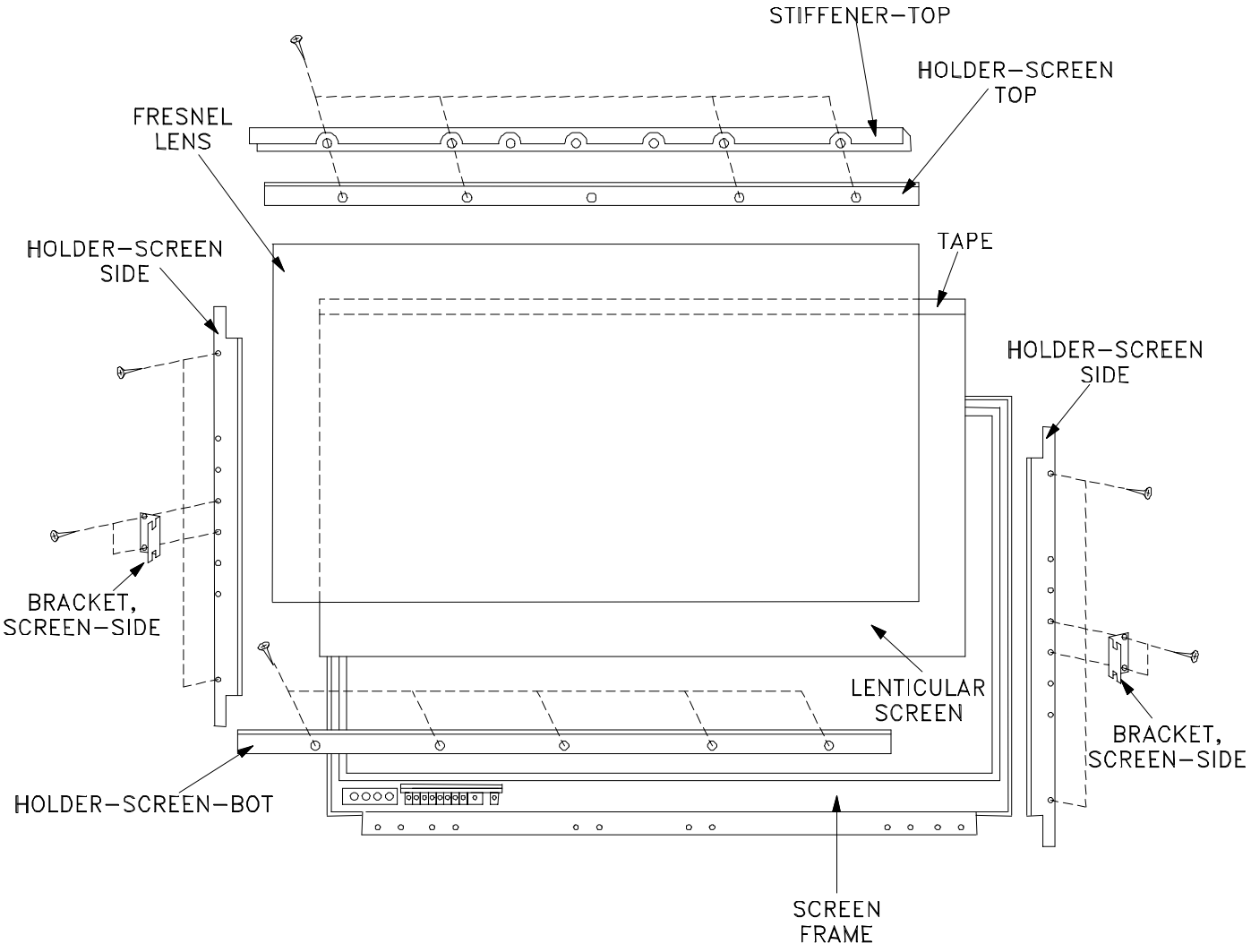

2. Installation of the Lenticular Screen and Fresnel Lens

Note: Store the Lenticular Screen and Fresnel Lens in a cool dry place. High humidity may deform the Lenticular Screen and Fresnel Lens.

1. Apply double coated tape (Part # LENS-TAPE) along the top front edge of the Fresnel Lens as shown in *Figure 2-2*. Refer to *Table A* and *Table B* for proper tape length.
2. Place the Fresnel Lens on top of the Lenticular Screen and apply pressure at the top edge to bond them together as shown in *Figure 2-2*.
3. Reverse the disassembly procedure for that model to install the screens in the screen frame.

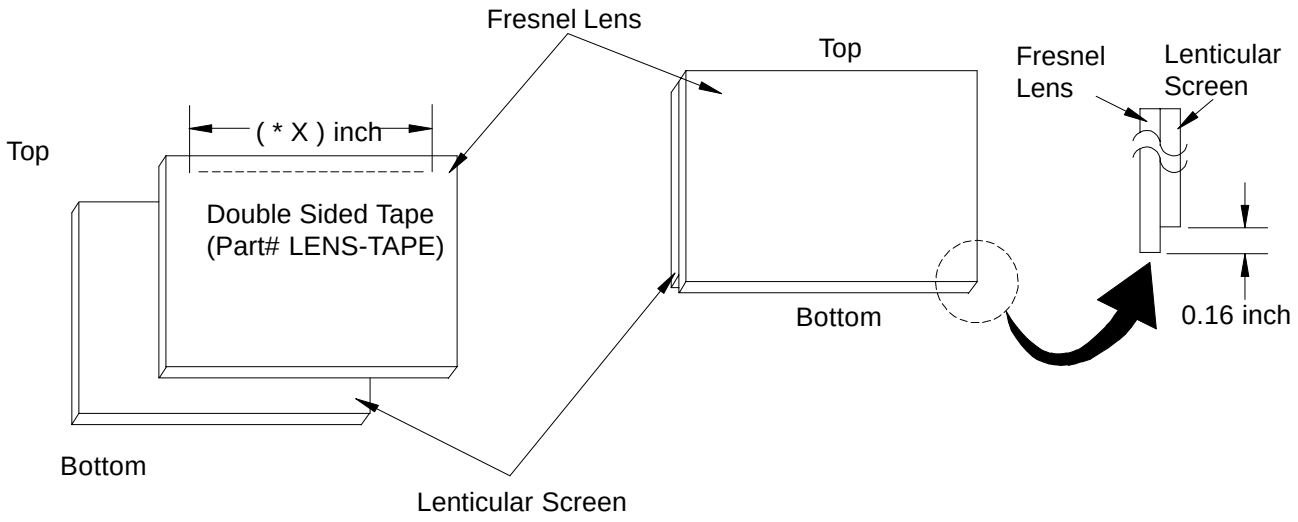

Figure 2-2

4:3 Aspect Models

Model	Screen Size	Tape Length
VS-50111	50"	40"
VS-60111	60"	47.9"

Table A

16:9 Aspect Models

Model	Screen Size	Tape Length
WS-48311	48"	41.76
WS-55311	55"	47.85
WS-55411	55"	47.85
WS-65311	65"	56.55
WS-65411	65"	56.55
WS-73411	73"	63.51

Table B

CABINET SEPARATION PROCEDURE
(WS-65311 / WS-65411 / WS-73411)

Models WS-65311, WS-65411 and WS-73411 cabinets are assembled in two pieces. These two pieces may be separated to allow easier delivery and setup.

WS-65311
Cabinet Separation Precedure

1. Remove the Screen Assembly and disconnect all cable harnesses between the Frame Assembly and the PCB-SIGNAL, refer to Cabinet Front Disassembly.
2. Remove the 4 screw covers “a”.
3. Remove 4 screws “b” securing the top and bottom cabinet sections .
4. Carefully lift the cabinet top and place it on the floor.
5. Place the cabinet bottom in the desired location.
6. Reverse the procedure and mount the cabinet top on the cabinet bottom.
7. Reinstall the the Screen Assembly and connect all cable harnesses between the Screen Assembly and the PCB-SIGNAL.

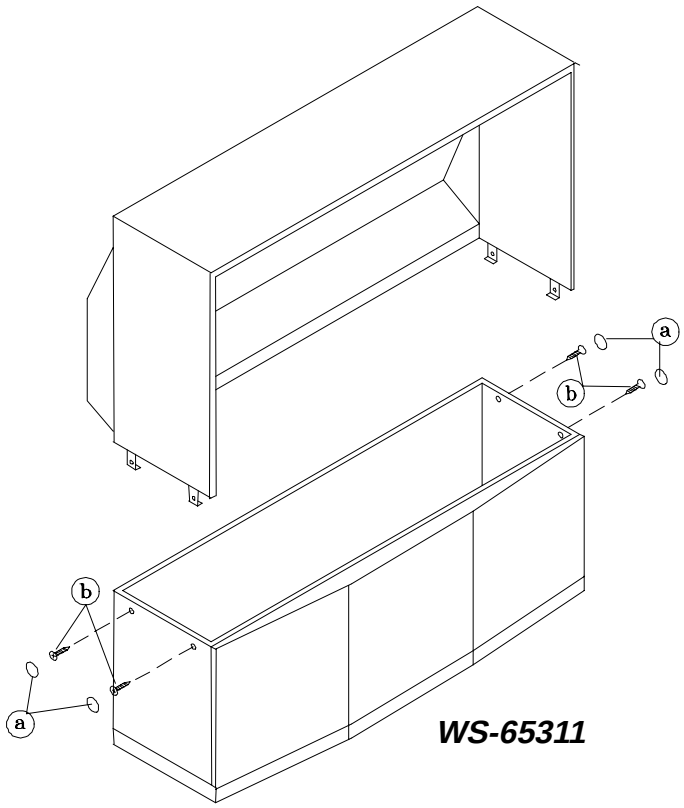

WS-65311

WS-65411 / WS-73411
Cabinet Separation Precedure

1. Remove the 4 screw covers “a”.
2. Remove 4 screws “b” securing the top and bottom cabinet sections .
3. Carefully lift the cabinet top and place it on the floor.
4. Place the cabinet bottom in the desired location.
5. Reverse the procedure and mount the cabinet top on the cabinet bottom.

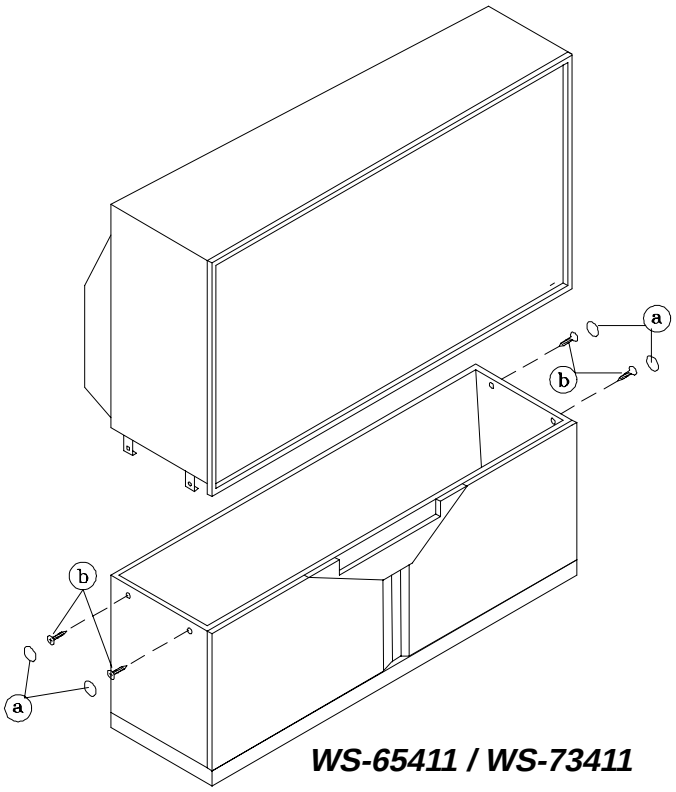

WS-65411 / WS-73411

SERVICING THE DIAMONDSHIELD™

1. DiamondShield™ Removal Procedure

The location of the DiamondShield™ molding clips may vary between models, top and bottom, or sides. Use the appropriate disassembly procedure given below.

Note: ***Wear gloves when handling the DiamondShield™ to prevent finger prints.***

Top & Bottom Molding Clips

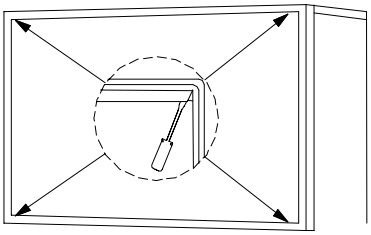

1. Gently insert a small screwdriver between the DiamondShield™ and one end of the clip to pry the clip loose.

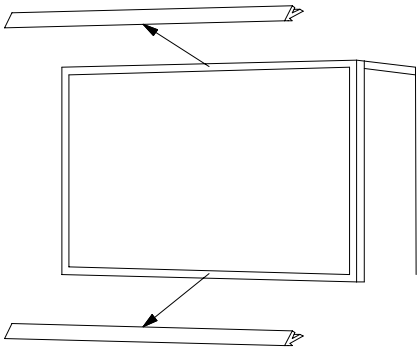

2. Remove both clips by pulling them toward you.

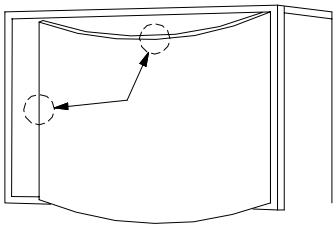

3. Carefully insert a small screwdriver into the gap at the top/center point of the Shield and pull the Shield slightly away from the unit. Place your hands at the points shown and gently bow the Shield toward you and remove from the unit. Then re-install the two clips.

Side Molding Clips

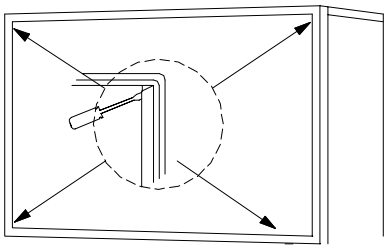

1. Gently insert a small screwdriver between the DiamondShield™ and one end of the clip to pry the clip loose.

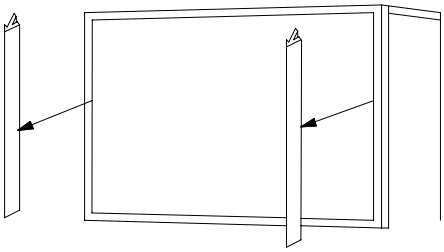

2. Remove both clips by pulling them toward you.

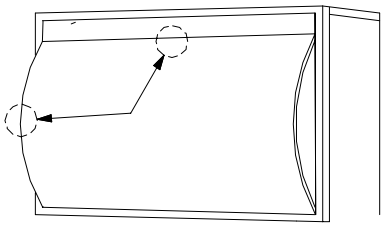

3. Carefully insert a small screwdriver into the gap at the side/center point of the Shield and pull the Shield slightly away from the unit. Place your hands at the points shown and gently bow the Shield toward you and remove from the unit. Then re-install the two clips.

2. DiamondShield™ Installation Procedure

*(See the Parts List for DiamondShield™ part numbers)

To install the DiamondShieldTM, reverse the above Removal Procedure.

SERVICING PCBs

Chassis Removal and PCB Locations

Chassis Removal

1) Remove screw “a” from the Main Chassis.
2) Raise the two chassis locks on the inner sides of the Lightbox Assembly and slide the chassis towards the rear.

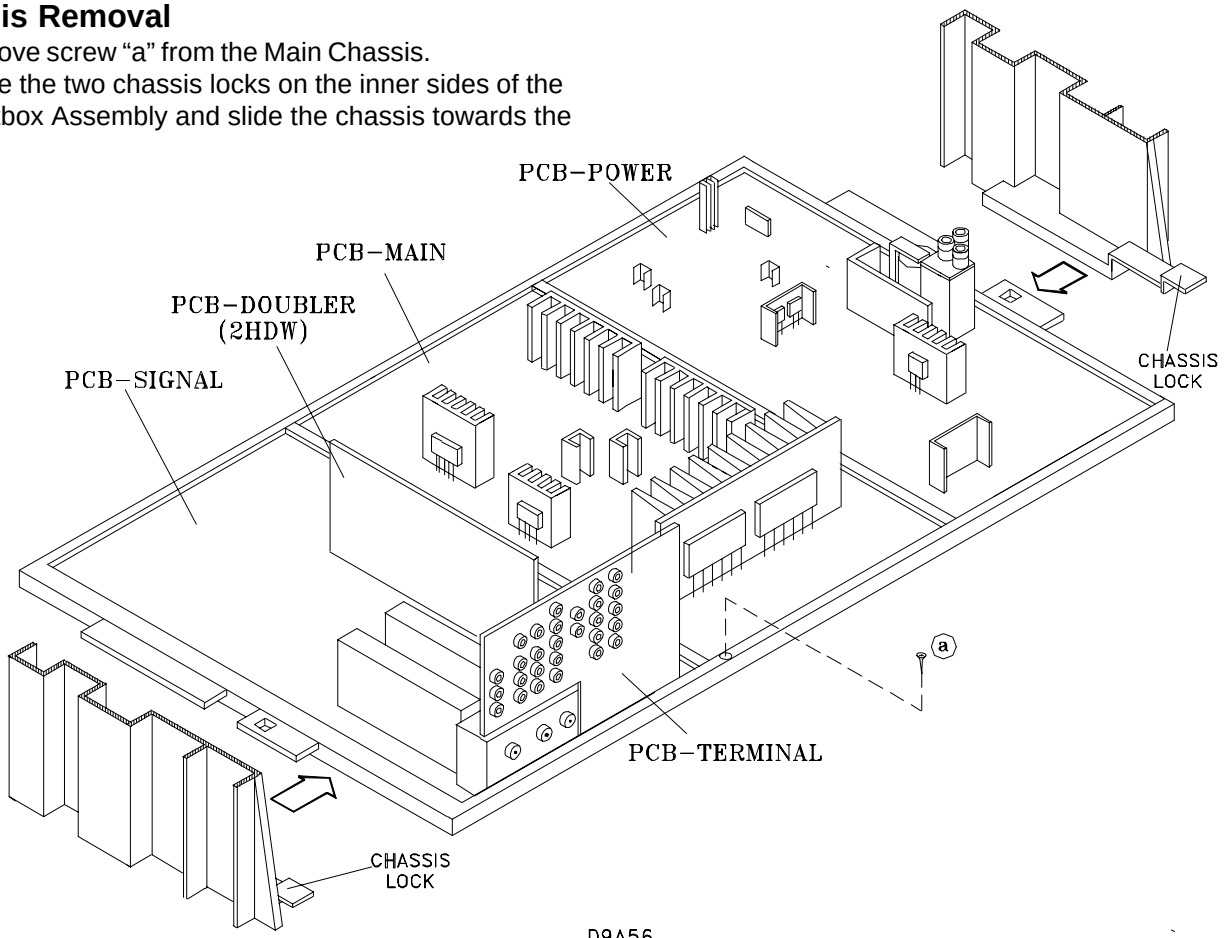

Major Parts Locations

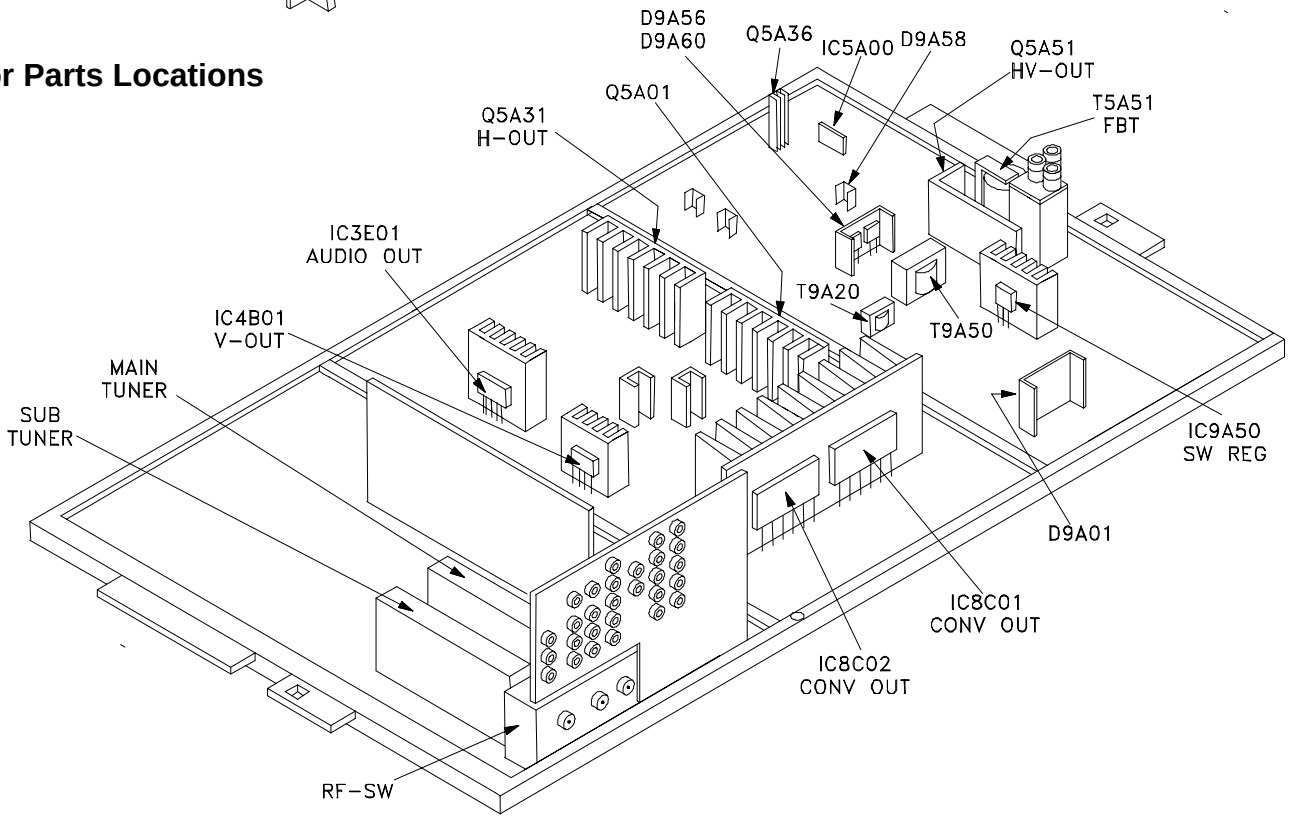

ANODE LEAD REMOVAL

CAUTION: To prevent damage, the following procedure must be used when removing an Anode Lead from the Flyback Transformer.

1) Push the Anode Lead down.

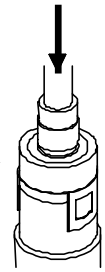

2) While holding the lead down rotate the lead 90º counter clockwise.

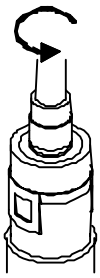

3) Carefully remove the Anode Lead from the Flyback Transformer.

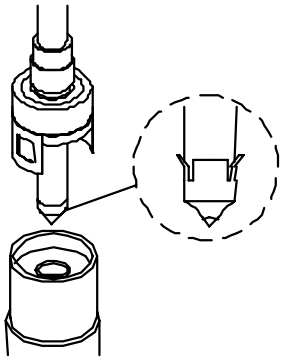

CRT REPLACEMENT

1. Removal of the CRT

Caution! High voltage should be completely discharged prior to CRT removal. Since the CRTs receive high voltage from the Flyback transformer, discharge by shorting the open end of the respective high voltage cable to chassis ground.

Note: Refer to Cabinet Disassembly when performing steps 1 through 4.

1. Remove the Speaker Grille, Front Board, and Screen Assy.
2. Remove the Back Board.
3. Remove the Anode Lead Wire from the Flyback transformer. (Use the above procedure)
4. Remove the PCB-CRT.
5. Remove 4 hex-screws "a" retaining the Optical Unit. [Figure 5-1]
6. Remove 4 screws "b" retaining the Lens.
   Note: DO NOT loosen the RED screws. Doing so will break the seal between the C-Element and the # 6 Lens, causing leakage of the CRT Coolant.
7. Remove 4 screws "c" retaining the CRT. [Figure 5-2]
8. Remove the Deflection Yoke from the neck of the CRT. [Figure 5-7]

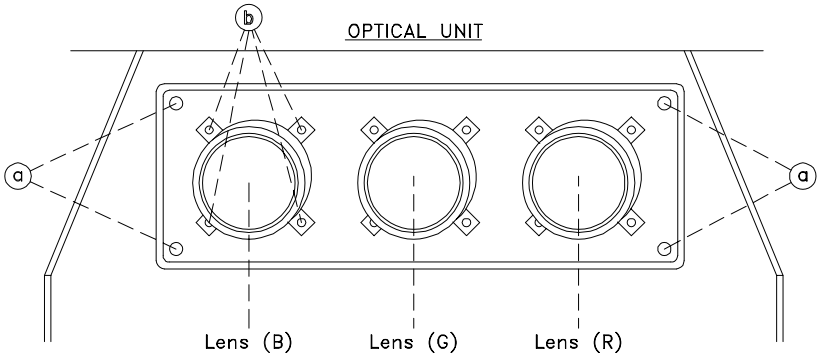

Figure 5-1

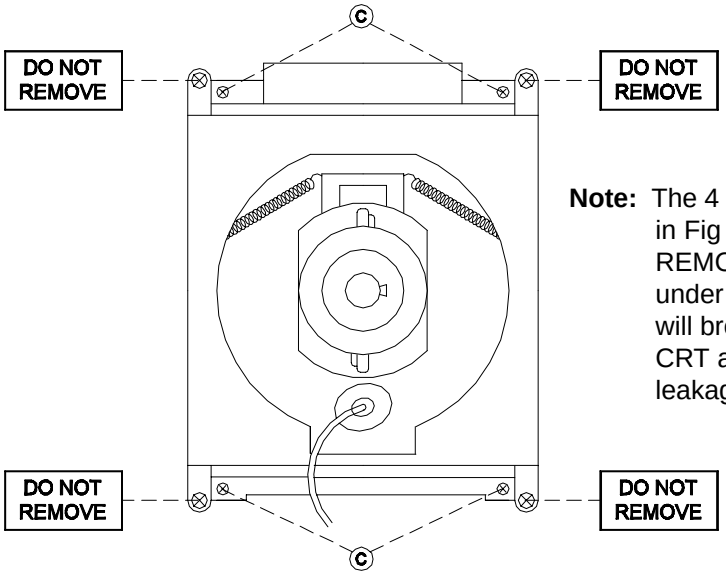

Note: The 4 spring-loaded screws shown in Fig 5-2 and labeled as "DO NOT REMOVE", should not be loosened under any circumstance. Doing so will break the seal between the CRT and the CRT-Spacer, causing leakage of the CRT Coolant.

Figure 5-2

2. Installation of the CRT

Note: The replacement CRT is supplied as an assembly comprised of the CRT and the Inner Lens with the space between them filled with ethylene glycol. Care should be taken during handling and installation to prevent shock from disrupting the seal or alignment between the CRT and Inner Lens. [Figure 5-3]

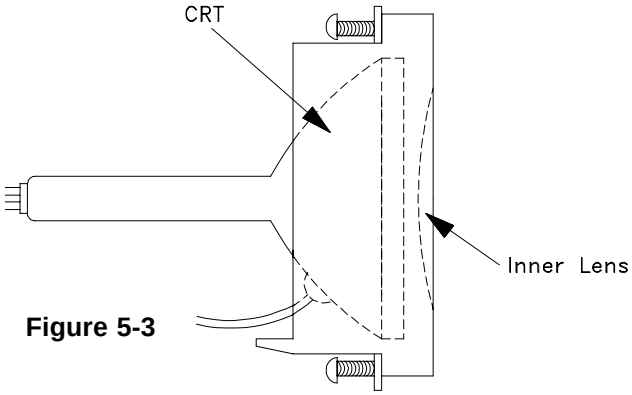

Figure 5-3

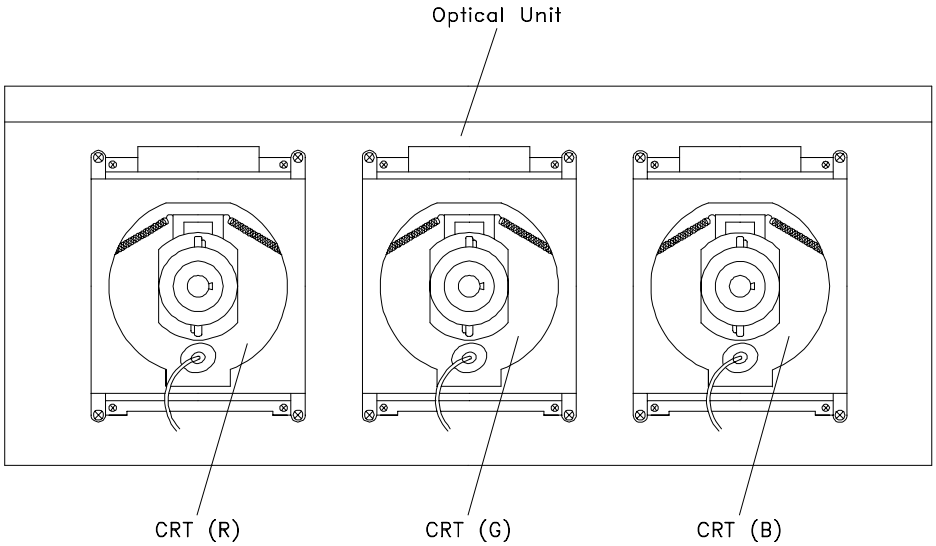

Figure 5-4

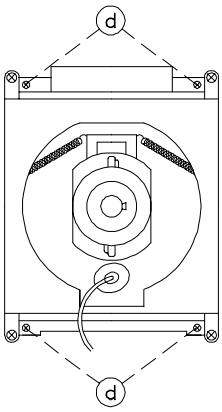

Figure 5-5

1. Carefully position the replacement CRT and fasten in place using 4 screws "d". [Figure 5-5]
2. Install the Deflection Yoke on the CRT neck. [Figure 5-6]
3. Install the Lens that was removed in steps 5 and 6 of Removal Of The CRT. [Figures 5-1 and 5-2]
   a) Position the Lens so that the Label faces the direction shown in Figure 5-7
   b) Install the mounting screws. [Figure 5-1]
4. Install the PCB-CRT.
5. Insert the Optical Unit into the Light Box Assembly.
6. Insert the Anode Lead Wire into the Flyback Transformer.
7. Re-clamp the Lead Wire in its original position.

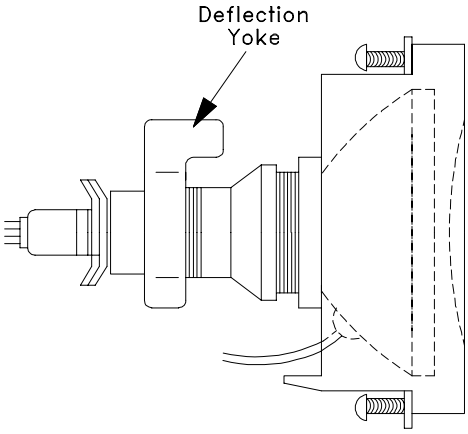

Figure 5-6

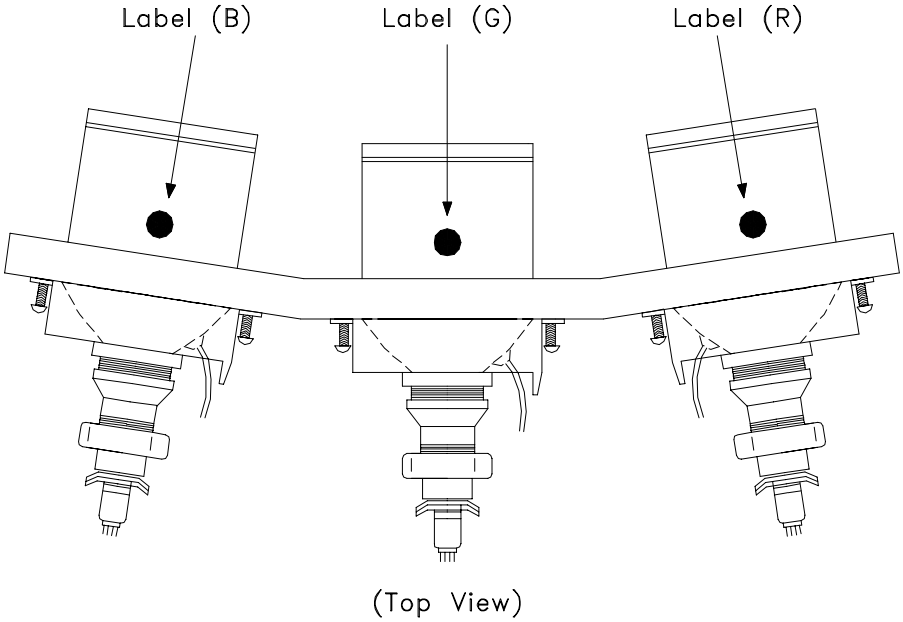

Figure 5-7

Adjustment procedures after replacing the CRT(s)

- CRT Cut Off / White Balance Adjustment
- Static Convergence Adjustment
- Dynamic Convergence Adjustment

ELECTRICAL ADJUSTMENTS

Note: Perform only the adjustments required.
Do not attempt an alignment if proper equipment is not available.

1. Test Equipment

- Oscilloscope (Unless otherwise specified, use 10:1 probes)
- Signal Generator (both SD and HD capable)
- Frequency Counter
- Direct Current Voltmeter
  Direct Current Power Supply
- Multiplex Audio Signal Generator
- Direct Current Ampere Meter

2. Test Signal

A. Monoscope Signal

Note: If you do not have a monoscope signal source, connect the unit to a VCR and play a Monoscope *alignment tape.
(* Part Number: 859C568060)

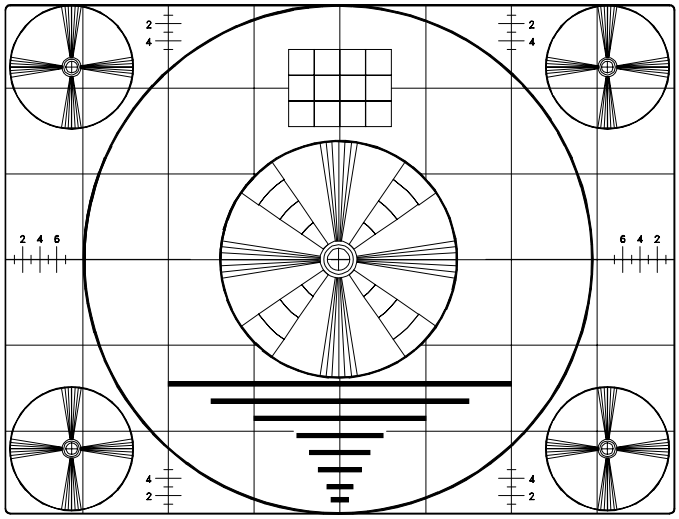

Monoscope Signal

B. Color Bar Signal

Use the color bar signal shown below, unless otherwise specified in this manual.

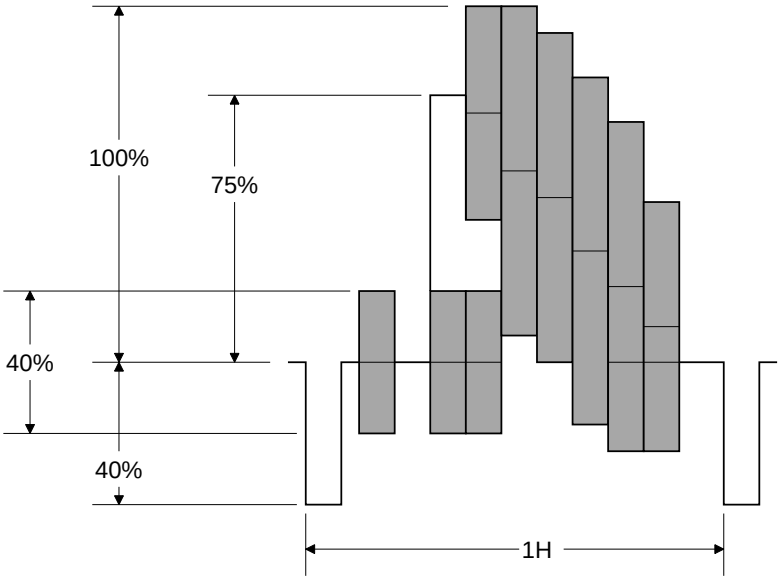

Split-Field Color Bars (100% window)

3. Initial Setup

A. Option Menu Setup

Follow the steps below for the initial set-up:

1. Select the "MENU" display by pressing the "MENU" button once.
2. Press the number buttons "2", "2", "7", "0" in sequence to select the "OPTION MENU" display.
3. Press the "ADJUST" button to select "INITIAL."
4. Press "ENTER."

NOTE: At this time channel 3 is automatically selected.

MENU-2-2-7-0

OPTION MENU	
Initial	
Power Restore	:OFF
DTV Port	:Auto
Direct Key Mode	:OFF

B. Default Settings

MAIN MENU DEFAULT SETTINGS

SETUP	
Memorize channels	ANT-A - Air
Language (idioma)	English
Front Button Lock	Off
CLOCK	
Clock Setting	Auto
Time Zone	Eastern
Daylight Savings Time	Applies
Clock Time	N/A
Set Day	N/A
CAPTIONS	
Closed Captions	On if Mute
CC Background	Gray
CHANNEL EDIT	
Antenna	ANT-A
Channel	3
Memory	Deleted
Name	N/A
SQV	N/A
V-CHIP-LOCK	
V-Chip	Off
TV Rating	TV-PG
FV- Fantasy Violence	Allow
D-Sexual Dialog	Allow
L-Adult Language	Allow
S-Sexual Situations	Allow
V-Violence	Allow

Programs Not Rated	Allow
Movie Rating	PG
V-CHIP LOCK By Time	
V-Chip Start Time	12:00AM
V-Chip Stop Time	12:00AM
Lock by Time	Off
Lock Time	N/A
Unlock Time	N/A
ADVANCED FEATURES	
Video Mute	On
Black Enhancement	On
TIMER	
Timer	Off
Set Time	12:00PM
Set Day	Everyday
Device	Ant-A
Channel	3
COLOR BALANCE	
Auto Color Correction	Off
MANUAL COLOR ADJUST.	
Magenta	0.5
Red	0.5
Yellow	0.5
Green	0.5
Cyan	0.5
Blue	0.5

AUDIO/VIDEO	
A/V Memory Reset	Ant-A
TV Speakers (Internal)	On
Audio Output	Variable
AUDIO SETTINGS	
TV Bass	0.5
TV Treble	0.5
TV Balance	0.5
TV Surround	Off
TV Listen To	Stereo
TV Level Sound	Off
VIDEO SETTINGS	
TV Contrast	1
TV Brightness	0.5
TV Sharpness	0.5
TV Color	0.5
TV Tint	0.5
TV Color Temp	High
TV Video Noise	Standard
TV Film Mode (Auto)	Off
TV VSM Sharpness	On
TV Volume	0.3
PIP Source	Ant-A Ch 3
PIP Position	Lower Right
POP Position	Right Half
Format	Stretch
PIP/POP Format	Side by Side

Items in the table below are set to following after Initalization.

AV Memory Initial Settings

A/V Memory	Ant-A Ant-B	DTV	NTSC 1/2/3	COMP. 1/2
Contrast	Max	Max	Max	Max
Brightness	Mid	Mid	Mid	Mid
Sharpness	Mid	Mid	Mid	Mid
Color	Mid	Mid	Mid	Mid
Tint	Mid	Mid	Mid	Mid
Color Temp.	High	High	High	High
Video Noise	Stnd.	Stnd.	Stnd.	Stnd.
Image type	Video	Video	Video	Video
TV VSM Sharpness	On	On	On	On
Bass	Mid	Mid	Mid	Mid
Treble	Mid	Mid	Mid	Mid
Balance	Mid	Mid	Mid	Mid
Surround	Off	Off	Off	Off
Listen To	Stereo	N/A	N/A	N/A
Level Sound	Off	Off	Off	Off

4. LED Indicator Diagnostics

The “Power ON LED” provides an indication of the sets operation, and the possible cause of a malfunction.

A. Initial Control Circuitry Check

Immediately after the TV is connected to an AC power source:

- The LED flashes three times ... indicating the Microprocessor has initialized and is functioning properly.
- If the LED does not flash ... the Microprocessor is NOT functioning.

B. Error Code Operational Check

Pressing the front panel “INPUT” and “MENU” buttons at the same time, and holding for 5 seconds, activates the Error Code Mode. The LED flashes denoting a two digit Error Code, or indicating no problem has occured since the last Initalization.

Note: The front panel buttons must be used, NOT those on the Remote Control.

- The number of flashes indicates the value of the MSD (tens digit) of the Error Code.
- The flashing then pauses for approximately 1/2 second.
- The LED then flashes indicating the value of the LSD (ones digit) of the Error Code.
- The Error Code is repeated a total of 5 times.

  Example: If the Error Code is “24”, the LED will flash two times, pause, and then flash four times.

C. Error Codes

The Error Code designations indicating a malfunction, or no malfunction, are listed below:

Error Code	Description
12	No error has occurred.
21	X-Ray Protect circuit.
22	Short Protect circuit.
23	Horizontal Deflection failure.
24	Vertical Deflection failure.

5. Circuit Adjustment Mode

Except for the following, all adjustment items must be performed using the remote hand unit.

- Lens Focus
- Electrostatic Focus

A. Activating the Circuit Adjustment Mode

1. Press the "MENU" button on a remote hand unit.

2. Press the number buttons "2", "2", "5", "7" in sequence. The screen will change to the Adjustment Mode.

Note: Repeat steps 1 and 2 if the circuit adjustment mode display does not appear on screen

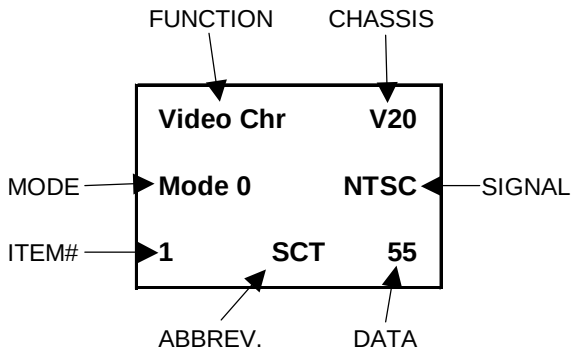

B. Selection of adjustment Functions and Adjustment Items

To select an adjustment item in the circuit adjustment mode, first select the adjustment function that includes the specific adjustment item to be selected. Then, select the adjustment item.

Refer to the following pages for the listing of adjustment functions and adjustment items.

1. Press the "AUDIO" button on a remote hand unit to select an adjustment function. Each time the button is pressed, the Function changes in the following sequence:

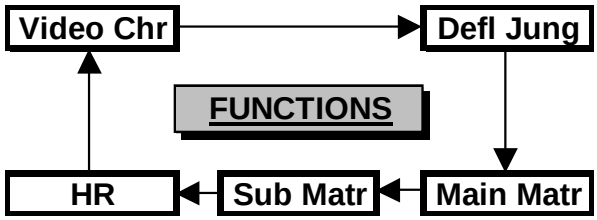

2. Press the “VIDEO” button to select a specific Adjustment Item. The Item number increases each time the “VIDEO” button is pressed.

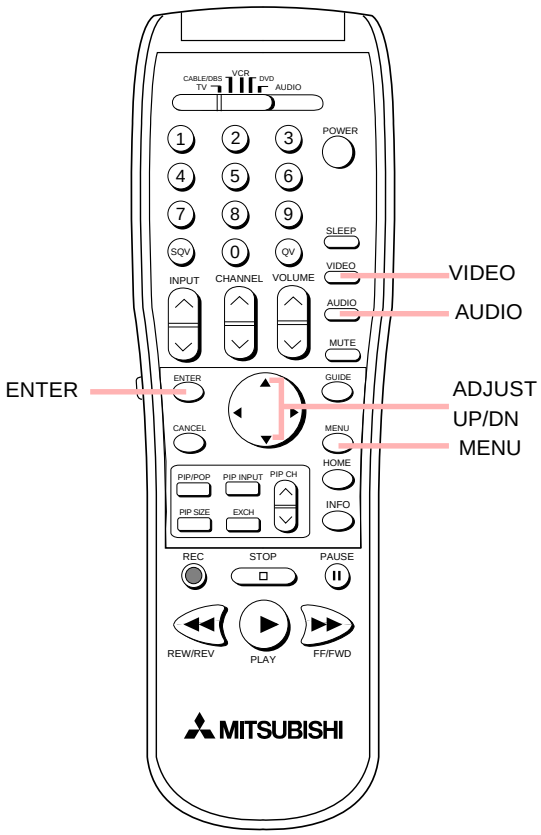

C. Changing Data

After selecting an adjustment Item, use the “ADJUST UP/DOWN” button to change data.

- Press “ADJUST DOWN” to decrease the data value.
- Press “ADJUST UP” to increase the data value.

D. Saving Adjustment Data

Press “ENTER” to save adjustment data in memory. The character display turns red for approximately one second in this step.

Note: If the circuit adjustment mode is terminated without pressing “ENTER”, changes in adjustment data are not saved.

E. Terminating the Circuit Adjustment Mode

Press the “MENU” button on the remote hand unit twice to terminate the adjustment mode.

Note: The circuit adjustment mode can also be terminated by turning power OFF.

6. Convergence Adjustment Mode

The Convergence mode is used to perform raster geometry correction, and convergence adjustments as specified in Adjustment Procedures 15 through 18.

A. Convergence Mode Activation

1. Press MENU-2-2-5-9
2. When the Convergence Mode is activated, the display at the right appears on a Green Crosshatch.

SD	**Coarse BLUE**	
1	**HSTA**	**-50**

Coarse Conv. Display

B. Selecting the HD or SD Mode

1. **Select the Signal Source** before entering the Convergence Mode, either an NTSC or HD source.
2. **Enter the Convergence Mode** (MENU-2-2-5-9)
   - If the signal source is NTSC, the SD mode is activated.
   - If the signal source is HD 1080i, the HD mode is activated.
3. **Activating the HD mode when no HD signal is available.**
   - Activate the Factory Option Menu (MENU-2-2-7-0)
   - Use the “Adjust” keys to select “DTV Port” and press “Enter” to change the setting to “1080i”. Sequence = “Auto”-”480i”-480-p”-”1080i”. **Ignore any loss of sync while changing modes.**
   - Exit the Option Menu (Press “MENU” twice).
   - Select the DTV Inputs as the signal source (INPUT button).
   - Activate the Convergence Mode ... the Convergence mode will be in the HD mode and the internal crosshatch is displayed.
4. **After adjusting Convergence, be sure to set the DTV Port back to AUTO.**
   - Select an analog input as the signal source (INPUT button).
   - Activate the Option Menu (MENU-2-2-7-0).
   - Use the “Adjust” keys to select “DTV Port and press “Enter” to change the setting from “1080i” to “AUTO”.
   - Exit the Option Menu (Press MENU twice).

C. Convergence Mode Functions

In the Convergence Mode there are three main Functions (Categories).

- Pressing “6” activates CONV MISC
- Pressing “5” activates COARSE CONV
- Pressing “4” activates FINE CONV

D. CONV MISC (Press 6)

This mode is used to preset data values controlling the Convergence Generator, and to perform the HV Regulation adjustment.

1. Use the VIDEO button to select an item.
2. Use the ADJUST buttons to change data.

Note: When Item “1 HVOL” is selected the screen goes black except for the data display. This occurs since a black screen is required when making the HV Regulation adjustment.

E. COARSE CONV (Press 5)

There are four Sub Functions in the Coarse mode, COARSE GREEN, COARSE RED, COARSE BLUE and DF.

- COARSE GREEN .... used to make Coarse Raster Geometry Adjustments.
- COARSE RED ... used to make Coarse Red Convergence Adjustments.
- COARSE BLUE ... used to make Coarse Blue Convergence Adjustments.
- DF ... used to preset data values controlling the Dynamic Beam Focus circuit drive signal.

1. Use AUDIO button to select a Sub Function
2. Use the VIDEO button to select an Adjustment Item.
3. Use the ADJUST buttons to change data.

F. FINE CONV (Press 4)

Sub Functions

This mode is used to perform Fine Raster Correction, and Fine Red and Blue Convergence Adjustments. There are three Sub Adjustment Functions, selected with the AUDIO button:

- FINE GREEN .... a Green Crosshatch is displayed, for Fine Raster Corrections.
- FINE RED .... a White Crosshatch is displayed, for Fine Red Convergence Adjustments.
- FINE BLUE .... a White Crosshatch is displayed, for Fine Blue Convergence Adjustments.

Cursor

In the Fine mode a Cursor is added to the Crosshatch. The ENTER button toggles the Cursor between two modes:

- MOVE (blinking Cursor) .... use the ADJUST buttons to select any of 64 points on the Crosshatch.
- ADJUST (Non blinking Cursor) .... the ADJUST buttons adjust the active color at the current Cursor position, horizontally or vertically.

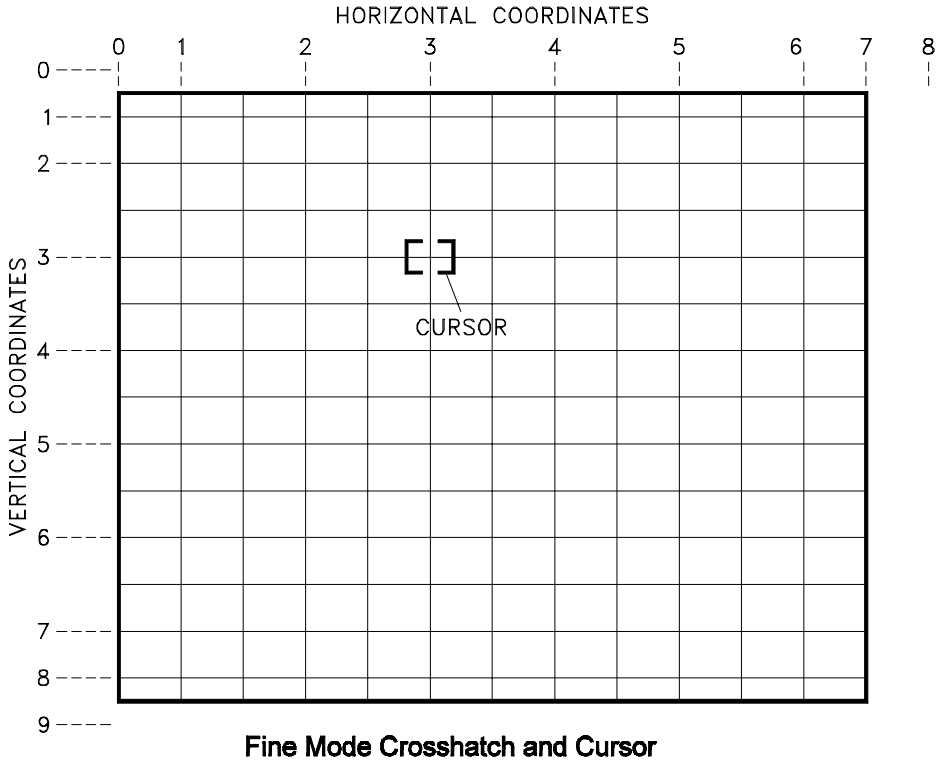

Fine Mode Crosshatch and Cursor

Cursor Coordinates

Specific intersections in the Crosshatch are assigned vertical and horizontal coordinates. These are shown in the preceeding diagram. The Cursor can only be moved to those positions that have coordinates assigned. If the Cursor is at coordinates outside the screen area, the Cursor will not be visible. Use the ADJUST buttons to move the Cursor to an intersection on the screen.

Display

The on-screen display changes in the Fine mode, as shown below. The display shows the vertical and horizontal data for the current Cursor Position, and the horizontal and vertical coordinates for that position.

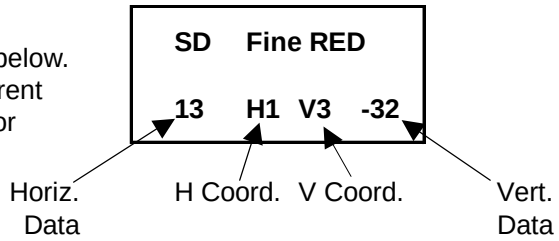

F. Saving Data and Exiting the Convergence Mode

Press MENU twice to exit the Convergence mode, data is automatically saved.

Note: If power is interrupted prior to properly exiting the Convergence Mode, changes in adjustment data will not be saved.

ADJUSTMENT ITEMS LIST

Video Chroma Function **Menu-2-2-5-7**

Item#	Abbrev.	Description	Data				Adjustment
			Range	480i	480p	1080i	
1	SCT	Picture Gain control	0~63	42	42	42	Sub Contrast
2	SBRT	Sub Brightness	0~63	20	20	20	Black Level
3	SCON	Sub Contrast	0~15	7	7	7	Preset
4	RDRH	R Drive (H temp)	0~63	31	31	31	White Balance
5	GDRH	G Drive (H temp)	0~63	41	41	41	Preset
6	BDRH	B Drive (H temp)	0~63	31	31	31	White Balance
7	CTRH	R Cutoff (H temp)	0~63	31	31	31	"
8	CTGH	G Cutoff (H temp)	0~63	31	31	31	Preset
9	CTBH	B Cutoff (H temp)	0~63	31	31	31	White Balance
10	RDRL	R Drive (L temp)	0~63	31	31	31	"
11	GDRL	G Drive (L temp)	0~63	41	41	41	Preset
12	BDRL	B Drive (L temp)	0~63	31	31	31	White Balance
13	CTRL	R Cutoff (L temp)	0~63	31	31	31	"
14	CTGL	G Cutoff (L temp)	0~63	31	31	31	Preset
15	CTBL	B Cutoff (L temp)	0~63	31	31	31	White Balance
16	GMMA	RGB Gamma Correction	0~3	2	2	2	Preset
17	GAML	Gamma Differential Corr. Switch	0~1	0	0	0	"
18	BRT	Brightness	0~63	31	31	31	"
19	COL	Color	0~63	31	29	35	White Balance
20	TINT	Tint	0~63	28	31	31	Preset
21	SHRP	Sharpness	0~63	31	31	31	"
22	CBOF	Cb DC Offset	0~63	31	31	31	"
23	CROF	Cr DC Offset	0~63	31	31	31	"
31	VMLE	VM Output Level	0~3	1	2	2	"
40	AGIW	White output aging mode switch	0~1	0	0	0	"
55	ABLT	Threshold Adjust for ABL input	0~15	4*	4*	4*	"

* 0 for models WS-65311, WS-55411, VS-50111, VS-60111 and WS-73411,

Deflection Jungle **Menu-2-2-5-7**

Item#	Abbrev.	Description	Range	48"		50"/60"		55"		65"		73"	
				HD	NTSC	HD	NTSC	HD	NTSC	HD	NTSC	HD	NTSC
1	HWID	Width	0~63	31	31	31	31	29	31	29	31	31	31
2	HKEY	Horiz. Keystone	0~63	31	31	31	31	25	24	31	24	31	31
3	EWPT	Top EW-PCC	0~63	31	31	31	31	31	31	31	31	31	31
7	VHGT	Height	0~63	28	40	30	37	17	15	44	40	28	40
8	VLIN	Vert. Linearity	0~15	5	5	5	5	5	5	7	7	5	5
9	VSCN	Vert. S Corr.	0~15	0	0	0	0	0	0	0	0	0	0
18	VPOS	Vert. Position	0~63	31	31	31	31	31	31	31	31	31	31

MAIN MATRIX **MENU-2-2-5-7**

Item#	Abbrev.	Description	Data	
			Range	Initial
1	TNTM	Main Tint Control	0~63	28
2	COLM	Main Color Control	0~63	19
3	YDRM	Main Y Gain	0~63	12

SUB MATRIX **MENU-2-2-5-7**

Item#	Abbrev.	Description	Data	
			Range	Initial
1	TNTS	Main Tint Control	0~63	28
2	COLS	Main Color Control	0~63	30
3	YDRS	Main Y Gain	0~63	12
4	VPDS	U signal DC Control	0~15	7
5	UPDS	V signal DC Control	0~15	7

HR **MENU-2-2-5-7**

Item#	Abbrev.	Description	Initial
1	HR	NTSC Disp.Pos.	29
2	HRHD	HD Disp. Position	15

CONVERGENCE MODE ITEMS

CONV MISC. **MENU-2-2-5-9-6**

Item#	Abbrev.	Description	Data		
			Range	SD	HD
1	HVOL	HV Adjust	0~352	150	150
2	VCNT	V-saw amplitude	0~127	29	29
3	VSTR	V-saw start timee	0~127	0	10
4	VOFS	V-saw offset	0~127	10	8
5	STLN	Start line	0~127	38	26
6	FPHS	Fine phase	0~352	296	288
7	CPHS	Coarse phase	0~31	15	15
8	HOFS	H-saw offset	0~127	22	22
9	DPHS	DF coarse horiz phase	0~31	1	1
10	DOFS	DF offset	0~127	34	34
11	TPHS	Test Pattern phase	0~352	39	31
12	TPVD	Test Pattern Vert. Position	0~127	22	39
13	ODEV	Odd/Even detection	0~352	200	125
14	HRTC	H-saw retrace	0~3	1	1
15	DRTC	DF retrace	0~3	1	1
16	DAC	External DAC selection	0~1	1	1
17	EPWP	EEPROM write protection	0~1	0	0

COARSE CONV GREEN (MENU-2-2-5-9-5)

#	Abbrev.	Description	WS-48311		VS-50111		WS-55311		WS-55411		VS-60111		WS-65311		WS-65411		WS-73411	
			SD	HD	SD	HD	SD	HD	SD	HD	SD	HD	SD	HD	SD	HD	SD	HD
1	HSTA	Horiz. Position	0	0	0	0	0	0	0	0	0	0	0	0	0	0	0	0
2	VSTA	Vert. Position	0	0	0	0	0	0	0	0	0	0	0	0	0	0	0	0
3	SKEW	Skew (Y axis)	0	0	0	0	0	0	0	0	0	0	0	0	0	0	0	0
4	TILT	Tilt (X axis)	5	0	0	0	0	0	0	0	0	0	0	0	0	0	0	0
5	HWID	Width	0	10	5	5	20	20	0	0	5	5	0	0	0	0	0	0
6	HLIN	Horiz. Linearity	0	0	15	15	0	0	10	10	15	15	10	10	10	10	10	10
7	SPCC	Side PC Corr.	0	0	0	0	0	0	0	0	0	0	0	0	0	0	0	0
8	HKEY	Horiz. Keystone	0	17	0	0	0	17	10	10	0	0	0	0	0	0	0	0
9	TBPC	Top/Bottom PC	-200	-169	-150	-150	-180	-190	-200	-190	-150	-150	-200	-170	-200	-170	-200	-180
10	VKEY	Vert. Keystone	0	14	0	20	0	10	15	10	0	20	15	10	15	10	15	10
11	VWID	Height	11	17	40	30	20	30	30	30	40	30	30	30	30	30	30	30
12	VLIN	Vert. Linearity	0	0	0	0	0	0	0	0	0	0	0	0	0	0	0	0

COARSE CONV RED (MENU-2-2-5-9-5)

#	Abbrev.	Description	WS-48311		VS-50111		WS-55311		WS-55411		VS-60111		WS-65311		WS-65411		WS-73411	
			SD	HD	SD	HD	SD	HD	SD	HD	SD	HD	SD	HD	SD	HD	SD	HD
1	HSTA	Horiz. Position	50	50	50	50	50	50	50	50	50	50	50	50	50	50	50	50
2	VSTA	Vert. Position	0	0	0	0	0	0	0	0	0	0	0	0	0	0	0	0
3	SKEW	Skew (Y axis)	0	0	0	0	0	0	0	0	0	0	0	0	0	0	0	0
4	TILT	Tilt (X axis)	0	0	0	0	0	0	0	0	0	0	0	0	0	0	0	0
5	HLIN	Horiz. Linearity	-195	-170	-140	-125	-150	-170	-180	-170	-140	-125	-150	-150	-150	-150	-220	-190
6	HWID	Width	22	30	5	0	0	0	0	0	5	0	0	0	0	0	0	0
7	VKEY	Vert. Keystone	-100	-85	15	-87	-70	-90	-100	-95	15	-87	-90	-70	-90	-70	-100	-110
8	VWID	Height	0	16	0	0	0	0	0	0	0	0	0	0	0	0	0	0
9	VLIN	Vert. Linearity	0	0	0	0	20	20	0	0	0	0	0	0	0	0	0	0
10	TBPC	Top/Bottom PC	-200	-169	-150	-150	20	20	20	20	-150	-150	20	20	20	20	20	20
11	SDBW	Side Bow	0	0	0	0	30	30	30	30	0	0	30	30	30	30	30	30

COARSE CONV BLUE (MENU-2-2-5-9-5)

#	Abbrev.	Description	WS-48311		VS-50111		WS-55311		WS-55411		VS-60111		WS-65311		WS-65411		WS-73411	
			SD	HD	SD	HD	SD	HD	SD	HD	SD	HD	SD	HD	SD	HD	SD	HD
1	HSTA	Horiz. Position	-50	-50	-50	-50	-50	-50	-50	-50	-50	-50	-50	-50	-50	-50	-50	-50
2	VSTA	Vert. Position	0	0	0	0	0	0	0	0	0	0	0	0	0	0	0	0
3	SKEW	Skew (Y axis)	0	0	0	10	0	0	0	0	0	10	0	0	0	0	0	0
4	TILT	Tilt (X axis)	0	0	0	0	0	0	0	0	0	0	0	0	0	0	0	0
5	HLIN	Horiz. Linearity	190	165	150	160	160	175	175	170	150	160	160	150	160	150	230	200
6	HWID	Width	-14	-25	-20	-30	0	0	0	0	-20	-30	0	0	0	0	0	0
7	VKEY	Vert. Keystone	100	90	75	75	75	80	70	75	75	75	90	65	90	65	80	90
8	VWID	Height	0	0	-20	-20	0	0	0	0	-20	-20	0	0	0	0	0	0
9	VLIN	Vert. Linearity	0	0	0	0	0	0	0	0	0	0	0	0	0	0	0	0
10	TBPC	Top/Bottom PC	0	0	0	0	0	20	0	0	0	0	0	0	0	0	0	0
11	SDBW	Side Bow	0	0	0	0	-30	-30	-30	-30	0	0	-30	-30	-30	-30	-30	-30

DF (MENU-2-2-5-9-5)

Item	Abbr.	48/55/65/73 Inch	50/60 Inch
0	DFH	-220	-220
1	DFV	-100	-140

Adjustment Test Point Location

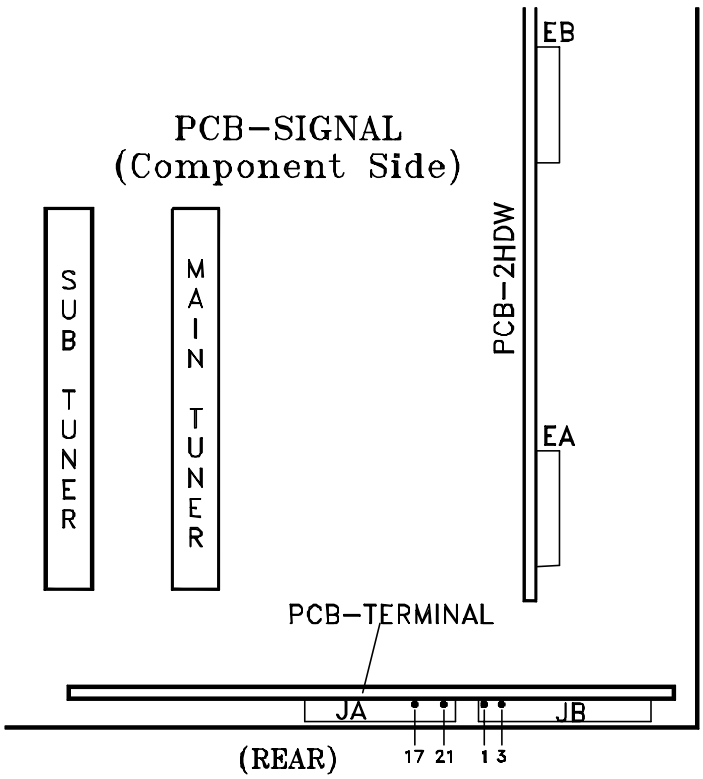

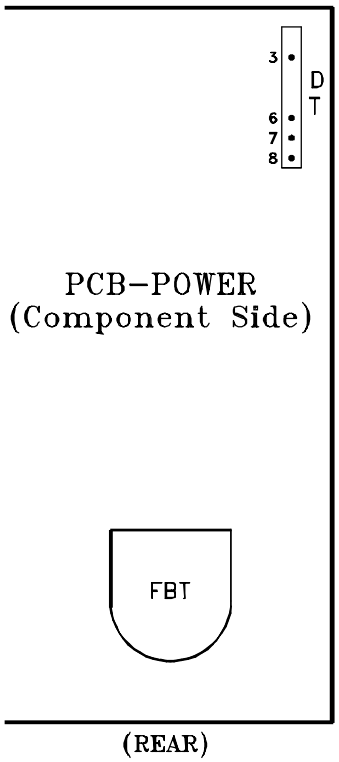

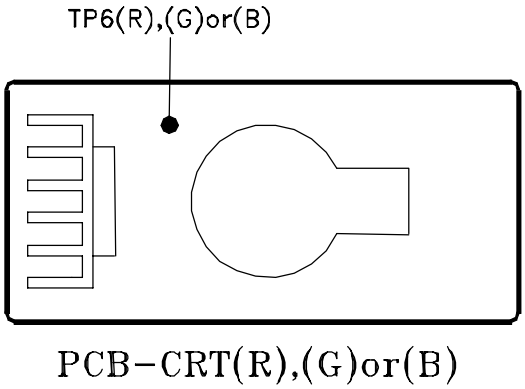

Test Points

DT pin 3 - HV Adjust
DT pin 6 - Ground
DT pin 7 - 12 Volts
DT pin 8 - ACL
JA pin 17 - Main Picture (Y)
JA pin 21 - Main Color (Pr)
JB pin 1 - Sub Picture (Y)
JB pin 3 - Sub Picture (Cr)
TP6(R, G or B) - CRT Cathode

[HV Circuit]

1. HV Regulation

Purpose: To set the CRT Anode voltage.

Symptom: Dark Picture

Measuring Instrument	DC Voltmeter
Test Point	DT connector pins 3 & 6
Ext. Trigger	------
Measuring Range	-------
Input Signal	Video Signal Monoscope
Input Terminal	Video Input

Note: *This adjustment must be rechecked following Adjustment 9 CRT Cutoff.*

1. Supply a video monoscope signal.
2. Set Contrast to maximum, and Brightness to mid position.
3. Connect a DC volt meter between pins 3 and 6 of the DT connector. (Positive lead to pin 3)
4. Activate the Conv-Misc Mode.
5. Select Item “1 HVOL” (screen goes black).
6. Adjust Item “1 HVOL” for 15.4V ±0.05V on the meter.
7. Save data and exit the Conv-Misc mode.
8. Confirm that the voltage does not change more than 0.15V.

Note: *This adjustment must be performed if E2RESET or Convergence E2RESET are activated.*

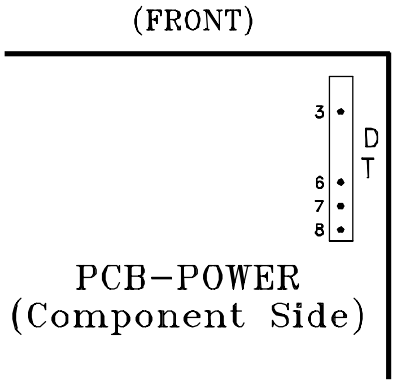

CONVERGENCE MODE

Activate ……..MENU-2-2-5-9
Misc. ……."6"
Coarse……..…."5"
Fine ……..."4"
Color (R,G or B)……AUDIO
Item No……VIDEO
Adjust/Move…….ADJUST
Cursor Toggle……ENTER
Save & Exit…..MENU (twice)

[Video Circuit]

2. Main/Sub Y Level

Purpose To set picture luminance

Symptom: Excess or insufficient brightness.

Measuring Instrument	Oscilloscope
Test Point	JA Connector pin 17 JB Connector pin 1
Ext. Trigger	------
Measuring Range	------ Color Bars
Input Signal	
Input Terminal	Video Input

1. Supply a color bar signal to a Video Input (not an RF input).
2. Select the color bar signal for both the main and sub pictures.
3. Connect the oscilloscope to connector JA pin 17 (Main-Y).
4. Activate the Adjustment Mode
5. Select Item “3 YDRM” in the Main Matrix function.
6. Adjust the data so the Main-Y signal is between 0.71 Vp-p max. and 0.66 Vp-p min. at JA pin 17.
   (If it cannot be adjusted within this range, set to the lower value)
7. Move the oscilloscope to connector JB pin 1 (Sub-Y).
8. Select Item “3 YDRS” in the Sub Matrix function.
9. Adjust the data to equal the MAIN-Y Gain (+0.0V -0.1V).

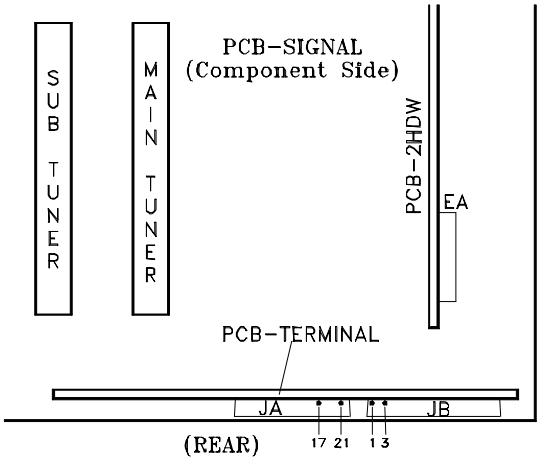

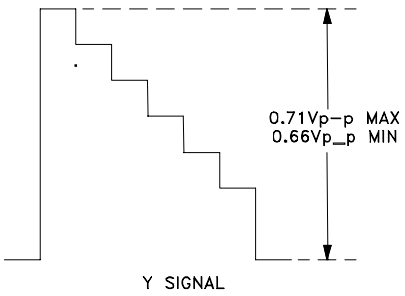

CIRCUIT ADJUST MODE

Activate …….. MENU-2-2-5-7
Function ……..……..AUDIO
Item No. ……VIDEO
Adjust Data ……..ADJUST
Save Data …. ……ENTER
Exit ……..MENU (twice)

[Video Circuit]

3. Main/Sub Color Level

Purpose: To match the sub picture color to that of the main picture.

Symptom: Main and sub pictures colors differ.

Measuring Instrument	Oscilloscope
Test Point	JA pin 21 JB pin 3
Ext. Trigger	------
Measuring Range	------
Input Signal	Color Bars
Input Terminal	Video

1. Supply an NTSC signal to an External Video Input.
2. Select the NTSC signal as the source for both the main and sub pictures.
3. Connect an oscilloscope to connector JA pin 21 (Main PR).
4. Activate the Adjustment mode.
5. Select Item “2 COLM” in the Main Matrix Function.
6. Adjust data so the PR signal is 0.71 Vp-p max. - 0.66 Vp-p min
   (If it cannot be adjusted within this range, set to the lower value)
7. Connect an oscilloscope to connector JB pin 3 (Sub PR).
8. Select item “2 COLS” in the Sub Matrix Function.
9. Adjust so Sub PR = Main PR.

CIRCUIT ADJUST MODE

Activate …….. MENU-2-2-5-7
Function ……..AUDIO
Item No. ……VIDEO
Adjust Data ……..ADJUST
Save Data …. ……ENTER
Exit ……..MENU (twice)

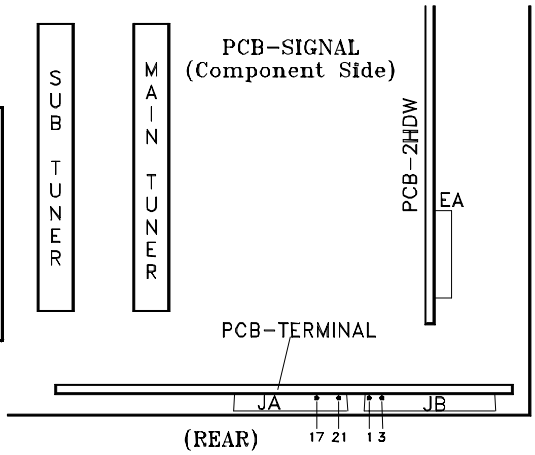

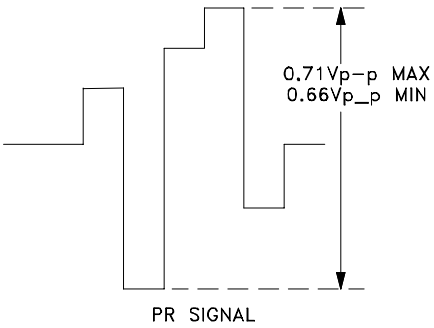

[CRT Circuit]

4. CRT Cutoff

Purpose To set the cutoff point for all three CRTs.

Symptom: Monochrome has a color tint, or incorrect brightness.

Measuring Instrument	Oscilloscope
Test Point	TP6R, TP6G, TP6B
Ext. Trigger	------
Measuring Range	50V/Div. 2msec/Div.
Input Signal	None
Input Terminal	Video Input

Note: ***Use the Expand mode (full screen)***

1. Select an External Input with no signal.
2. Enter the Adjustment Mode, Video Chroma Function.
3. Press “1”, automatically blanks the screen and sets COL to 0.
4. Set the data to the values given in the table below.
5. Connect the oscilloscope to TP6R.
6. Adjust the Red Screen VR so the black level is 170V, as shown below, or 198.5V ±1VDC using an DC Voltmeter.
7. Repeat Steps 4 and 5 to set the Blue and Green Screen VRs, using TP6G and TP6B.

Note: *White Balance must be performed after this adjustment.*

CIRCUIT ADJUST MODE

Activate …….. MENU-2-2-5-7
Function ……..AUDIO
Item No. ……VIDEO
Adjust Data ……..ADJUST
Save Data …. ……ENTER
Exit ……..MENU (twice)

Cutoff Preset VC Data

Item	Abbr	Data
1	SCT	42
2	SBRT	20
3	SCON	7
4	RDRH	31
5	GDRH	41
6	BDRH	31
7	CTRH	31
8	CTGH	31
9	CTBH	31

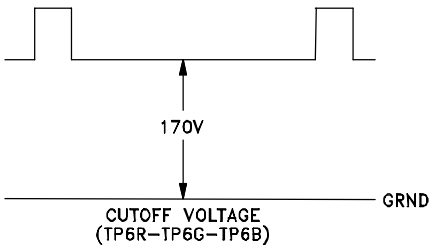

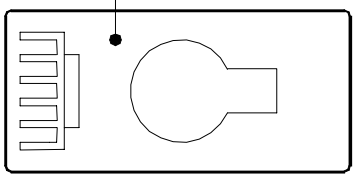

PCB-CRT(R),(G)or(B)

[CRT Circuit]

5. White Balance (NTSC)

Purpose: To set the CRTs white level in the NTSC mode.

Symptom: Monochrome has a color tint.

Measuring Instrument	DC Voltmeter
Test Point	------
Ext. Trigger	------
Measuring Range	------
Input Signal	NTSC White Raster
Input Terminal	RF or Video

Note: ***Use the "FORMAT" button to activate the Expand mode (full screen).***

1. Supply a full White Raster Signal
2. Activate the Service Mode, Video Chroma Function.
3. Set the data for Item "19 COL" to 0.
4. Adjust Items "4 RDRH" and "6 BDRH" for optimum white at the center of the screen.
5. Reduce the input luminance level to 25%.
6. Adjust Items "7 CTRH" and "9 CTBH" for optimum white.
7. Insert a Milliammeter in series with each CRT Cathode. The maximum allowable current for each CRT is given in the table below.
8. Set the white raster to 100% and adjust Items "10 RDRL" and "12 BDRL" for optimum white at the center of the screen.
9. Reduce the luminance level to 25%.
10. Adjust Item "13 CTRL" and "15 CTBL" for optimum white.
11. Set the data for Item "19 COL" back to 31.

CIRCUIT ADJUST MODE

Activate …….. MENU-2-2-5-7
Function ……..AUDIO
Item No. ……VIDEO
Adjust Data ……..ADJUST
Save Data …. ……ENTER
Exit ……..MENU (twice)

Maximum CRT Current

CRT	ALL BUT 73" CURRENT	73" CURRENT
RED	580 uA	900 uA
GREEN	580 uA	900 uA
BLUE	580 uA	900 uA

[CRT Circuit]

6. White Balance (HD)

Purpose To set the CRTs white level in the HD mode.

Symptom: Monchrome pictures have a color tint.

Measuring Instrument	-----
Test Point	-----
Ext. Trigger	------
Measuring Range	-----
Input Signal	HD White Raster
Input Terminal	DTV Inputs

1. Supply an HD Full White Raster signal to the DTV Inputs.
2. Select the DTV Inputs (Input button)
3. Activate the Adjustment mode, Video Chroma Function.
4. Set Item "19 COL" to 0.
5. Adjust Items "4 RDRH" and "6 BDRH" for optimum white at the center of the screen.
6. Reduce the input signal luminance to 25%.
7. Adjust Items "7 CTRH" and "9 CTBH" for optimum white.
8. Set the white raster to 100% and adjust Items "10 RDRL" and "12 BDRL" for optimum white at the center of the screen.
9. Reduce the luminance level to 25%.
10. Adjust Item "13 CTRL" and "15 CTBL" for optimum white.
11. Set the data for Item "19 COL" back to 31.

CIRCUIT ADJUST MODE

Activate …….. MENU-2-2-5-7
Function ……..AUDIO
Item No. ……VIDEO
Adjust Data ……..ADJUST
Save Data …. ……ENTER
Exit ……..MENU (twice)

[Video Circuit]

7. Black Level

Purpose: To set the black level of the picture.

Symptom: Excess or insufficient brightness.

Measuring Instrument	-----
Test Point	-----
Ext. Trigger	------
Measuring Range	------
Input Signal	Monoscope
Input Terminal	Video Input

1. Supply a Monoscope signal to a Video Input.
2. Activate the Adjust Mode, Video Chroma Function.
3. Adjust Item “2 SBRT” so the 0% and 10% black levels on the gradation scale are the same.
4. Press ENTER to save data.
7. Exit the Service Mode.

CIRCUIT ADJUST MODE

Activate …….. MENU-2-2-5-7
Function ……..AUDIO
Item No. …….VIDEO
Adjust Data ……..ADJUST
Save Data …. ……ENTER
Exit ……..MENU (twice)

40%	30%	20%	10%
50%	0%	0%	0%
60%	70%	80%	90%

GRADATION SCALE

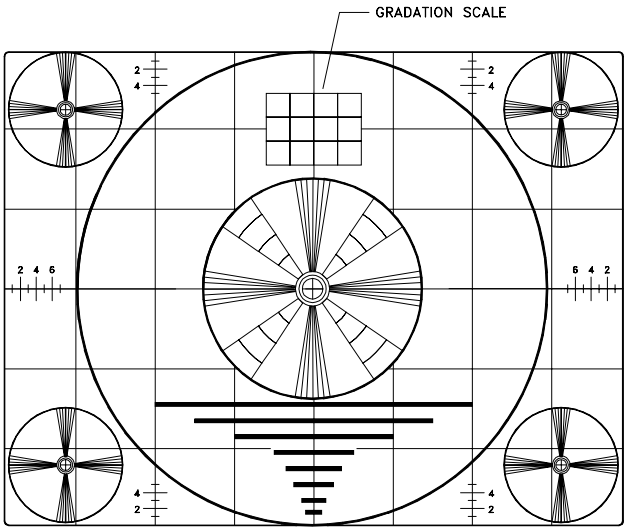

[Video Circuit]

8. Sub Contrast

Purpose To set overall beam current to its’ optimum level.

Symptom: Excess or insufficient contrast.

Measuring Instrument	DC ma meter
Test Point	DT connector pins 7 & 8
Ext. Trigger	------
Measuring Range	-----
Input Signal	Grayscale
Input Terminal	RF Input

Note: Activate the Expand mode (full screen).

1. Supply a Grayscale signal to a RF Input.
2. Activate the Adjust Mode, Video Chroma Function.
3. Select Item “1 SCT”, signal level automatically reduces.
4. Connect a 3ma DC meter between DT connector pins 7 and 8. Positive lead to pin 7.
5. Adjust Item “1 SCT” for 630µA ±10µA (690µa ±10µa on the WS-73411).
6. Remove the meter.
7. Save data and Exit the Service Mode.

CIRCUIT ADJUST MODE

Activate …….. MENU-2-2-5-7
Function ……..AUDIO
Item No. …….VIDEO
Adjust Data ……..ADJUST
Save Data …. ……ENTER
Exit ……..MENU (twice)

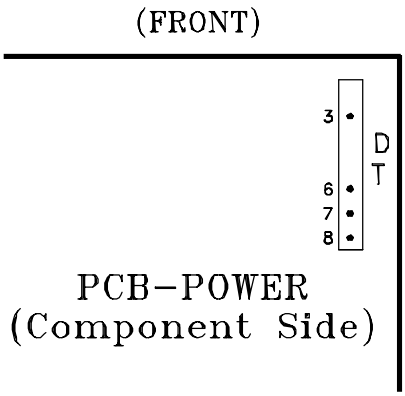

[Focus Circuit]

9. Dynamic Focus Preset

Purpose: To improve edge focus.

Symptom: Poor focus at the edges of the screen.

Measuring Instrument	-----
Test Point	-----
Ext. Trigger	------
Measuring Range	-----
Input Signal	Monoscope
Input Terminal	Video Input

1. Supply a Monoscope signal to a Video Input
2. Activate the Convergence Mode.
3. Select the DF Function under the Conv. Coarse Mode.
4. Set Items “0 DFH” and “1 DFV” to the data values given in the DF Table.
5. Press “6” to activate CONV-MISC
6. Set “0 FPHS” and “1 DPHS” to data values given in the CONV-MISC Table.
5. Exit the Conv. Mode.

CONVERGENCE MODE

Activate ……..MENU-2-2-5-9
Misc. ……."6"
Coarse……..…."5"
Fine ……..."4"
Color (R,G or B)……AUDIO
Item No……..VIDEO
Adjust/Move…….ADJUST
Cursor Toggle……ENTER
Save & Exit…..MENU (twice)

DF
(MENU-2-2-5-9-5)

Item	Abbr.	48/55/65/73 Inch	50/60 Inch
0	DFH	-220	-220
1	DFV	-100	-140

CONV MISC
(MENU-2-2-5-9-6)

Item	Abbr.	All Models
9	DPHS	1
10	DOFS	34

[Video Circuit]

10. Lens Focus

Purpose To set the Lens position for optimum focus.

Symptom: Poor focus

Measuring Instrument	-----
Test Point	------
Ext. Trigger	------
Measuring Range	-----
Input Signal	Monoscope
Input Terminal	Video Input

Note: *This adjustment must be done before Electrostatic Focus. Perform this adjustment for RED, GREEN, and BLUE monochrome pictures.*

1. Supply a VIDEO signal (Monoscope).
2. Cover the Red and Blue Lens (producing a green raster).
3. Adjust the Green Lens for best focus at the center of the Monoscope pattern.

   Note: *Attach a white paper to the screen center. During adjustment, observe the picture on the screen from inside for easier adjustment.*

4. Repeat Steps 2 and 3 for the Red and Blue monochrome pictures.

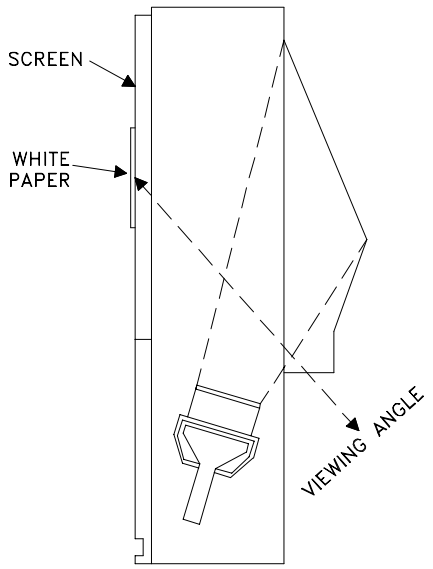

[CRT Circuit]

11. Electrostatic Focus & (Alignment Magnet)

Purpose: To set electrostatic focus to the optimum point.

Symptom: Poor focus.

Measuring Instrument	-----
Test Point	-----
Ext. Trigger	------
Measuring Range	------
Input Signal	Monscope & Crosshatch
Input Terminal	Video Input

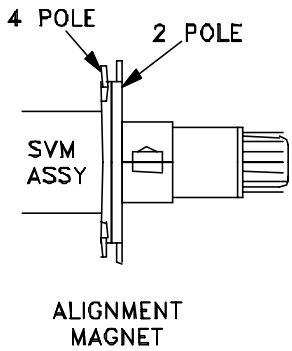

Note: *This adjustment must be performed after the Sub Contrast adjustment.*

Alignment Magnet Adjustment (WS-55411, WS-656411 and WS-73411 Only)

This adjustment must be performed before Static Focus Adjustment

1. Supply a Crosshatch with Center Dot signal to a Video Input.
2. Select a Green raster using the table below.
3. Roughly adjust Green Focus VR.
4. Rotate Green Focus VR CCW so the center dot is about 10mm diameter.
5. Adjust the Green 4 Pole Magnet for the roundest center dot.
6. Set the Green Focus VR for optimum focus.
7. Repeat the procedure with a Red raster and adjust the Red 4 Pole Magnet.
8. Use silicon to lock the magnets in place.

Static Focus Adjustment (All Models)

1. Supply a Monoscope signal to a Video Input
2. Activate A/V Reset
3. Select Red, Green or Blue rasters using the table below.
3. Set the Red, Green and Blue Focus VRs for optimum focus at the top center of the picture..

Raster Color Selection

Color Raster	Activation Code
Red	MENU-2-2-5-9-1
Green	MENU-2-2-5-9-2
Blue	MENU-2-2-5-9-3

[On Screen Display]

12.Character Position

Purpose To position the character display horizontally.

Symptom: Incorrect display position

Measuring Instrument	-----
Test Point	-----
Ext. Trigger	------
Measuring Range	------
Input Signal	Video Signal (HD/NTSC)
Input Terminal	ANT-A/DTV

1. Supply a Monoscope signal to the Video or RF Input.
2. Select the Monoscope as the source for the main picture (Input button).
3. Activate the Service Mode, HR Function.
4. Use the Adjust Right/Left buttons to center the display horizontally. (A = B)
5. Save data and exit the Service Mode..

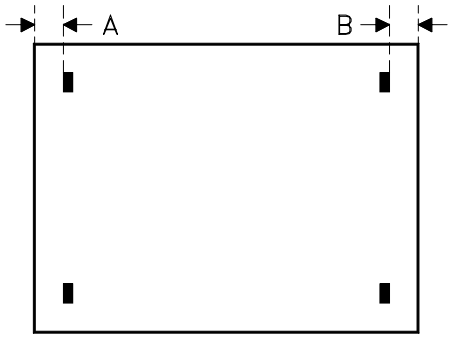

[Conv/Defl]

13. Geometry Preset

Purpose: To preset data controlling raster geometry

Symptom: Raster distortion.

Measuring Instrument	-----
Test Point	------
Ext. Trigger	------
Measuring Range	-----
Input Signal	NTSC & HD
Input Terminal	Video & DTV Inputs

Note: *This procedure is usually only necessary if an E2PROM is replaced in the TV Control or Convergence circuits.*

Procedure

In the Circuit Adjustment and Coarse Convergence Modes pre-set the data to the values given in the Tables below.

DEFL JUNGLE (MENU-2-2-5-7)

#	Abbrev.	48"		50"& 60"		55"		65"		73"	
		HD	NTSC	HD	NTSC	HD	NTSC	HD	NTSC	HD	NTSC
1	HWID	31	31	31	31	29	31	31	31	31	31
2	HKEY	31	31	31	31	25	24	31	24	31	31
3	EWPT	31	31	31	31	31	31	31	31	31	31
7	VHGT	28	40	30	37	17	15	44	40	28	40
8	VLIN	5	5	5	5	5	5	7	7	5	5
9	VSCN	0	0	0	0	0	0	0	0	0	0
18	VPOS	31	31	31	31	31	31	31	31	31	31

COARSE CONV GREEN (MENU-2-2-5-9-5)

#	Abbrev.	WS-48311		VS-50111		WS-55311		WS-55411		VS-60111		WS-65311		WS-65411		WS-73411	
		SD	HD	SD	HD	SD	HD	SD	HD	SD	HD	SD	HD	SD	HD	SD	HD
1	HSTA	0	0	0	0	0	0	0	0	0	0	0	0	0	0	0	0
2	VSTA	0	0	0	0	0	0	0	0	0	0	0	0	0	0	0	0
3	SKEW	0	0	0	0	0	0	0	0	0	0	0	0	0	0	0	0
4	TILT	0	0	0	0	0	0	0	0	0	0	0	0	0	0	0	0
5	HWID	0	10	5	5	20	20	0	0	5	5	0	0	0	0	0	0
6	HLIN	0	10	15	15	0	0	10	10	15	15	10	10	10	10	10	10
7	SPCC	0	0	0	0	0	0	0	0	0	0	0	0	0	0	0	0
8	HKEY	0	0	0	0	0	17	10	10	0	0	0	0	0	0	0	0
9	TBPC	-200	-169	-150	-150	-180	-190	-200	-190	-150	-150	-200	-170	-200	-170	-200	-180
10	VKEY	0	14	0	20	0	14	15	10	0	20	15	10	15	10	15	10
11	VWID	11	17	40	30	20	30	30	30	40	30	30	30	30	30	30	30
12	VLIN	0	0	0	0	0	0	0	0	0	0	0	0	0	0	0	0

COARSE CONV RED (MENU-2-2-5-9-5)

#	Abbrev.	WS-48311		VS-50111		WS-55311		WS-55411		VS-60111		WS-65311		WS-65411		WS-73411	
		SD	HD	SD	HD	SD	HD	SD	HD	SD	HD	SD	HD	SD	HD	SD	HD
1	HSTA	50	50	50	50	50	50	50	50	50	50	50	50	50	50	50	50
2	VSTA	0	0	0	0	0	0	0	0	0	0	0	0	0	0	0	0
3	SKEW	0	0	0	10	0	0	0	0	0	10	0	0	0	0	0	0
4	TILT	0	0	0	0	0	0	0	0	0	0	0	0	0	0	0	0
5	HLIN	-195	-170	-140	-125	-150	-170	-180	-170	-140	-125	-150	-150	-150	-150	-220	-190
6	HWID	22	30	5	0	0	0	0	0	5	0	0	0	0	0	0	0
7	VKEY	-100	-85	15	-87	-70	-90	-100	-95	15	-87	-90	-70	-90	-70	-100	-110
8	VWID	0	16	0	0	0	0	0	0	0	0	0	0	0	0	0	0
9	VLIN	0	0	0	0	0	0	0	0	0	0	0	0	0	0	0	0
10	TBPC	-200	-169	-150	-150	20	20	20	20	-150	-150	20	20	20	20	20	20
11	SDBW	0	0	0	0	30	30	30	30	0	0	30	30	30	30	30	30

COARSE CONV BLUE (MENU-2-2-5-9-5)

#	Abbrev.	WS-48311		VS-50111		WS-55311		WS-55411		VS-60111		WS-65311		WS-65411		WS-73411	
		SD	HD	SD	HD	SD	HD	SD	HD	SD	HD	SD	HD	SD	HD	SD	HD
1	HSTA	-50	-50	-50	-50	-50	-50	-50	-50	-50	-50	-50	-50	-50	-50	-50	-50
2	VSTA	0	0	0	0	0	0	0	0	0	0	0	0	0	0	0	0
3	SKEW	0	0	0	10	0	0	0	0	0	10	0	0	0	0	0	0
4	TILT	0	0	0	0	0	0	0	0	0	0	0	0	0	0	0	0
5	HLIN	190	165	150	160	160	175	175	170	150	160	160	150	160	150	230	200
6	HWID	-14	-25	-20	-30	0	0	0	0	-20	-30	0	0	0	0	0	0
7	VKEY	100	90	75	75	75	80	70	75	75	75	90	65	90	65	80	90
8	VWID	0	0	-20	-20	0	0	0	0	-20	-20	0	0	0	0	0	0
9	VLIN	0	0	0	0	0	0	0	0	0	0	0	0	0	0	0	0
10	TBPC	0	0	0	0	0	20	0	0	0	0	0	0	0	0	0	0
11	SDBW	0	0	0	0	-30	-30	-30	-30	0	0	-30	-30	-30	-30	-30	-30

[Deflection Circuit]

14: Deflection Geometry Height & Width Adjustment

Purpose: To set the height, width and linearity of the raster.

Symptom: Incorrect height, width and/or linearity.

Measuring Instrument	-----
Test Point	-----
Ext. Trigger	------
Measuring Range	-----
Input Signal	Monoscope (NTSC & HD)
Input Terminal	Video & DTV Inputs

CIRCUIT ADJUST MODE

Activate …….. MENU-2-2-5-7
Function ……..……..AUDIO
Item No. ……..…VIDEO
Adjust Data ……..ADJUST
Save Data …. ……ENTER
Exit ……..MENU (twice)

Preliminary:

1. DO NOT change the initial values for “#8 VLIN” in the Defl. Jungle Function.
2. DO NOT exceed the following VHGT adjustment ranges:
   NTSC ... from -4 to +10
   HD ... from -10 TO +5

NTSC Mode

1. Supply an NTSC Monoscope signal to a Video Input.
2. Select the Monoscope as the signal source.
3. Activate the Adjustment Mode, JNGL Function.
4. Select and adjust each of the following items.
   - “7 VHGT” ... so the vertical marker sum = 4
   - “1 HWD” ... so the horizontal marker sum = 7
5. Save data and Exit the Service Mode.

HD Mode

1. Supply an HD Monoscope signal to the DTV HD Inputs.
2. Select the DTV Inputs as the signal source (Input button)
3. Activate the Service Mode, Defl. Jungle Function.
4. Select and adjust each of the following items.
   - “7 VHGT” ... so the vertical marker sum = 2
   - “1 HWD” ... so the horizontal marker sum = 5
5. Save data and Exit the Service Mode.

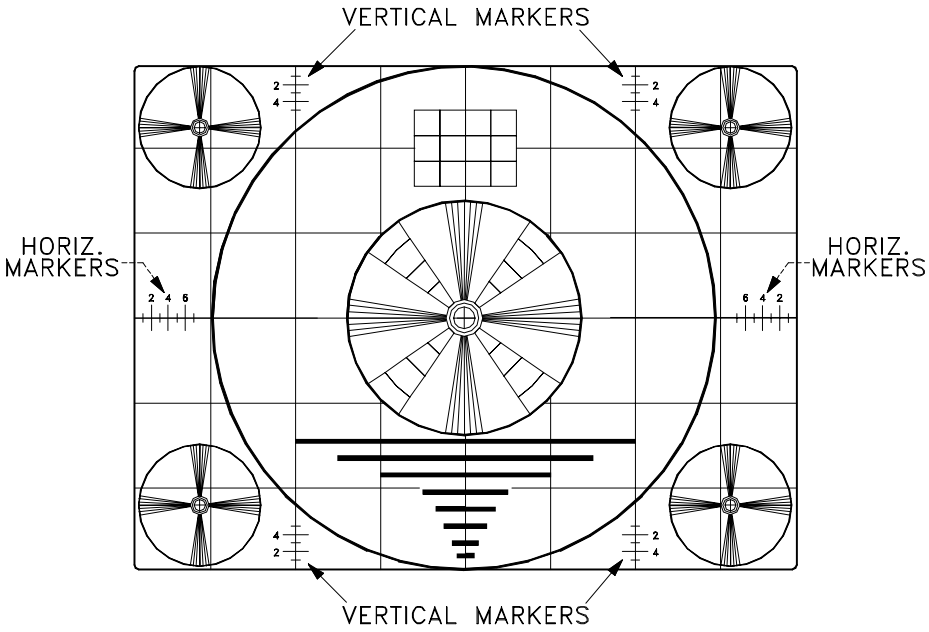

[Convergence Circuit]

15. Convergence Geometry Adjustment

Purpose: To set the Convergence circuit geometry adjustments.

Symptom: Raster distortion at the top, bottom or sides of the picture.

Measuring Instrument	-----
Test Point	------
Ext. Trigger	------
Measuring Range	-----
Input Signal	NTSC -- None HD -- HD sync
Input Terminal	Video & DTV Inputs

Note: *Deflection Circuit Geometry must be performed before this adjustment.*

NTSC mode

1. Select a Video Input with no signal.
2. Activate the Convergence Mode, Coarse Green.
3. Adjust the Coarse Green Items shown below for straight crosshatch lines.
4. Select the Fine Green Mode, a Cursor is displayed on the crosshatch.
5. Use the Cursor to adjust for straight crosshatch lines.
6. Exit the Convergence Mode.

HD mode

1. Supply horizontal and vertical HD sync to the DTV Inputs and select the DTV Inputs as the source.
   Note: I*f an HD signal is not available, use the Conv. HD with No Signal Procedure*
2. Enter the Convergence Mode, Coarse Green.
3. Repeat NTSC Steps 3 through 6 in the HD mode.

CONVERGENCE MODE

Activate ……..MENU-2-2-5-9
Misc. ……."6"
Coarse……."5"
Fine ……..."4"
Color (R,G or B)……AUDIO
Item No……..VIDEO
Adjust/Move…….ADJUST
Cursor Toggle……ENTER
Save & Exit…..MENU (twice)

CONV. HD WITH NO SIGNAL

1. MENU-2-2-7-0
2. Set DTV Port to 1080i
3. MENU (Twice)
4. INPUT select DTV inputs
5. MENU-2-2-5-9

After Adjusting, set the DTV Port to AUTO

COARSE GREEN ADJUSTMENTS

3 SKEW

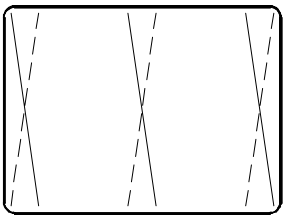

4 TILT

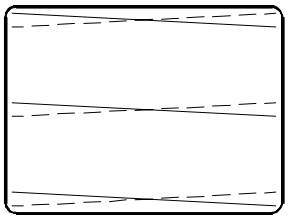

6 HLIN

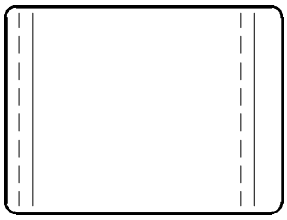

7 SPCC

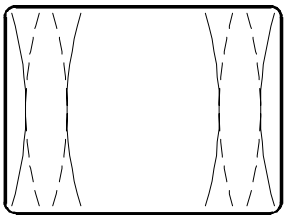

8 HKEY

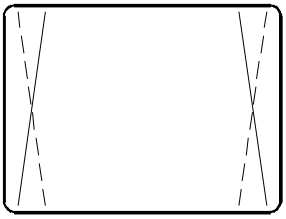

9 TBPC

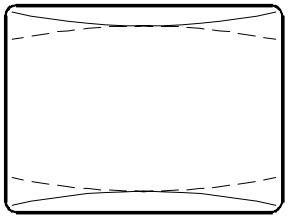

10 VKEY

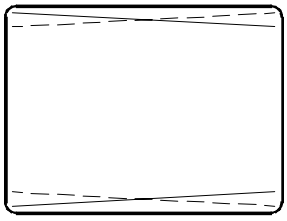

12 VLIN

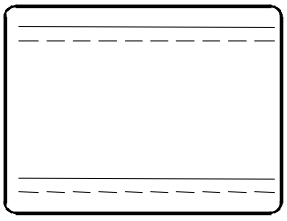

[Convergence Circuit]

16. Centering and Static Convergence

Purpose: To converge red, green and blue at the center of the screen

Symptom: Color edging over the entire picture.

Measuring Instrument	-----
Test Point	-----
Ext. Trigger	------
Measuring Range	-----
Input Signal	NTSC -- Monoscope HD -- Monoscope
Input Terminal	Video & DTV Inputs

CONVERGENCE MODE

Activate ……..MENU-2-2-5-9
Misc. ……."6"
Coarse……."5"
Fine ……..."4"
Color (R,G or B)……AUDIO
Item No……..VIDEO
Adjust/Move…….ADJUST
Cursor Toggle……..ENTER
Save & Exit…..MENU (twice)

Preliminary

Degauss the shield cover and bracket unit of the CRT assembly and chassis.
DO NOT degauss the CPM Assemblies.

HD mode

1. Supply an HD Monoscope signal to the DTV Inputs.
2. Select the DTV Inputs as the signal source (Input button).
3. Enter the Convergence Coarse mode.
4. Set the data for the “HSTA” and “VSTA” items to:

GREEN	RED	BLUE
HSTA = 0	HSTA = 50	HSTA = -50
VSTA = 0	VSTA = 0	VSTA = 0

5. In the Coarse Green mode:
   - Center the Green Raster using the Green Centering Magnet.
   - Rotate the Green Deflection Yoke to correct any tilt.
6. In the Coarse Red mode, use the Red Centering Magnet to converge red on the green at the center of screen. Correct any red tilt with the Red Deflection Yoke.
7. In the Coarse Blue mode, repeat Step 6 using the Blue Centering magnet and the Blue Deflection Yoke.
8. Exit the Convergence mode.

SD mode

1. Supply an NTSC Monoscope signal to a Video Input.
2. Select the Monoscope as the signal source (Input button).
3. Enter the Convergence Coarse Green mode.
4. If needed, center the green raster using “1 HSTA” and “2 VSTA” adjustments.
5. In the Coarse Red mode, use “1 HSTA” and “2 VSTA” adjustments to converge the red on the green at the center of the screen.
6. In the Coarse Blue mode, repeat step 5 to converge the blue of the green.
7. Exit the Convergence Mode

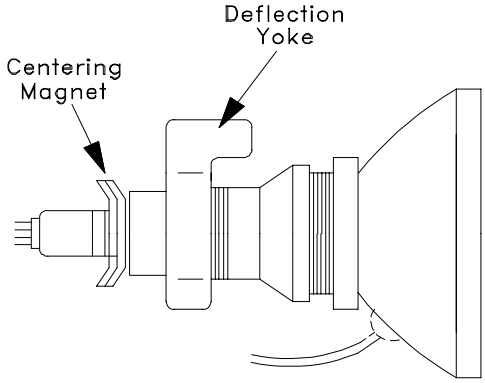

[Convergence Circuit]

17. Coarse Convergence

Purpose: To converge red and blue on green at the edges of the screen.

Symptom: Color edging at the top, bottom and sides of the screen.

Measuring Instrument	-----
Test Point	------
Ext. Trigger	------
Measuring Range	-----
Input Signal	NTSC -- None HD -- HD sync
Input Terminal	Video & HD Inputs

SD mode

1. Select an External Input with no signal.
2. Activate the Convergence Mode, Coarse Red.
3. Adjust the Items shown below to converge the red on the green.
4. Select Coarse Blue mode.
5. Adjust the Items shown below to converge the blue on the green.
   Note: *If center convergence shifts, use red and blue Items "0 HSTA" and "1 VSTA" to correct the shift.*
6. Exit the Convergence Mode.

HD mode

1. Supply horizontal and vertical HD sync to the DTV Inputs and select the DTV Inputs as the source.
   Note: I*f an HD signal is not available, use the Conv. HD with No Signal Procedure.*
2. Repeat SD Steps 2 through 5 in the HD mode.
3. Exit the Convergence mode.

CONVERGENCE MODE

Activate ……..MENU-2-2-5-9
Misc. ……."6"
Coarse……."5"
Fine ……..."4"
Color (R,G or B)……AUDIO
Item No……..VIDEO
Adjust/Move…….ADJUST
Cursor Toggle……..ENTER
Save & Exit…..MENU (twice)

CONV. HD WITH NO SIGNAL

1. MENU-2-2-7-0
2. Set DTV Port to 1080i
3. MENU (Twice)
4. INPUT select DTV inputs
5. MENU-2-2-5-9

After Adjusting, set the DTV Port to AUTO

COARSE CONVERGENC RED & BLUE ADJUSTMENTS

1 HSTA*

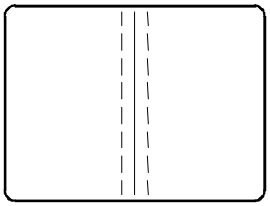

2 VSTA*

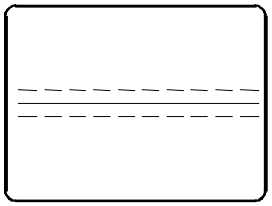

3 SKEW

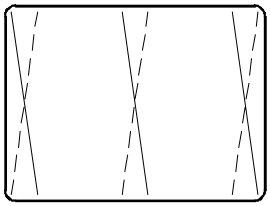

4 TILT

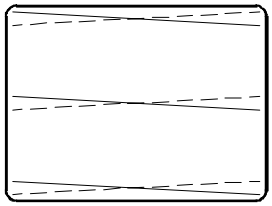

5 HLIN

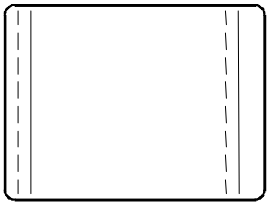

6 HWID

7 VKEY

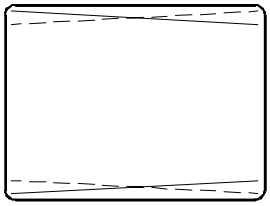

8 VWID

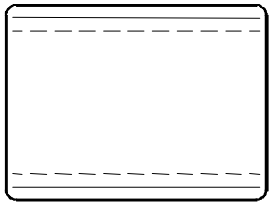

9 VLIN

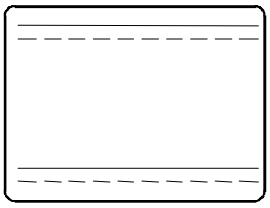

10 TBPC

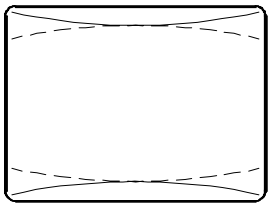

11 HSBW

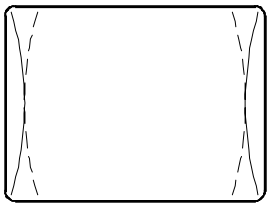

* Data should not exceed ±100

[Convergence Circuit]

18. Fine Convergence

Purpose: To converge red, green and blue at the edges of the screen

Symptom: Color edging at the edges of the picture.

Measuring Instrument	-----
Test Point	-----
Ext. Trigger	------
Measuring Range	-----
Input Signal	NTSC -- None HD -- HD sync
Input Terminal	Video & DTV Inputs

CONVERGENCE MODE

Activate ……..MENU-2-2-5-9
Misc. ……."6"
Coarse……......"5"
Fine ……..."4"
Color (R,G or B)……AUDIO
Item No……..VIDEO
Adjust/Move…….ADJUST
Cursor Toggle……ENTER
Save & Exit…..MENU (twice)

SD Fine Adjustment

1. Select an External Input, no signal.
2. Activate the Convergence Mode, Fine Red.
3. Use the Cursor to converge red on the green.
4. Select the Fine Blue mode.
5. Use the Cursor to converge blue on the green.
6. Exit the Convergence mode.

HD Fine Adjustment

1. Supply an HD signal (sync only) to the DTV inputs and select DTV with the "Audio" button.
   Note: I*f an HD signal is not available, use the Conv. HD with No Signal Procedure.*
2. Repeat SD Fine Adjustment Steps 2 through 6, in the HD mode.

CONV. HD WITH NO SIGNAL

1. MENU-2-2-7-0
2. Set DTV Port to 1080i
3. MENU (Twice)
4. INPUT select DTV inputs
5. MENU-2-2-5-9

After Adjusting, set the DTV Port to AUTO

CHIP PARTS REPLACEMENT

Some resistors, shorting jumpers (0 Ohm resistors), ceramic capacitors, transistors and diodes are chip parts. The following precautions should be taken when replacing these parts.

Cautions:

1. Use a fine tipped, well insulated soldering iron (approximately 30 watts), and tweezers.
2. Melt the solder and remove the chip parts carefully so as not to tear the copper foil from the printed circuit board.
3. Discard removed chips; do not reuse them.
4. Do not apply heat for more than 3 (three) seconds to new chip parts.
5. Avoid using a rubbing stroke when soldering.
6. Take care not to scratch, or damage the chip parts when soldering.
7. Supplementary cementing is not required.

Chip Parts Removal (Resistors, Capacitors, etc.)

1. Grasp the part with tweezers. Melt the solder at both sides alternately, and remove one side of the part with a twisting motion.
2. Melt the solder at the other side and remove the part.

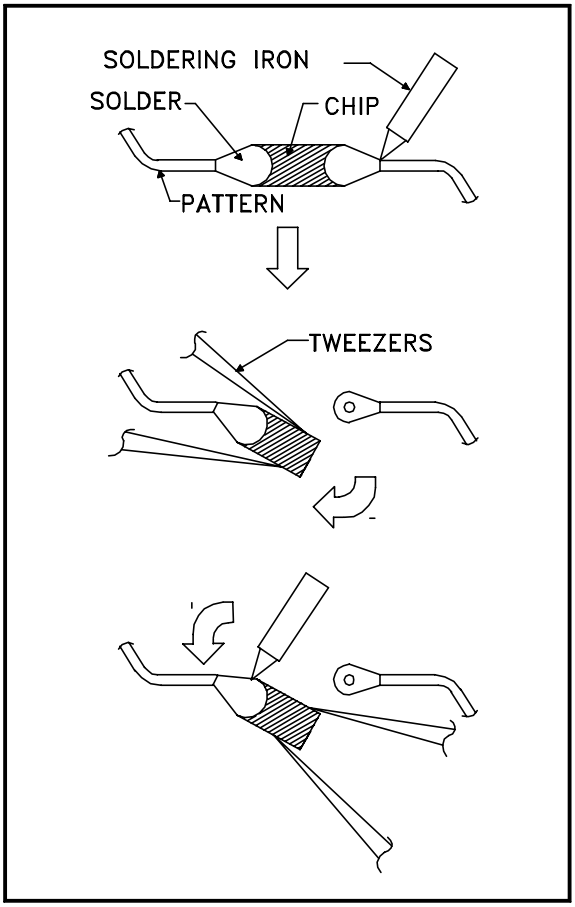

Chip Parts Removal (Transistors)

1. Melt the solder of one lead and lift the side of that lead upward.
2. Simultaneously melt the solder of the other two leads and lift the part from the PCB.

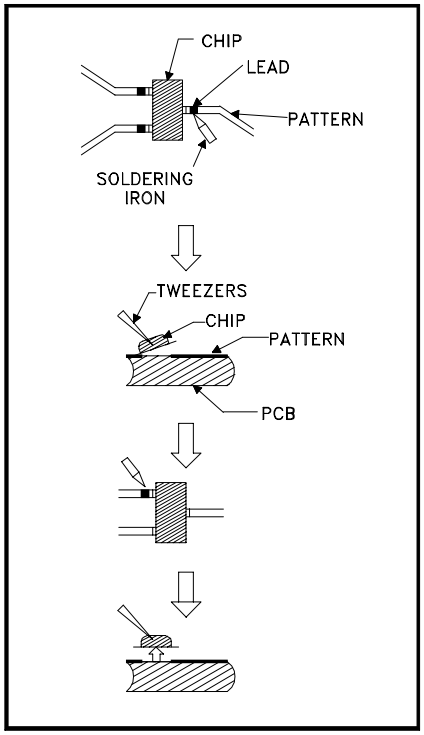

Replacement

1. Presolder the contact points on the circuit pattern.
2. Press the part downward with tweezers and apply the soldering iron as shown.

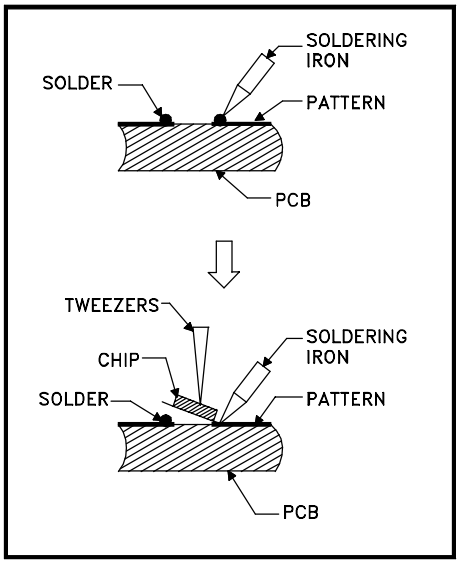

REPLACEMENT PARTS

Parts Ordering

To expedite delivery of replacement parts orders, specify the following:

1. Model Number/Serial Number
2. Part Number and description
3. Quantity

Note: Unless complete information is supplied, delay in processing of orders will result.

Critical and Warranty Parts Designation

Critical Electrical Components are indicated by **Bold Type** in the Parts List, and in the schematic diagrams by shading.

Warranty Return Parts are indicated in the Parts List with an **(*)**.

Parts Tolerance Codes

Refer to the following chart for tolerance characteristics of electrical components.

MARK	B	C	D	F	G	J	K
Tolerance %	± 0.1	± 0.25	± 0.5	± 1	± 2	± 5	± 10

MARK	M	N	V	X	Z	P	Q
Tolerance %	± 20	± 30	± 10	+ 40 - 20	+80 - 20	+100 - 0	+30 - 10

MARK	M	N	V	X	Z
Tolerance (pF)	± 0.1	± 0.25	± 0.5	± 1	± 2

Replacement Part Notes

When Replacing the RF-Switch (RF-SW) or the PCB-SIGNAL:

1. Remove the PLATE-RF SW from the original component, shown in the diagram at the right.
2. Install the PLATE-RF SW on the new RF-SW.

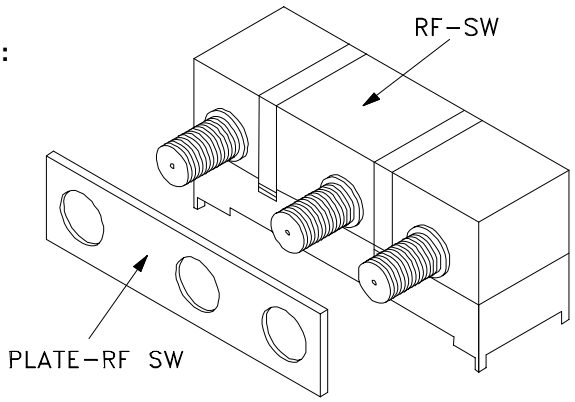

When Replacing the EEPROM

The EEPROMs (IC7C01, IC2K02 and IC8D0) store the adjustment data. After replacing the EEPROM, readjust the data to the values given in the tables on pages 28 to 30. If good performance is not obtained with these values, perform the Adjustment Procedure(s) given in the Description and Adjustment columns.

QUICK REFERENCE FOR COMMON REPLACEMENT PARTS

CRT ASSEMBLIES

MODEL	ASSY-CRT-RED	ASSY-CRT-GREEN	ASSY-CRT-BLUE
VS-50111	251C215010	251C215020	251C215030
VS-60111	251C215040	251C215050	251C215060
WS-48311	251C216010	251C216020	251C216030
WS-55311	251C216040	251C216050	251C216060
WS-55411	251C216070	251C216080	251C216090
WS-65311	251C217010	251C217020	251C217030
WS-65411	251C217040	251C217050	251C217060
WS-73411	251C217070	251C217080	251C217090

REMOTE CONTROL

290P111010	REMOTE CONTROL	VS-50111 / WS-60111 / WS-48311 / WS-55311 / WS-65311
290P111020	REMOTE CONTROL	WS-55411 / WS-65411 / WS-73411

HIGH VOLTAGE / DEFLECTION COMPONENTS

Q5A31	**261P122010**	**HORIZ-OUT 2SC5778**	
Q5A51	**261P082010**	**HV-OUT 2SK2771-O1R**	
T5A51	**334P281010**	**TRANS-FLYBACK**	
	129P059050	VR-FOCUS	
	338P054010	SVM ASSY	VS-50111 / VS-60111 / WS-48311 / WS-55311 / WS-65311
	338P054020	SVM ASSY	WS-55411 / WS-65411 / WS-73411
	330P276030	**DEFL-YOKE**	**VS-50111 / VS-60111**
	330P276040	**DEFL-YOKE**	**WS-48311 / WS-55311**
	330P276050	**DEFL-YOKE**	**WS-55411 / WS-65311 / WS-65411 / WS-73411**
	453B036010	**CAP-ANOD - SHORT - RED**	**ALL EXCEPT WS-73411**
	453B036020	**CAP-ANODE - LONG - G&B**	**ALL EXCEPT WS-73411**
	453B036070	**CAP-ANOD - SHORT - RED**	**WS-73411 ONLY**
	453B036080	**CAP-ANODE - LONG - G&B**	**WS-73411 ONLY**

MODEL	MIRROR	LENTICULAR SCREEN	FRESNEL LENS
VS-50111	767D072020	491P099010	491P100010
VS-60111	767D072010	491P109010	491P110010
WS-48311	767D072040	491P138010	491P139010
WS-55311	767D055040	491P125020	491P126020
WS-55411	767D072030	491P103030	491P104030
WS-65311	767D048090	491P145010	491P146010
WS-65411	767D048090	491P145010	491P146010
WS-73411	767C031010	491P085030	491P086030

[#] Model Legend: (1) VS-50111,, (2) VS-60111, (3) WS-48311, (4) WS-55311, (5) WS-55411, (6) WS-65311, (7) WS-65411, (8) WS-73411

Ref #	Part #	Part Name & Description	[#]
		TUBES	
	251C215010	**ASSY-CRT-RED**	**1**
	251C215020	**ASSY-CRT-GREEN**	**1**
	251C215030	**ASSY-CRT-BLUE**	**1**
	251C215040	**ASSY-CRT-RED**	**2**
	251C215050	**ASSY-CRT-GREEN**	**2**
	251C215060	**ASSY-CRT-BLUE**	**2**
	251C216010	**ASSY-CRT-RED**	**3**
	251C216020	**ASSY-CRT-GREEN**	**3**
	251C216030	**ASSY-CRT-BLUE**	**3**
	251C216040	**ASSY-CRT-RED**	**4**
	251C216050	**ASSY-CRT-GREEN**	**4**
	251C216060	**ASSY-CRT-BLUE**	**4**
	251C216070	**ASSY-CRT-RED**	**5**
	251C216080	**ASSY-CRT-GREEN**	**5**
	251C216090	**ASSY-CRT-BLUE**	**5**
	251C217010	**ASSY-CRT-RED**	**6**
	251C217020	**ASSY-CRT-GREEN**	**6**
	251C217030	**ASSY-CRT-BLUE**	**6**
	251C217040	**ASSY-CRT-RED**	**7**
	251C217050	**ASSY-CRT-GREEN**	**7**
	251C217060	**ASSY-CRT-BLUE**	**7**
	251C217070	**ASSY-CRT-RED**	**8**
	251C217080	**ASSY-CRT-GREEN**	**8**
	251C217090	**ASSY-CRT-BLUE**	**8**
		INTEGRATED CIRCUITS	
IC2K00	270P623010	IC - CXA2069Q	
IC2K02	275P533010	IC-C-MOS - M24C64WM6T	
IC2L00	270P658030	IC - CXA2019AQ/T4	
IC2L01	272P379020	IC - LM1881MX (NSC)	
IC2LA0	270P658030	IC - CXA2019AQ/T4	
IC2LA1	272P379020	IC - LM1881MX (NSC)	
IC2M00	275P496010	IC-C-MOS - UPD64082GF-3BA	
IC2MD1	272P379020	IC - LM1881MX (NSC)	
IC2MO1	275P531010	IC-C-MOS - MSM54V16258B-45TS-K	
IC2N00	270P870010	IC - CXA2151Q	
IC2P00	275P718010	IC-C-MOS - TC74HC4053FT	
IC2P01	275P718010	IC-C-MOS - TC74HC4053FT	
IC2S00	270P870010	IC - CXA2151Q	
IC2V00	275P733010	IC-C-MOS - CXA2150AQ	
IC2Y01	275P735010	IC-C-MOS - TDA8601TD	
IC3A01	275P731010	IC-C-MOS - MSP3445G	
IC3E01	**270P750010**	**IC - LA4663**	
IC3K00	270P838010	IC-C-MOS - NJM2520M	
IC3K01	270P838010	IC-C-MOS - NJM2520M	
IC4B01	**270P261020**	**IC - TDA8177**	
IC5A00	**267P163010**	**HIC - MSPAD401**	
IC5A01	**270P914010**	**IC - NJM2119D**	
IC5A02	**266P727040**	**IC - UPC339C/LM339N**	
IC5A03	**270P704010**	**IC - LM4040BIZ-10.0**	
IC5A05	270P816010	IC - NJM431L	
IC6B01	**270P667010**	**IC - TDA6120Q**	
IC6G01	**270P667010**	**IC - TDA6120Q**	
IC6R01	**270P667010**	**IC - TDA6120Q**	
IC7A00	**275P729010**	**IC-C-MOS - M306V2ME-192FP**	
IC7C01	275P533010	IC-C-MOS - M24C64WM6T	
IC7C10	270P706020	IC - MAX823REUK	
IC7D00	275P434010	IC-C-MOS - TC74HC4066AFT	
IC7D01	275P560010	IC - ADS931E A2D CONVERTER	
IC7D02	275P560010	IC - ADS931E A2D CONVERTER	
IC7D03	275P560010	IC - ADS931E A2D CONVERTER	
IC7D10	275P769010	IC-C-MOS - TC74AC157FT	
IC7D11	275P769010	IC-C-MOS - TC74AC157FT	
IC7E00	275P434010	IC-C-MOS - TC74HC4066AFT	
IC7E01	275P560010	IC - ADS931E A2D CONVERTER	
IC7E02	275P560010	IC - ADS931E A2D CONVERTER	
IC7E03	275P560010	IC - ADS931E A2D CONVERTER	
IC7E10	275P769010	IC-C-MOS - TC74AC157FT	
IC7E11	275P769010	IC-C-MOS - TC74AC157FT	
IC7G01	275P247010	IC-C-MOS - MB40C958VPFV	
IC7H00	275P799010	IC-C-MOS - UPD85008XAGD	
IC7H01	270P898030	IC - SI-3025LSA-TL	
IC7H02	275P716010	IC-C-MOS - uPD4516161AG5-A10-9NF	
IC7H03	275P716010	IC-C-MOS - uPD4516161AG5-A10-9NF	
IC7H04	270P348010	IC - TLC2932IPW	
IC7H05	270P348010	IC - TLC2932IPW	
IC7H06	274P901010	IC-C-MOS - TC74HCT7007AF-EL	
IC7H07	275P236020	IC-C-MOS - TC74LVX244FT	
IC7H08	274P901010	IC-C-MOS - TC74HCT7007AF-EL	
IC7H09	275P278010	IC-C-MOS - TC74LVX14FT	
IC7H10	275P278010	IC-C-MOS - TC74LVX14FT	
IC7K21	270P831010	IC-C-MOS - OPA2350PA	578
IC7V01	275P362010	IC-C-MOS - Z86130	
IC8C01	**267P141030**	**HIC - STK392-110**	
IC8C02	**267P141030**	**HIC - STK392-110**	
IC8D00	275P595010	IC-C-MOS - CM0022AF	
IC8D01	263D011010	IC-C-MOS - 32K EEPROM	
IC8E00	270P751010	IC - TL084CD	
IC8E01	270P751010	IC - TL084CD	
IC8E02	270P751010	IC - TL084CD	
IC8E03	275P721010	IC-C-MOS - CD0031AM	
IC9A20	**267P164010**	**HIC - TNY264P**	
IC9A50	**267P161010**	**HIC - STR-F6428S**	
IC9A51	**267P062050**	**HIC - SE110N**	
IC9B01	**270P668040**	**IC - SI-8120S**	
IC9B02	**270P668020**	**IC - SI-8050S**	
IC9C01	270P928010	IC - BA17809FP	
IC9C11	270P928010	IC - BA17809FP	
IC9C21	270P677020	IC - BA05FP	
IC9C31	270P677010	IC - BA033FP	
IC9C41	270P677010	IC - BA033FP	

TRANSISTORS

CHIP Type Transistors (Listed by Part No.)

Type	Part No.	Description
PNP	260P817010	2SA1037K-Q
PNP	260P817030	2SA1037K-S
NPN	260P818010	2SC2412K-Q
NPN	260P818030	2SC2412K-S
NPN	260P835030	2SC2413K-Q
PNP	261P801010	2SA1252-5,6

Conventional Transistors (By Ref #)

Ref #	Part #	Part Name & Description	[#]
Q2V30	260P559030	TR - 2SC1740S-S	
Q4B01	260P559030	TR - 2SC1740S-S	
Q5A01	**261P126010**	**TR - 2SD2052**	

[#] Model Legend: (1) VS-50111,, (2) VS-60111, (3) WS-48311, (4) WS-55311, (5) WS-55411, (6) WS-65311, (7) WS-65411, (8) WS-73411

Ref #	Part #	Part Name & Description	[#]
Q5A02	260P561020	TR - 2SA1371-E	
Q5A03	260P386010	TR - 2SC2230-GR	
Q5A04	260P559030	TR - 2SC1740S-S	
Q5A05	260P560040	TR - 2SA933S-S	
Q5A06	260P560040	TR - 2SA933S-S	
Q5A07	**260P416030**	**TR - 2SC2274-F,K-F**	
Q5A07	**260P559030**	**TR - 2SC1740S-S**	
Q5A08	260P559030	TR - 2SC1740S-S	
Q5A09	**260P559030**	**TR - 2SC1740S-S**	
Q5A09	**260P255040**	**TR - 2SA950-Y**	
Q5A10	260P560040	TR - 2SA933S-S	
Q5A20	**260P560040**	**TR - 2SA933S-S**	
Q5A31	**261P122010**	**TR - 2SC5778**	
Q5A32	261P127010	TR - 2SK2774-01	
Q5A33	260P559030	TR - 2SC1740S-S	
Q5A34	260P561020	TR - 2SA1371-E	
Q5A35	260P386010	TR - 2SC2230-GR	
Q5A36	260P630010	TR - 2SD2012	
Q5A37	260P559030	TR - 2SC1740S-S	
Q5A38	260P559030	TR - 2SC1740S-S	
Q5A39	260P560040	TR - 2SA933S-S	
Q5A40	260P560040	TR - 2SA933S-S	
Q5A51	261P082010	TR - 2SK2771-01R	
Q5H01	260P559050	TR - 2SC1740S-E	
Q5H03	260P559050	TR - 2SC1740S-E	
Q5H04	260P559050	TR - 2SC1740S-E	
Q5H05	260P559050	TR - 2SC1740S-E	
Q5H06	260P560040	TR - 2SA933S-S	
Q5H09	260P559050	TR - 2SC1740S-E	
Q5H10	260P560040	TR - 2SA933S-S	
Q5H11	**260P644040**	**TR - 2SA1535-R**	
Q5H12	**260P647040**	**TR - 2SC3944-R**	
Q5H13	260P560040	TR - 2SA933S-S	
Q5K00	260P664030	TR - 2SC4636	
Q5K01	260P664030	TR - 2SC4636	
Q5K02	260P559030	TR - 2SC1740S-S	
Q5K03	260P560040	TR - 2SA933S-S	
Q6B01	260P559030	TR - 2SC1740S-S	
Q6B02	260P560040	TR - 2SA933S-S	
Q6B03	260P560040	TR - 2SA933S-S	
Q6G01	260P559030	TR - 2SC1740S-S	
Q6R01	260P559030	TR - 2SC1740S-S	
Q7B02	261P114010	TR - 2SA1585STPR	578
Q7K21	260P559030	TR - 2SC1740S-S	578
Q9A50	260P416030	TR - 2SC2274-F,K-F	
Q9A51	**260P559030**	**TR - 2SC1740S-S**	
Q9A54	260P559030	TR - 2SC1740S-S	
Q9A55	260P559030	TR - 2SC1740S-S	
Q9B01	260P559030	TR - 2SC1740S-S	
Q9B02	260P560040	TR - 2SA933S-S	
Q9B03	260P559030	TR - 2SC1740S-S	

DIODES

Ref #	Part #	Part Name & Description	[#]
D2W01	264P828010	D-CHIP - DAN202U/MA142WK	
D2W02	264P828010	D-CHIP - DAN202U/MA142WK	
D2W03	264P828010	D-CHIP - DAN202U/MA142WK	
D2W04	264P828010	D-CHIP - DAN202U/MA142WK	
D4B01	264D056020	DIODE - S5500D/EM1Z/ERB12-02RK	
D4B04	264P045040	DIODE - 1S24710M	
D5A01	264P045040	DIODE - 1S24710M	
D5A02	264D056020	DIODE - S5500D/EM1Z/ERB12-02RK	
D5A03	264P045040	DIODE - 1S24710M	
D5A12	264P045040	DIODE - 1S24710M	
D5A13	264P045040	DIODE - 1S24710M	
D5A14	264P045040	DIODE - 1S24710M	
D5A33	264P669030	DIODE - S3L20U	
D5A34	264P483070	DIODE - RD5.1FB1	
D5A35	264P045040	DIODE - 1S24710M	
D5A36	264P045040	DIODE - 1S24710M	
D5A37	264P521040	DIODE - EU1A	
D5A51	**262P039010**	**DIODE - BYW96E/20**	
D5A52	**264P899010**	**DIODE - BYV26E**	
D5A53	264P489010	DIODE - RD16FB1	
D5A54	**264P622010**	**DIODE - AL01Z**	
D5A55	**264P622010**	**DIODE - AL01Z**	
D5A56	**264P045040**	**DIODE - 1S24710M**	
D5A57	**264P521040**	**DIODE - EU1A**	
D5A58	264P045040	DIODE - 1S24710M	
D5A60	**264P486050**	**DIODE - RD9.1FB2**	**8**
D5A60	**264P488030**	**DIODE - RD13FB2**	**1-7**
D5A61	**264P487090**	**DIODE - RD12FB3**	
D5H01	264P045040	DIODE - 1S24710M	
D5H02	264P045040	DIODE - 1S24710M	
D5K01	264P528030	DIODE - RP1H	
D5K02	264P543010	DIODE - EG01	
D5K03	264P543010	DIODE - EG01	
D5K10	264P528030	DIODE - RP1H	
D5K11	264P528030	DIODE - RP1H	
D6B00	262P063010	DIODE - 1SS244	
D6B07	262P063010	DIODE - 1SS244	
D6B08	262P063010	DIODE - 1SS244	
D6B10	264P501050	DIODE - HZ3BLL	
D6G00	262P063010	DIODE - 1SS244	
D6G07	262P063010	DIODE - 1SS244	
D6G08	262P063010	DIODE - 1SS244	
D6R00	262P063010	DIODE - 1SS244	
D6R07	262P063010	DIODE - 1SS244	
D6R08	262P063010	DIODE - 1SS244	
D7H00	264P828010	D-CHIP - DAN202U/MA142WK	
D7K21	268P100010	PHOTO DIODE - SFH235FA	578
D7K22	264P045040	DIODE - 1S24710M	578
D7L21	264P212020	D-LED - LN31GPH	
D8C01	264P045040	DIODE - 1S24710M	
D8C02	264P045040	DIODE - 1S24710M	
D8C03	264P486060	DIODE - RD9.1FB3	
D8C04	264P486060	DIODE - RD9.1FB3	
D9A01	**262P031010**	**DIODE - D6SB80**	
D9A20	264P825040	DIODE - ERA15-08	
D9A21	264P825040	DIODE - ERA15-08	
D9A24	264P045040	DIODE - 1S24710M	
D9A28	264P045040	DIODE - 1S24710M	
D9A29	264P484040	DIODE - RD5.6FB3	
D9A30	264P724010	DIODE - STF14	
D9A31	264P486020	DIODE - RD8.2FB3	
D9A50	264P045040	DIODE - 1S24710M	
D9A53	264P045040	DIODE - 1S24710M	
D9A54	264P045040	DIODE - 1S24710M	
D9A55	264P045040	DIODE - 1S24710M	
D9A56	264P566010	DIODE - FMP-G12S	

[#] Model Legend: (1) VS-50111,, (2) VS-60111, (3) WS-48311, (4) WS-55311, (5) WS-55411, (6) WS-65311, (7) WS-65411, (8) WS-73411

Ref #	Part #	Part Name & Description	[#]
D9A57	264P899010	DIODE - BYV26E	
D9A58	264P588010	DIODE - FML-G16S	
D9A60	264P566010	DIODE - FMP-G12S	
D9A61	264P669030	DIODE - S3L20U	
D9A66	264P045040	DIODE - 1S24710M	
D9A67	264P484040	DIODE - RD5.6FB3	
D9A68	264P469070	DIODE - EQA02-28A/RD27EB4	
D9A69	264P527020	DIODE - AK04	
D9B01	264P045040	DIODE - 1S24710M	
D9B02	264P045040	DIODE - 1S24710M	
D9B03	264P045040	DIODE - 1S24710M	
D9B04	264P880010	DIODE - RK46	
D9B05	264P880010	DIODE - RK46	
D9B07	264P484030	DIODE - RD5.6FB2	
		COILS	
L1A30	321C114010	COIL-RF - 2200MH-J	
L1A31	325C461030	COIL-PEAKING - 10MH-K	
L1B30	321C114010	COIL-RF - 2200MH-J	
L1B31	325C461030	COIL-PEAKING - 10MH-K	
L2K00	325C461030	COIL-PEAKING - 10MH-K	
L2K01	325C462080	COIL-PEAKING - 180MH-J	
L2K02	325C462080	COIL-PEAKING - 180MH-J	
L2K05	409P777080	EMI-F-CHIP - BLM21P221S	
L2L00	409P777080	EMI-F-CHIP - BLM21P221S	
L2L01	325C461030	COIL-PEAKING - 10MH-K	
L2L02	325C461030	COIL-PEAKING - 10MH-K	
L2LA0	409P777080	EMI-F-CHIP - BLM21P221S	
L2LA1	325C461030	COIL-PEAKING - 10MH-K	
L2LA2	325C461030	COIL-PEAKING - 10MH-K	
L2M00	409P777080	EMI-F-CHIP - BLM21P221S	
L2M01	409P777080	EMI-F-CHIP - BLM21P221S	
L2M32	409P777080	EMI-F-CHIP - BLM21P221S	
L2M50	325C461050	COIL-PEAKING - 15MH-K	
L2M93	409P777080	EMI-F-CHIP - BLM21P221S	
L2MA0	325C461050	COIL-PEAKING - 15MH-K	
L2MA1	325C461030	COIL-PEAKING - 10MH-K	
L2MD1	325C461030	COIL-PEAKING - 10MH-K	
L2N00	325C461030	COIL-PEAKING - 10MH-K	
L2NA1	325C461030	COIL-PEAKING - 10MH-K	
L2NA2	325C461030	COIL-PEAKING - 10MH-K	
L2NC0	325C461030	COIL-PEAKING - 10MH-K	
L2NC1	325C461030	COIL-PEAKING - 10MH-K	
L2P00	325C461030	COIL-PEAKING - 10MH-K	
L2P01	325C461030	COIL-PEAKING - 10MH-K	
L2S00	325C461030	COIL-PEAKING - 10MH-K	
L2V19	325C461010	COIL-PEAKING - 6.8MH-K	
L2V55	325C461010	COIL-PEAKING - 6.8MH-K	
L2V61	325C461010	COIL-PEAKING - 6.8MH-K	
L2W02	409P923060	EMI-F-CHIP - BLM21B272S	
L2W03	409P923060	EMI-F-CHIP - BLM21B272S	
L2W04	409P923060	EMI-F-CHIP - BLM21B272S	
L3A10	409P923060	EMI-F-CHIP - BLM21B272S	
L3A49	409P923060	EMI-F-CHIP - BLM21B272S	
L3K00	325C461030	COIL-PEAKING - 10MH-K	
L4B01	321C130010	COIL-RF - 2MH	
L4B02	321C130090	COIL-RF - 10MH-K	
L5A22	333P059020	COIL-HORIZ-LIN	
L5A34	321C130010	COIL-RF - 2MH	
L5A51	321C151040	COIL-RF - 12MH-K	

Ref #	Part #	Part Name & Description	[#]
L5A54	411D009020	CORE-FERRITE	
L6R04	321C141010	COIL-RF - 6.8MH-M	
L7A16	409P777050	EMI-F-CHIP - BLM21B201S	
L7A62	409P777050	EMI-F-CHIP - BLM21B201S	
L7A99	409P777050	EMI-F-CHIP - BLM21B201S	
L7C21	409P777050	EMI-F-CHIP - BLM21B201S	
L7C22	409P777050	EMI-F-CHIP - BLM21B201S	
L7C23	409P777050	EMI-F-CHIP - BLM21B201S	
L7C24	409P777050	EMI-F-CHIP - BLM21B201S	
L7D00	409P777020	EMI-F-CHIP - BLM21A05	
L7D01	409P777020	EMI-F-CHIP - BLM21A05	
L7D03	409P777080	EMI-F-CHIP - BLM21P221S	
L7D04	409P777080	EMI-F-CHIP - BLM21P221S	
L7D11	325C241030	COIL-CHIP - 10MH-K	
L7D12	409P777020	EMI-F-CHIP - BLM21A05	
L7D13	325C241030	COIL-CHIP - 10MH-K	
L7D14	409P777020	EMI-F-CHIP - BLM21A05	
L7D15	325C241030	COIL-CHIP - 10MH-K	
L7E00	409P777020	EMI-F-CHIP - BLM21A05	
L7E01	409P777020	EMI-F-CHIP - BLM21A05	
L7E11	325C241030	COIL-CHIP - 10MH-K	
L7E12	409P777020	EMI-F-CHIP - BLM21A05	
L7E13	325C241030	COIL-CHIP - 10MH-K	
L7E14	409P777020	EMI-F-CHIP - BLM21A05	
L7E15	325C241030	COIL-CHIP - 10MH-K	
L7G00	325C242050	COIL-CHIP - 100MH-K	
L7G10	325C242050	COIL-CHIP - 100MH-K	
L7G11	325C241030	COIL-CHIP - 10MH-K	
L7H00	409P777080	EMI-F-CHIP - BLM21P221S	
L7H02	409P777080	EMI-F-CHIP - BLM21P221S	
L7H03	409P777080	EMI-F-CHIP - BLM21P221S	
L7H04	409P777080	EMI-F-CHIP - BLM21P221S	
L7H05	409P777080	EMI-F-CHIP - BLM21P221S	
L7H06	409P777080	EMI-F-CHIP - BLM21P221S	
L7H07	409P777080	EMI-F-CHIP - BLM21P221S	
L7H08	325C241030	COIL-CHIP - 10MH-K	
L7H09	409P777080	EMI-F-CHIP - BLM21P221S	
L7H10	325C241030	COIL-CHIP - 10MH-K	
L7H11	409P777080	EMI-F-CHIP - BLM21P221S	
L7H12	409P777080	EMI-F-CHIP - BLM21P221S	
L7H13	409P777080	EMI-F-CHIP - BLM21P221S	
L7H14	409P777080	EMI-F-CHIP - BLM21P221S	
L7H15	409P777080	EMI-F-CHIP - BLM21P221S	
L7H16	409P777080	EMI-F-CHIP - BLM21P221S	
L7HA0	409P777080	EMI-F-CHIP - BLM21P221S	
L7HA1	409P777080	EMI-F-CHIP - BLM21P221S	
L7HA2	409P777080	EMI-F-CHIP - BLM21P221S	
L7HA3	409P777080	EMI-F-CHIP - BLM21P221S	
L7HA4	409P777080	EMI-F-CHIP - BLM21P221S	
L7HA5	409P777080	EMI-F-CHIP - BLM21P221S	
L7HA6	409P777080	EMI-F-CHIP - BLM21P221S	
L7HA7	409P777080	EMI-F-CHIP - BLM21P221S	
L7HA8	409P777080	EMI-F-CHIP - BLM21P221S	
L7HA9	409P777080	EMI-F-CHIP - BLM21P221S	
L7HB0	409P777080	EMI-F-CHIP - BLM21P221S	
L7HB1	409P777080	EMI-F-CHIP - BLM21P221S	
L7HB2	409P777080	EMI-F-CHIP - BLM21P221S	
L7HB3	409P777080	EMI-F-CHIP - BLM21P221S	
L7HB4	409P777080	EMI-F-CHIP - BLM21P221S	
L7HD0	409P777080	EMI-F-CHIP - BLM21P221S	

[#] Model Legend: (1) VS-50111,, (2) VS-60111, (3) WS-48311, (4) WS-55311, (5) WS-55411, (6) WS-65311, (7) WS-65411, (8) WS-73411

Ref #	Part #	Part Name & Description	[#]
L7HD1	409P777080	EMI-F-CHIP - BLM21P221S	
L7HD2	409P777080	EMI-F-CHIP - BLM21P221S	
L7HD3	409P777080	EMI-F-CHIP - BLM21P221S	
L7HD4	409P777080	EMI-F-CHIP - BLM21P221S	
L7HD5	409P777080	EMI-F-CHIP - BLM21P221S	
L7HD6	409P777080	EMI-F-CHIP - BLM21P221S	
L7HD7	409P777080	EMI-F-CHIP - BLM21P221S	
L7K01	325C121030	COIL-PEAKING - 10MH-K	
L8C01	321C141070	COIL-RF - 22MH-K	
L8C02	321C141070	COIL-RF - 22MH-K	
L8C03	321C141070	COIL-RF - 22MH-K	
L8C04	321C141070	COIL-RF - 22MH-K	
L8D01	409P777080	EMI-F-CHIP - BLM21P221S	
L8D02	409P777080	EMI-F-CHIP - BLM21P221S	
L8D03	409P777080	EMI-F-CHIP - BLM21P221S	
L8D04	409P777080	EMI-F-CHIP - BLM21P221S	
L8D05	409P777080	EMI-F-CHIP - BLM21P221S	
L8D06	409P777080	EMI-F-CHIP - BLM21P221S	
L8D07	409P777080	EMI-F-CHIP - BLM21P221S	
L8G00	409P777080	EMI-F-CHIP - BLM21P221S	
L8G01	409P777080	EMI-F-CHIP - BLM21P221S	
L9A20	321C141070	COIL-RF - 22MH-K	
L9A50	411D009020	CORE-FERRITE	
L9A52	411D009020	CORE-FERRITE	
L9A53	321C141010	COIL-RF - 6.8MH-M	
L9A54	411D009020	CORE-FERRITE	
L9A55	321C142030	COIL-RF - 68MH-K	
L9A56	411D009020	CORE-FERRITE	
L9A57	321C141070	COIL-RF - 22MH-K	
L9A62	321C141010	COIL-RF - 6.8MH-M	
L9B01	**351P226010**	**COIL-CHOKE - 150UH**	
L9B02	321C141070	COIL-RF - 22MH-K	
L9B03	321C141070	COIL-RF - 22MH-K	
L9B04	**351P226010**	**COIL-CHOKE - 150UH**	
L9B05	321C141030	COIL-RF - 10MH-K	
L9D00	**351P222010**	**LINE FILTER - ELF24V050A**	
L9D01	**351P222010**	**LINE FILTER - ELF24V050A**	
L9D02	**351P223010**	**LINE FILTER - SLF15N0601**	
LC2K01	409P777020	EMI-F-CHIP - BLM21A05	
LC2K02	409P777020	EMI-F-CHIP - BLM21A05	
LC2K03	409P777020	EMI-F-CHIP - BLM21A05	
LC2KOO	409P777020	EMI-F-CHIP - BLM21A05	
LC3K00	409P777020	EMI-F-CHIP - BLM21A05	
LC3K01	409P777020	EMI-F-CHIP - BLM21A05	
LC7D02	409P875090	EMI-F-CHIP - ELKE103FA	
LC7D05	409P875090	EMI-F-CHIP - ELKE103FA	
LC7D10	409P876020	EMI-F-CHIP - CNF20C470S/CKD510JB1H470S	
LC7D11	409P876020	EMI-F-CHIP - CNF20C470S/CKD510JB1H470S	
LC7D12	409P876020	EMI-F-CHIP - CNF20C470S/CKD510JB1H470S	
LC7D13	409P876020	EMI-F-CHIP - CNF20C470S/CKD510JB1H470S	
LC7D14	409P876020	EMI-F-CHIP - CNF20C470S/CKD510JB1H470S	
LC7E10	409P876020	EMI-F-CHIP - CNF20C470S/CKD510JB1H470S	
LC7E11	409P876020	EMI-F-CHIP - CNF20C470S/CKD510JB1H470S	
LC7E12	409P876020	EMI-F-CHIP - CNF20C470S/CKD510JB1H470S	
LC7E13	409P876020	EMI-F-CHIP - CNF20C470S/CKD510JB1H470S	
LC7E14	409P876020	EMI-F-CHIP - CNF20C470S/CKD510JB1H470S	
LC7G01	409P876020	EMI-F-CHIP - CNF20C470S/CKD510JB1H470S	
LC7G02	409P876020	EMI-F-CHIP - CNF20C470S/CKD510JB1H470S	
LC7G03	409P876020	EMI-F-CHIP - CNF20C470S/CKD510JB1H470S	
LC7G04	409P876020	EMI-F-CHIP - CNF20C470S/CKD510JB1H470S	
LC7G05	409P876020	EMI-F-CHIP - CNF20C470S/CKD510JB1H470S	
LC7G06	409P876020	EMI-F-CHIP - CNF20C470S/CKD510JB1H470S	
LC7G07	409P875090	EMI-F-CHIP - ELKE103FA	
LC7G08	409P875090	EMI-F-CHIP - ELKE103FA	
LC7G09	409P876020	EMI-F-CHIP - CNF20C470S/CKD510JB1H470S	
LC7G10	409P876020	EMI-F-CHIP - CNF20C470S/CKD510JB1H470S	
LC7G11	409P876020	EMI-F-CHIP - CNF20C470S/CKD510JB1H470S	
LC7G12	409P876020	EMI-F-CHIP - CNF20C470S/CKD510JB1H470S	
LC7G13	409P876020	EMI-F-CHIP - CNF20C470S/CKD510JB1H470S	
LF7D00	409P901010	LP-FILTER - 14MHZ SMD	
LF7D01	409P901010	LP-FILTER - 14MHZ SMD	
LF7D02	409P901010	LP-FILTER - 14MHZ SMD	
LF7E00	409P901010	LP-FILTER - 14MHZ SMD	
LF7E01	409P901010	LP-FILTER - 14MHZ SMD	
LF7E02	409P901010	LP-FILTER - 14MHZ SMD	
LF7G00	409P901010	LP-FILTER - 14MHZ SMD	
LF7G01	409P901010	LP-FILTER - 14MHZ SMD	
LF7G02	409P901010	LP-FILTER - 14MHZ SMD	

TRANSFORMERS

T5A31	**349P216010**	**TRANS-HORIZ**
T5A32	**336P040010**	**TRANS-HORIZ-DRIVE**
T5A51	**334P281010**	**TRANS-FLYBACK**
T9A20	**350P796010**	**TRANS-POWER**
T9A50	**350P795010**	**TRANS-POWER**

VARIABLE RESISTORS

	129P059050	VR-FOCUS - MHF116-50W
RV9D00	**265P100020**	**VARISTOR - ERZV10D271CS**

RESISTORS

CHIP Type Resistors (Listed by Value)

Value	Part No.	Value	Part No.
1/16W 0OHM	103P509050	1/16W 2.2K-J	103P502090
1/16W 22-J	103P500050	1/16W 2.7K-J	103P503000
1/8W 27-J	103P400060	1/16W 3K-F	103P493060
1/16W 33-J	103P500070	1/16W 3.3K-F	103P493070
1/16W 47-J	103P500090	1/16W 3.3K-J	103P503010
1/16W 56-J	103P501000	1/16W 3.9K-F	103P493090
1/16W 82-J	103P501020	1/16W 3.9K-J	103P503020
1/16W 100-J	103P501030	1/16W 4.7K-F	103P494010
1/8W 100-J	103P401030	1/16W 4.7K-J	103P503030
1/16W 120-J	103P501040	1/16W 5.1K-F	103P494020
1/16W 180-J	103P501060	1/16W 5.6K-J	103P503040
1/16W 220-J	103P501070	1/16W 6.8K-F	103P494050
1/16W 240-F	103P491000	1/16W 6.8K-J	103P503050
1/8W 270-J	103P401080	1/16W 8.2K-J	103P503060
1/16W 330-F	103P491030	1/16W 10K-F	103P494090
1/16W 330-J	103P501090	1/16W 10K-J	103P503070
1/16W 390-F	103P491050	1/16W 12K-J	103P503080
1/16W 390-J	103P502000	1/16W 15K-J	103P503090
1/16W 470-J	103P502010	1/16W 18K-J	103P504000
1/16W 560-J	103P502020	1/16W 22K-J	103P504010
1/16W 620-F	103P492000	1/16W 27K-J	103P504020
1/16W 680-F	103P492010	1/16W 33K-J	103P504030
1/16W 680-J	103P502030	1/16W 47K-J	103P504050
1/16W 820-F	103P492030	1/16W 56K-J	103P504060
1/16W 820-J	103P502040	1/16W 62K-F	103P496080

[#] Model Legend: (1) VS-50111,, (2) VS-60111, (3) WS-48311, (4) WS-55311, (5) WS-55411, (6) WS-65311, (7) WS-65411, (8) WS-73411

Ref #	Part #	Part Name & Description	[#]

Value	Part No.	Value	Part No.
1/16W 1K-J	103P502050	1/16W 68K-F	103P496090
1/8W 1K-J	103P402050	1/16W 68K-J	103P504070
1/16W 1.1K-F	103P492060	1/16W 75K-J	103P509090
1/16W 1.2K-J	103P502060	1/16W 82K-J	103P504080
1/16W 1.3K-F	103P492080	1/16W 100K-J	103P504090
1/16W 1.5K-F	103P492090	1/16W 120K-J	103P505000
1/16W 1.5K-J	103P502070	1/16W 330K-J	103P505050
1/8W 1.5K-J	103P402070	1/16W 680K-J	103P505090
1/16W 1.8K-J	103P502080	1/16W 820K-J	103P506000
1/16W 2K-F	103P493020	1/16W 1M-J	103P506010
1/16W 2.2K-F	103P493030	1/16W 3.3M-J	103P506070

Conventional Resistors (By Ref #)

Ref #	Part #	Part Name & Description	[#]
R3E02	103P712080	R-CARBON - 1/4W 1.8K-J	
R3E04	103P712080	R-CARBON - 1/4W 1.8K-J	
R3E05	103P714060	R-CARBON - 1/4W 56K-J	
R3E06	103P714010	R-CARBON - 1/4W 22K-J	
R3E09	109D151010	R-CARBON - 1/4W 2.2-J	
R3E11	109D151010	R-CARBON - 1/4W 2.2-J	
R3E12	109D151010	R-CARBON - 1/4W 2.2-J	
R3E14	109D151010	R-CARBON - 1/4W 2.2-J	
R3E15	103P713050	R-CARBON - 1/4W 6.8K-J	3-8
R3E15	103P713070	R-CARBON - 1/4W 10K-J	1&2
R3E16	103P713050	R-CARBON - 1/4W 6.8K-J	3-8
R3E16	103P713070	R-CARBON - 1/4W 10K-J	1&2
R4B03	103P713090	R-CARBON - 1/4W 15K-J	
R4B10	103C188030	R-METAL - 2W 1.8-J	1&2
R4B10	103C188040	R-METAL - 2W 2.2-J	3-8
R4B12	103C188030	R-METAL - 2W 1.8-J	1&2
R4B12	103C188040	R-METAL - 2W 2.2-J	3-8
R4B16	109P095010	R-METAL-LIN - 1/4W 5.1K-J	1-4
R4B17	103P711090	R-CARBON - 1/4W 330-J	
R4B18	103P338020	R-CARBON-25 - 1/4W 1.5-J	
R4B23	103P411070	R-CARBON - 1/4W 220-J	
R4B24	103P712050	R-CARBON - 1/4W 1K-J	
R4B25	103P712050	R-CARBON - 1/4W 1K-J	
R4B26	103P713030	R-CARBON - 1/4W 4.7K-J	
R5A00	**103P711030**	**R-CARBON - 1/4W 100-J**	
R5A01	103P713010	R-CARBON - 1/4W 3.3K-J	
R5A02	103P711030	R-CARBON - 1/4W 100-J	
R5A03	103P713010	R-CARBON - 1/4W 3.3K-J	
R5A04	103P462040	R-METAL - 1/4W 910-F	
R5A05	103P713010	R-CARBON - 1/4W 3.3K-J	
R5A06	103P712050	R-CARBON - 1/4W 1K-J	
R5A07	103P714080	R-CARBON - 1/4W 82K-J	
R5A08	103P714050	R-CARBON - 1/4W 47K-J	
R5A09	103P714040	R-CARBON - 1/4W 39K-J	
R5A10	103P714040	R-CARBON - 1/4W 39K-J	
R5A11	103P713070	R-CARBON - 1/4W 10K-J	
R5A12	103P712050	R-CARBON - 1/4W 1K-J	
R5A13	103P464020	R-METAL - 1/4W 2.4K-F	
R5A14	103P464030	R-METAL - 1/4W 5.6K-F	
R5A15	103P713030	R-CARBON - 1/4W 4.7K-J	
R5A16	103P714010	R-CARBON - 1/4W 22K-J	
R5A17	103P712050	R-CARBON - 1/4W 1K-J	
R5A18	103P712050	R-CARBON - 1/4W 1K-J	
R5A19	103P712010	R-CARBON - 1/4W 470-J	
R5A20	103P714050	R-CARBON - 1/4W 47K-J	
R5A21	103P713030	R-CARBON - 1/4W 4.7K-J	
R5A22	103P714010	R-CARBON - 1/4W 22K-J	
R5A23	103P713070	R-CARBON - 1/4W 10K-J	
R5A24	103P714070	R-CARBON - 1/4W 68K-J	
R5A25	103P464030	R-METAL - 1/4W 5.6K-F	
R5A26	103P464030	R-METAL - 1/4W 5.6K-F	
R5A27	103P713070	R-CARBON - 1/4W 10K-J	
R5A28	103P715010	R-CARBON - 1/4W 150K-J	
R5A29	103P714040	R-CARBON - 1/4W 39K-J	
R5A30	103P714040	R-CARBON - 1/4W 39K-J	
R5A31	103P712080	R-CARBON - 1/4W 1.8K-J	
R5A32	103P713070	R-CARBON - 1/4W 10K-J	
R5A33	103P463060	R-METAL - 1/4W 3K-F	
R5A34	103P711000	R-CARBON - 1/4W 56-J	
R5A35	103P142010	R-CARBON - 1/2W 470-J	
R5A36	103C393010	R-METAL-P - 3W 3.3K-J	5-8
R5A36	103C393040	R-METAL-P - 3W 5.6K-J	1-4
R5A37	103C393010	R-METAL-P - 3W 3.3K-J	5-8
R5A37	103C393040	R-METAL-P - 3W 5.6K-J	1-4
R5A38	103C197040	R-METAL - 3W 0.33-J	
R5A39	103P140090	R-CARBON - 1/2W 47-J	
R5A40	103P714090	R-CARBON - 1/4W 100K-J	
R5A41	103P715020	R-CARBON - 1/4W 180K-J	
R5A42	103P713070	R-CARBON - 1/4W 10K-J	
R5A43	103P714010	R-CARBON - 1/4W 22K-J	
R5A44	103P712090	R-CARBON - 1/4W 2.2K-J	
R5A45	103P143050	R-CARBON - 1/2W 6.8K-J	
R5A46	103C391050	R-METAL-P - 3W 150-J	
R5A47	103P714080	R-CARBON - 1/4W 82K-J	
R5A48	103P714050	R-CARBON - 1/4W 47K-J	
R5A49	103P711030	R-CARBON - 1/4W 100-J	
R5A50	103P714050	R-CARBON - 1/4W 47K-J	
R5A51	103P712050	R-CARBON - 1/4W 1K-J	
R5A52	103P713010	R-CARBON - 1/4W 3.3K-J	
R5A53	103P713070	R-CARBON - 1/4W 10K-J	
R5A54	103P714010	R-CARBON - 1/4W 22K-J	
R5A55	103P143050	R-CARBON - 1/2W 6.8K-J	
R5A56	**103P715060**	**R-CARBON - 1/4W 390K-J**	
R5A57	103P711030	R-CARBON - 1/4W 100-J	
R5A58	**103P464080**	**R-METAL - 1/4W 9.1K-F**	
R5A59	**103P461070**	**R-METAL - 1/4W 470-F**	
R5A60	103P464000	R-METAL - 1/4W 4.3K-F	
R5A62	103P711070	R-CARBON - 1/4W 220-J	
R5A63	103P466080	R-METAL - 1/4W 62K-F	
R5A64	103P712010	R-CARBON - 1/4W 470-J	
R5A65	**103P141030**	**R-CARBON - 1/2W 100-J**	
R5A66	**103P466010**	**R-METAL - 1/4W 33K-F**	
R5A68	**103P463020**	**R-METAL - 1/4W 2K-F**	**8**
R5A68	**103P463050**	**R-METAL - 1/4W 2.7K-F**	**1-7**
R5A69	**103P461090**	**R-METAL - 1/4W 560-F**	**8**
R5A69	**103P462010**	**R-METAL - 1/4W 680-F**	**1-7**
R5A70	**103P463040**	**R-METAL - 1/4W 2.4K-F**	**8**
R5A71	**103P713070**	**R-CARBON - 1/4W 10K-J**	
R5A72	**103P463050**	**R-METAL - 1/4W 2.7K-F**	
R5A73	**103P714050**	**R-CARBON - 1/4W 47K-J**	
R5A74	**103P713070**	**R-CARBON - 1/4W 10K-J**	
R5A75	**103P713070**	**R-CARBON - 1/4W 10K-J**	
R5A76	**103P713070**	**R-CARBON - 1/4W 10K-J**	
R5A77	103P711090	R-CARBON - 1/4W 330-J	
R5A78	**103P714010**	**R-CARBON - 1/4W 22K-J**	

[#] Model Legend: (1) VS-50111,, (2) VS-60111, (3) WS-48311, (4) WS-55311, (5) WS-55411, (6) WS-65311, (7) WS-65411, (8) WS-73411

Ref #	Part #	Part Name & Description	[#]
R5A79	**103P713030**	**R-CARBON - 1/4W 4.7K-J**	
R5A80	102P106090	R-WIRE - 2W 0.12-K	
R5A81	103P711030	R-CARBON - 1/4W 100-J	
R5A82	**103P370090**	**R-FUSE - 1/4W 47-J**	
R5A83	**103P464070**	**R-METAL - 1/4W 8.2K-F**	
R5A84	**103P464070**	**R-METAL - 1/4W 8.2K-F**	
R5A85	103P710070	R-CARBON - 1/4W 33-J	
R5A86	103P142060	R-CARBON - 1/2W 1.2K-J	
R5A87	103P711030	R-CARBON - 1/4W 100-J	
R5A88	103P464000	R-METAL - 1/4W 4.3K-F	
R5A89	103P463050	R-METAL - 1/4W 2.7K-F	
R5A90	**103P711060**	**R-CARBON - 1/4W 180-J**	
R5A91	103P467030	R-METAL - 1/4W 100K-F	
R5A92	103P465070	R-METAL - 1/4W 22K-F	
R5A93	**103P140090**	**R-CARBON - 1/2W 47-J**	
R5A94	103C390070	R-METAL-P - 3W 33-J	
R5A95	**103P714030**	**R-CARBON - 1/4W 33K-J**	
R5A96	103P466080	R-METAL - 1/4W 62K-F	
R5A97	103P142040	R-CARBON - 1/2W 820-J	
R5A98	103C198010	R-METAL - 3W 1.2-J	
R5A99	103P714090	R-CARBON - 1/4W 100K-J	
R5B01	103P714030	R-CARBON - 1/4W 33K-J	
R5B02	103P714090	R-CARBON - 1/4W 100K-J	
R5B03	103P712060	R-CARBON - 1/4W 1.2K-J	
R5B04	103P711030	R-CARBON - 1/4W 100-J	
R5H01	103P712050	R-CARBON - 1/4W 1K-J	
R5H02	103P758000	R-FUSE - 1/4W 1-J	
R5H03	103P714030	R-CARBON - 1/4W 33K-J	
R5H04	103P463060	R-METAL - 1/4W 3K-F	
R5H07	103P461060	R-METAL - 1/4W 430-F	
R5H08	103P711030	R-CARBON - 1/4W 100-J	
R5H09	103P711010	R-CARBON - 1/4W 68-J	
R5H10	103P710090	R-CARBON - 1/4W 47-J	
R5H11	103P712020	R-CARBON - 1/4W 560-J	
R5H12	103P712020	R-CARBON - 1/4W 560-J	
R5H13	103P712020	R-CARBON - 1/4W 560-J	
R5H14	103P710090	R-CARBON - 1/4W 47-J	
R5H15	103P710090	R-CARBON - 1/4W 47-J	
R5H16	103P710020	R-CARBON - 1/4W 12-J	
R5H17	103P710020	R-CARBON - 1/4W 12-J	
R5H22	103P711030	R-CARBON - 1/4W 100-J	
R5H23	103P713010	R-CARBON - 1/4W 3.3K-J	
R5H47	**103C171040**	**R-METAL - 1W 120-J**	
R5H48	103P712060	R-CARBON - 1/4W 1.2K-J	
R5H49	103P714070	R-CARBON - 1/4W 68K-J	
R5H50	103P714070	R-CARBON - 1/4W 68K-J	
R5H51	103P712060	R-CARBON - 1/4W 1.2K-J	
R5H58	103P148000	R-CARBON - 1/2W 1-J	
R5H59	103C191050	R-METAL - 3W 150-J	
R5H60	103C178080	R-METAL - 1W 4.7-J	
R5H67	103P148000	R-CARBON - 1/2W 1-J	
R5K01	109D031070	R-COMPOSITION - 1/2W 10K-K	
R5K02	103P412050	R-CARBON - 1/4W 1K-J	
R5K03	103P145000	R-CARBON - 1/2W 120K-J	
R5K04	103P144090	R-CARBON - 1/2W 100K-J	
R5K05	103P145000	R-CARBON - 1/2W 120K-J	
R5K06	103P144090	R-CARBON - 1/2W 100K-J	
R5K07	103P145000	R-CARBON - 1/2W 120K-J	
R5K08	103P144090	R-CARBON - 1/2W 100K-J	
R5K09	**103P762020**	**R-FUSE - 1/2W 560-J**	
R5K10	103P711010	R-CARBON - 1/4W 68-J	
R5K11	103P711090	R-CARBON - 1/4W 330-J	
R5K12	**103P760060**	**R-FUSE - 1/2W 27-J**	
R5K20	103P463060	R-METAL - 1/4W 3K-F	
R5K22	103P145050	R-CARBON - 1/2W 330K-J	
R5K23	103P145050	R-CARBON - 1/2W 330K-J	
R5K24	103P145050	R-CARBON - 1/2W 330K-J	
R5K25	103P713040	R-CARBON - 1/4W 5.6K-J	
R5K31	103P711030	R-CARBON - 1/4W 100-J	
R5K34	**103P760060**	**R-FUSE - 1/2W 27-J**	
R5K46	103P712010	R-CARBON - 1/4W 470-J	
R5K50	**103P762050**	**R-FUSE - 1/2W 1K-J**	
R6B01	103P711030	R-CARBON - 1/4W 100-J	
R6B02	103P713090	R-CARBON - 1/4W 15K-J	
R6B03	103P464020	R-METAL - 1/4W 2.4K-F	
R6B04	103P713000	R-CARBON - 1/4W 2.7K-J	
R6B06	103P462050	R-METAL - 1/4W 1K-F	
R6B07	103P711030	R-CARBON - 1/4W 100-J	
R6B08	103P710010	R-CARBON - 1/4W 10-J	
R6B09	103P711030	R-CARBON - 1/4W 100-J	
R6B10	103P713030	R-CARBON - 1/4W 4.7K-J	
R6B11	**103C194020**	**R-METAL - 3W 27K-J**	
D6B11	103P712060	R-CARBON - 1/4W 1.2K-J	
D6G11	103P712060	R-CARBON - 1/4W 1.2K-J	
D6R11	103P712060	R-CARBON - 1/4W 1.2K-J	
R6B12	103P712030	R-CARBON - 1/4W 680-J	
R6B13	103P331030	R-CARBON-25 - 1/4W 100-J	
R6B15	103P714090	R-CARBON - 1/4W 100K-J	
R6B16	103P411000	R-CARBON - 1/4W 56-J	
R6B17	101P221030	R-COMPOSITION - 1/2W 220-K	
R6B18	103P713040	R-CARBON - 1/4W 5.6K-J	
R6B19	103P713050	R-CARBON - 1/4W 6.8K-J	
R6B20	101P221030	R-COMPOSITION - 1/2W 220-K	
R6B21	103P467030	R-METAL - 1/4W 100K-F	
R6B22	103P467030	R-METAL - 1/4W 100K-F	
R6B23	103P711030	R-CARBON - 1/4W 100-J	
R6B24	103P713030	R-CARBON - 1/4W 4.7K-J	
R6B25	103P711030	R-CARBON - 1/4W 100-J	
R6B26	103P413050	R-CARBON - 1/4W 6.8K-J	
R6B27	103P711030	R-CARBON - 1/4W 100-J	
R6G01	103P711030	R-CARBON - 1/4W 100-J	
R6G02	103P713090	R-CARBON - 1/4W 15K-J	
R6G03	103P464020	R-METAL - 1/4W 2.4K-F	
R6G04	103P463040	R-METAL - 1/4W 2.4K-F	
R6G06	103P462030	R-METAL - 1/4W 820-F	
R6G07	103P711030	R-CARBON - 1/4W 100-J	
R6G08	103P710010	R-CARBON - 1/4W 10-J	
R6G09	103P711030	R-CARBON - 1/4W 100-J	
R6G10	103P713030	R-CARBON - 1/4W 4.7K-J	
R6G11	**103C194020**	**R-METAL - 3W 27K-J**	
R6G13	103P331030	R-CARBON-25 - 1/4W 100-J	
R6G15	103P714090	R-CARBON - 1/4W 100K-J	
R6G16	103P411000	R-CARBON - 1/4W 56-J	
R6G17	101P221030	R-COMPOSITION - 1/2W 220-K	
R6G20	101P221030	R-COMPOSITION - 1/2W 220-K	
R6G21	103P467010	R-METAL - 1/4W 82K-F	
R6G22	103P467010	R-METAL - 1/4W 82K-F	
R6G23	103P711030	R-CARBON - 1/4W 100-J	
R6R01	103P711030	R-CARBON - 1/4W 100-J	
R6R02	103P713090	R-CARBON - 1/4W 15K-J	

[#] Model Legend: (1) VS-50111,, (2) VS-60111, (3) WS-48311, (4) WS-55311, (5) WS-55411, (6) WS-65311, (7) WS-65411, (8) WS-73411

Ref #	Part #	Part Name & Description	[#]
R6R03	103P464020	R-METAL - 1/4W 2.4K-F	
R6R04	103P713000	R-CARBON - 1/4W 2.7K-J	
R6R06	103P462050	R-METAL - 1/4W 1K-F	
R6R07	103P711030	R-CARBON - 1/4W 100-J	
R6R08	103P710010	R-CARBON - 1/4W 10-J	
R6R09	103P711030	R-CARBON - 1/4W 100-J	
R6R10	103P713030	R-CARBON - 1/4W 4.7K-J	
R6R11	**103C194020**	**R-METAL - 3W 27K-J**	
R6R13	103P331030	R-CARBON-25 - 1/4W 100-J	
R6R15	103P714090	R-CARBON - 1/4W 100K-J	
R6R16	103P411000	R-CARBON - 1/4W 56-J	
R6R17	101P221030	R-COMPOSITION - 1/2W 220-K	
R6R20	101P221030	R-COMPOSITION - 1/2W 220-K	
R6R21	103P467030	R-METAL - 1/4W 100K-F	
R6R22	103P467030	R-METAL - 1/4W 100K-F	
R6R23	103P711030	R-CARBON - 1/4W 100-J	
R7B05	103C178010	R-METAL - 1W 1.2-J	578
R7B08	109D151010	R-CARBON - 1/4W 2.2-J	578
R7K01	103P712050	R-CARBON - 1/4W 1K-J	
R7K02	103P713010	R-CARBON - 1/4W 3.3K-J	
R7K21	103P710090	R-CARBON - 1/4W 47-J	578
R7K22	103P715030	R-CARBON - 1/4W 220K-J	578
R7K23	103P712050	R-CARBON - 1/4W 1K-J	578
R7K24	103P713080	R-CARBON - 1/4W 12K-J	578
R7K25	103P712050	R-CARBON - 1/4W 1K-J	578
R7K26	103P715030	R-CARBON - 1/4W 220K-J	578
R7K27	103P713070	R-CARBON - 1/4W 10K-J	578
R7K28	103P711050	R-CARBON - 1/4W 150-J	578
R7K29	103P712060	R-CARBON - 1/4W 1.2K-J	578
R7K30	103P712050	R-CARBON - 1/4W 1K-J	578
R7K31	103P715030	R-CARBON - 1/4W 220K-J	578
R7K32	103P713030	R-CARBON - 1/4W 4.7K-J	578
R7K33	103P712050	R-CARBON - 1/4W 1K-J	578
R7K34	103P713000	R-CARBON - 1/4W 2.7K-J	578
R7K35	103P711030	R-CARBON - 1/4W 100-J	578
R7K36	103P710090	R-CARBON - 1/4W 47-J	578
R7L26	103P462090	R-METAL - 1/4W 1.5K-F	
R7L29	103P464030	R-METAL - 1/4W 5.6K-F	
R7L31	103P466010	R-METAL - 1/4W 33K-F	
R7L32	103P466070	R-METAL - 1/4W 56K-F	
R8C03	103P711090	R-CARBON - 1/4W 330-J	
R8C07	103C391050	R-METAL-P - 3W 150-J	
R8C08	103P714010	R-CARBON - 1/4W 22K-J	
R8C11	103P711090	R-CARBON - 1/4W 330-J	
R8C15	103C391050	R-METAL-P - 3W 150-J	
R8C19	103P711090	R-CARBON - 1/4W 330-J	
R8C23	103C391050	R-METAL-P - 3W 150-J	
R8C27	103P711090	R-CARBON - 1/4W 330-J	
R8C31	103C391050	R-METAL-P - 3W 150-J	
R8C35	103P711090	R-CARBON - 1/4W 330-J	
R8C39	103C391050	R-METAL-P - 3W 150-J	
R8C43	103P711090	R-CARBON - 1/4W 330-J	
R8C47	103C391050	R-METAL-P - 3W 150-J	
R8C60	103C191090	R-METAL - 3W 330-J	
R8C61	103C191090	R-METAL - 3W 330-J	
R8C62	103P713010	R-CARBON - 1/4W 3.3K-J	
R8C63	103P713010	R-CARBON - 1/4W 3.3K-J	
R8C64	103P713010	R-CARBON - 1/4W 3.3K-J	
R8C65	103P713010	R-CARBON - 1/4W 3.3K-J	
R8C66	103P713010	R-CARBON - 1/4W 3.3K-J	
R8C67	103P713010	R-CARBON - 1/4W 3.3K-J	
R8C69	103P714010	R-CARBON - 1/4W 22K-J	
R8P03	103P711070	R-CARBON - 1/4W 220-J	3&4
R8P03	103P712010	R-CARBON - 1/4W 470-J	5-7
R8P03	103P712050	R-CARBON - 1/4W 1K-J	1&2
R8P03	103P712080	R-CARBON - 1/4W 1.8K-J	8
R8P04	103P711070	R-CARBON - 1/4W 220-J	
R8P05	103P711070	R-CARBON - 1/4W 220-J	3-7
R8P05	103P712010	R-CARBON - 1/4W 470-J	1&2
R8P05	103P712050	R-CARBON - 1/4W 1K-J	8
R8P06	103P711070	R-CARBON - 1/4W 220-J	
R9A02	102P084000	R-CEMENT-WIRE - 15W 2.2-K	
R9A03	**109C010010**	**R-COMPOSITION - 1/2W 1M-K**	
R9A05	**109C010010**	**R-COMPOSITION - 1/2W 1M-K**	
R9A06	**109C010010**	**R-COMPOSITION - 1/2W 1M-K**	
R9A09	103P145050	R-CARBON - 1/2W 330K-J	
R9A10	103P714020	R-CARBON - 1/4W 27K-J	
R9A11	103P145050	R-CARBON - 1/2W 330K-J	
R9A12	103P713070	R-CARBON - 1/4W 10K-J	
R9A13	103P713000	R-CARBON - 1/4W 2.7K-J	
R9A20	103C181020	R-METAL - 2W 82-J	
R9A21	103P712050	R-CARBON - 1/4W 1K-J	
R9A23	103P710090	R-CARBON - 1/4W 47-J	
R9A24	103P142070	R-CARBON - 1/2W 1.5K-J	
R9A29	103P713070	R-CARBON - 1/4W 10K-J	
R9A51	103P715050	R-CARBON - 1/4W 330K-J	
R9A52	103P710090	R-CARBON - 1/4W 47-J	
R9A53	103P712030	R-CARBON - 1/4W 680-J	
R9A54	102P107000	R-WIRE - 2W 0.15-K	
R9A55	102P106090	R-WIRE - 2W 0.12-K	
R9A57	103P712090	R-CARBON - 1/4W 2.2K-J	
R9A58	103P145030	R-CARBON - 1/2W 220K-J	
R9A59	103P710070	R-CARBON - 1/4W 33-J	
R9A61	103P713040	R-CARBON - 1/4W 5.6K-J	
R9A62	103P713070	R-CARBON - 1/4W 10K-J	
R9A63	103P713020	R-CARBON - 1/4W 3.9K-J	
R9A66	103P712070	R-CARBON - 1/4W 1.5K-J	
R9A67	103P710050	R-CARBON - 1/4W 22-J	
R9A68	103C180050	R-METAL - 2W 22-J	
R9A69	103C180050	R-METAL - 2W 22-J	
R9A70	109D151090	R-CARBON - 1/4W 33-J	
R9A71	103P145030	R-CARBON - 1/2W 220K-J	
R9A73	103P412050	R-CARBON - 1/4W 1K-J	
R9A74	103P144040	R-CARBON - 1/2W 39K-J	
R9A80	103C193060	R-METAL - 3W 8.2K-J	
R9A81	103P142090	R-CARBON - 1/2W 2.2K-J	
R9A83	103P464010	R-METAL - 1/4W 4.7K-F	
R9A84	103P713070	R-CARBON - 1/4W 10K-J	
R9B01	103P711030	R-CARBON - 1/4W 100-J	
R9B02	103P714010	R-CARBON - 1/4W 22K-J	
R9B03	103P714050	R-CARBON - 1/4W 47K-J	
R9B04	103P714050	R-CARBON - 1/4W 47K-J	
R9B05	103P714090	R-CARBON - 1/4W 100K-J	
R9B06	103P714090	R-CARBON - 1/4W 100K-J	
R9B07	103P714010	R-CARBON - 1/4W 22K-J	
R9B08	109D151030	R-CARBON - 1/4W 4.7-J	
R9B09	109D151030	R-CARBON - 1/4W 4.7-J	
R9C31	103C197040	R-METAL - 3W 0.33-J	
R9C32	103C197040	R-METAL - 3W 0.33-J	
R9D00	**109D036020**	**R-COMPOSITION - 1/2W 4.7M-K**	

[#] Model Legend: (1) VS-50111,, (2) VS-60111, (3) WS-48311, (4) WS-55311, (5) WS-55411, (6) WS-65311, (7) WS-65411, (8) WS-73411

CAPACITORS & TRIMMERS

CHIP Type Capacitors (Listed by Value)

Value	Part No.	Value	Part No.
CJ50V 3P-C	154P340040	B50V 1000P-K	141P140090
CH50V 10P-C	154P341010	B50V 1500P-K	141P141010
CH50V 15P-J	154P341050	B50V 4700P-K	141P141070
CH50V 22P-J	154P341090	B50V 6800P-K	141P141090
CH50V 33P-J	154P342030	B50V 8200P-K	141P142000
CH50V 47P-J	154P342070	B50V 0.01M-K	141P142010
CH50V 56P-J	154P342090	F50V 0.01M-Z	141P143080
SL50V 56P-J	154P353000	B25V 0.047M-K	141P142090
CH50V 68P-J	154P343010	B25V 0.068M-K	141P143010
CH50V 82P-J	154P343030	B16V 0.082M-K	141P143020
CH50V 100P-J	154P343050	B16V 0.1M-K	141P143030
CH50V 120P-J	154P343070	F25V 0.1M-Z	141P144020
SL50V 120P-J	154P353080	B10V 0.47M-K	141P146080
CH50V 150P-J	154P343090	B16V 0.47M-K	141P139090
SL50V 150P-J	154P354000	F16V 0.47M-Z	141P144050
B50V 220P-K	141P140010	B16V 1M-K	141P134070
CH50V 220P-J	154P344030	F16V 1M-Z	141P144060
CH50V 270P-J	154P344050	50V 2.2M-M 105C	181P526020
SL50V 390P-J	154P355000	6.3V 22M-M 105C	181P520010
B50V 470P-K	141P140050	6.3V 47M-M 105C	181P520030
CH50V 470P-J	154P345010	16V 47M-M	181P502060
SL50V 470P-J	154P355020	16V 47M-M 105C	181P522060
CH25V 560P-J	154P345030	6.3V 100M-M 105C	181P520040
CH25V 1000P-J	154P345090		

Conventional Capacitors (By Ref #)

Ref #	Part #	Part Name & Description	[#]
C1A13	181P352040	C-ELEC - 16V 100M-M	
C1A21	181P210040	C-ELEC - 6.3V 100M-M	
C1A24	181P210040	C-ELEC - 6.3V 100M-M	
C1A26	172P262010	C-M-POLY - 50V 0.047M-J	
C1B13	181P355090	C-ELEC - 50V 100M-M	
C1B21	181P210040	C-ELEC - 6.3V 100M-M	
C1B24	181P210040	C-ELEC - 6.3V 100M-M	
C1B26	172P262010	C-M-POLY - 50V 0.047M-J	
C2K00	181P352030	C-ELEC - 16V 47M-M	
C2K18	181P351060	C-ELEC - 10V 330M-M	
C2K44	181P352040	C-ELEC - 16V 100M-M	
C2L01	181P352030	C-ELEC - 16V 47M-M	
C2L12	181P216040	C-ELEC - 50V 4.7M-M	
C2L14	181P351080	C-ELEC - 10V 1000M-M	
C2L16	181P210040	C-ELEC - 6.3V 100M-M	
C2L22	181P212060	C-ELEC - 16V 47M-M	
C2L24	181P352030	C-ELEC - 16V 47M-M	
C2LA0	181P352030	C-ELEC - 16V 47M-M	
C2LB1	181P216040	C-ELEC - 50V 4.7M-M	
C2LB3	181P351080	C-ELEC - 10V 1000M-M	
C2LB9	181P210040	C-ELEC - 6.3V 100M-M	
C2LC2	181P212060	C-ELEC - 16V 47M-M	
C2LC4	181P352030	C-ELEC - 16V 47M-M	
C2M03	181P352040	C-ELEC - 16V 100M-M	
C2M08	181P352030	C-ELEC - 16V 47M-M	
C2M88	181P355010	C-ELEC - 50V 1M-M	
C2MA4	181P352030	C-ELEC - 16V 47M-M	
C2MA6	181P352030	C-ELEC - 16V 47M-M	
C2MC4	181P352030	C-ELEC - 16V 47M-M	
C2MD6	181P210040	C-ELEC - 6.3V 100M-M	
C2N00	181P355000	C-ELEC - 50V 0.47M-M	
C2N01	181P355000	C-ELEC - 50V 0.47M-M	
C2N02	181P355000	C-ELEC - 50V 0.47M-M	
C2N05	181P355000	C-ELEC - 50V 0.47M-M	
C2N06	181P355000	C-ELEC - 50V 0.47M-M	
C2N07	181P355000	C-ELEC - 50V 0.47M-M	
C2N17	181P355000	C-ELEC - 50V 0.47M-M	
C2N18	181P355000	C-ELEC - 50V 0.47M-M	
C2N19	181P355000	C-ELEC - 50V 0.47M-M	
C2N22	181P352030	C-ELEC - 16V 47M-M	
C2N28	181P352030	C-ELEC - 16V 47M-M	
C2N29	181P352030	C-ELEC - 16V 47M-M	
C2P02	181P352030	C-ELEC - 16V 47M-M	
C2P04	181P351050	C-ELEC - 10V 220M-M	
C2P08	181P352030	C-ELEC - 16V 47M-M	
C2S00	181P355000	C-ELEC - 50V 0.47M-M	
C2S01	181P355000	C-ELEC - 50V 0.47M-M	
C2S02	181P355000	C-ELEC - 50V 0.47M-M	
C2S05	181P355000	C-ELEC - 50V 0.47M-M	
C2S06	181P355000	C-ELEC - 50V 0.47M-M	
C2S07	181P355000	C-ELEC - 50V 0.47M-M	
C2S10	181P352030	C-ELEC - 16V 47M-M	
C2S18	181P355000	C-ELEC - 50V 0.47M-M	
C2S19	181P355000	C-ELEC - 50V 0.47M-M	
C2S20	181P355000	C-ELEC - 50V 0.47M-M	
C2S22	181P352030	C-ELEC - 16V 47M-M	
C2S29	181P352030	C-ELEC - 16V 47M-M	
C2V04	181P359060	C-ELEC - 50V 0.1M-M	
C2V05	181P359060	C-ELEC - 50V 0.1M-M	
C2V06	181P359060	C-ELEC - 50V 0.1M-M	
C2V08	181P359060	C-ELEC - 50V 0.1M-M	
C2V09	181P359060	C-ELEC - 50V 0.1M-M	
C2V10	181P359060	C-ELEC - 50V 0.1M-M	
C2V14	181P352040	C-ELEC - 16V 100M-M	
C2V19	181P352040	C-ELEC - 16V 100M-M	
C2V29	181P352040	C-ELEC - 16V 100M-M	
C2V30	181P118010	C-ELEC - 50V 0.68M-M	
C2V32	181P355000	C-ELEC - 50V 0.47M-M	
C2V48	172P166030	C-TF - 50V 0.1M-J	
C2V49	172P166030	C-TF - 50V 0.1M-J	
C2V55	181P352040	C-ELEC - 16V 100M-M	
C2V57	181P355060	C-ELEC - 50V 22M-M	
C2V61	181P352040	C-ELEC - 16V 100M-M	
C2W02	181P352080	C-ELEC - 16V 1000M-M	
C2W05	181P352030	C-ELEC - 16V 47M-M	
C2W09	181P352030	C-ELEC - 16V 47M-M	
C2W14	181P352030	C-ELEC - 16V 47M-M	
C2Y09	181P352030	C-ELEC - 16V 47M-M	
C3A34	181P355030	C-ELEC - 50V 3.3M-M	
C3E02	181P355010	C-ELEC - 50V 1M-M	
C3E04	181P355010	C-ELEC - 50V 1M-M	
C3E07	181P353090	C-ELEC - 25V 2200M-M	
C3E08	141P197080	C-CER - F50V 0.1M-Z	
C3E09	172P262050	C-M-POLY - 50V 0.1M-J	
C3E11	172P262050	C-M-POLY - 50V 0.1M-J	
C3E12	172P262050	C-M-POLY - 50V 0.1M-J	
C3E14	172P262050	C-M-POLY - 50V 0.1M-J	
C3K00	181P122070	C-ELEC-NP - 25V 10M-M	
C3K04	181P122070	C-ELEC-NP - 25V 10M-M	
C3K10	181P355010	C-ELEC - 50V 1M-M	

[#] Model Legend: (1) VS-50111,, (2) VS-60111, (3) WS-48311, (4) WS-55311, (5) WS-55411, (6) WS-65311, (7) WS-65411, (8) WS-73411

Ref #	Part #	Part Name & Description	[#]
C3K11	181P355010	C-ELEC - 50V 1M-M	
C3K12	181P355010	C-ELEC - 50V 1M-M	
C3K13	181P355010	C-ELEC - 50V 1M-M	
C3K14	181P355010	C-ELEC - 50V 1M-M	
C3K15	181P355010	C-ELEC - 50V 1M-M	
C3K16	181P355010	C-ELEC - 50V 1M-M	
C3K17	181P355010	C-ELEC - 50V 1M-M	
C3K18	181P355010	C-ELEC - 50V 1M-M	
C3K19	181P355010	C-ELEC - 50V 1M-M	
C3K20	181P355010	C-ELEC - 50V 1M-M	
C3K21	181P355010	C-ELEC - 50V 1M-M	
C3K22	181P355010	C-ELEC - 50V 1M-M	
C3K23	181P355010	C-ELEC - 50V 1M-M	
C3K25	181P352030	C-ELEC - 16V 47M-M	
C4B01	172P261030	C-M-POLY - 50V 0.01M-J	
C4B02	181P358000	C-ELEC - 35V 1000M-M	
C4B03	172P383030	C-M-POLY - 100V 0.47M-K	
C4B04	181P184020	C-ELEC - 35V 100M-M 105C	
C4B06	172P330090	C-POLY - 50V 4700P-J	
C4B09	181P355060	C-ELEC - 50V 22M-M	
C4B11	181P353090	C-ELEC - 25V 2200M-M	
C5A03	142P020090	C-CER - B50V 1000P-K	
C5A05	172P262010	C-M-POLY - 50V 0.047M-J	
C5A10	181P191000	C-ELEC - 160V 22M-M/Q	
C5A12	181P354090	C-ELEC - 35V 470M-M	
C5A17	142P020090	C-CER - B50V 1000P-K	
C5A21	172P262050	C-M-POLY - 50V 0.1M-J	
C5A31	172P571030	C-M-PLA-PP - 1500VHP 3300P-J-OR-H	1-4
C5A31	172P571050	C-M-PLA-PP - 1500VHP 3900P-J-OR-H	5-8
C5A32	172P571030	C-M-PLA-PP - 1500VHP 3300P-J-OR-H	1-4
C5A32	172P571050	C-M-PLA-PP - 1500VHP 3900P-J-OR-H	5-8
C5A34	154P262050	C-CER - R2KV 560P-K	
C5A35	142P012010	C-CER - B500V 4700P-K	
C5A36	172P524010	C-M-POLY - 250V 2. 2M-J	
C5A37	172P435090	C-M-PLA-PP - 250V 0.27M	3&4
C5A37	172P436010	C-M-PLA-PP - 250V 0.33M-J	125678
C5A38	172P435090	C-M-PLA-PP - 250V 0.27M	3&4
C5A38	172P436010	C-M-PLA-PP - 250V 0.33M-J	125678
C5A39	142P011030	C-CER - B500V 1000P-K	
C5A40	142P011000	C-CER - B500V 560P-K	
C5A41	181P352080	C-ELEC - 16V 1000M-M	
C5A42	181P352030	C-ELEC - 16V 47M-M	
C5A43	181P190050	C-ELEC - 160V 1M-M/Q	
C5A45	181P352070	C-ELEC - 16V 470M-M	
C5A51	154P260010	C-CER - R1KV 220P-K	
C5A52	**172P580090**	**C-M-PLA-PP - 1800V 2200P-J**	
C5A55	172P088060	C-PLAST-PP - 630V 6800P-J	
C5A57	**172P262070**	**C-M-POLY - 50V 0.15M-J**	
C5A60	**172P262050**	**C-M-POLY - 50V 0.1M-J**	
C5A64	181P352010	C-ELEC - 16V 22M-M	
C5A68	181P123070	C-ELEC-NP - 50V 0.47M-M	
C5A70	**172P264010**	**C-M-POLY - 50V 2.2M-J**	
C5A71	**172P262060**	**C-M-POLY - 50V 0.12M-J**	
C5A72	181P355010	C-ELEC - 50V 1M-M	
C5H01	181P354080	C-ELEC - 35V 330M-M	
C5H04	155P238090	C-CER - CH50V 270P-J	
C5H16	172P186030	C-PLAST-PP - 200V 0.01M-K	
C5H17	172P261030	C-M-POLY - 50V 0.01M-J	
C5H19	181P183010	C-ELEC - 25V 100M-M 105C	
C5H20	181P352040	C-ELEC - 16V 100M-M	

Ref #	Part #	Part Name & Description	[#]
C5H21	181P780060	C-ELEC - 160V 10M-M 105C	
C5H24	181P192060	C-ELEC - 200V 22M-M/Q	
C5K00	172P572090	C-M-PLA-PP - 1500V 0.015M-J-OR-H	
C5K01	172P572090	C-M-PLA-PP - 1500V 0.015M-J-OR-H	
C5K02	181P198040	C-ELEC - 450V 4.7M-M/Q	
C5K03	142P020050	C-CER - B50V 470P-K	
C5K12	181P352040	C-ELEC - 16V 100M-M	
C5K15	181P191000	C-ELEC - 160V 22M-M/Q	
C6B01	154P400010	C-CER - B1KV 220P-K	
C6B02	181P195050	C-ELEC - 350V 10M-M	
C6B03	155P232030	C-CER - CH50V 33P-J	
C6B05	181P352030	C-ELEC - 16V 47M-M	
C6B07	142P012050	C-CER - B500V 0.01M-K	
C6B08	142P020030	C-CER - B50V 330P-K	
C6B10	142P012050	C-CER - B500V 0.01M-K	
C6B12	155P239040	C-CER - CH50V 100P-J	
C6B13	155P231090	C-CER - CH50V 22P-J	
C6B14	154P405000	C-CER - B3KV 1000P-K	
C6G01	154P400010	C-CER - B1KV 220P-K	
C6G02	181P195050	C-ELEC - 350V 10M-M	
C6G03	155P232010	C-CER - CH50V 27P-J	
C6G05	181P352030	C-ELEC - 16V 47M-M	
C6G07	142P012050	C-CER - B500V 0.01M-K	
C6G10	142P012050	C-CER - B500V 0.01M-K	
C6G12	155P239040	C-CER - CH50V 100P-J	
C6G13	155P231090	C-CER - CH50V 22P-J	
C6G14	154P405000	C-CER - B3KV 1000P-K	
C6R01	154P400010	C-CER - B1KV 220P-K	
C6R02	181P195050	C-ELEC - 350V 10M-M	
C6R03	155P231090	C-CER - CH50V 22P-J	
C6R05	181P352030	C-ELEC - 16V 47M-M	
C6R07	142P012050	C-CER - B500V 0.01M-K	
C6R10	142P012050	C-CER - B500V 0.01M-K	
C6R12	155P239040	C-CER - CH50V 100P-J	
C6R13	155P231090	C-CER - CH50V 22P-J	
C6R14	154P405000	C-CER - B3KV 1000P-K	
C7A03	181P355010	C-ELEC - 50V 1M-M	
C7A16	181P352030	C-ELEC - 16V 47M-M	
C7A62	181P352030	C-ELEC - 16V 47M-M	
C7A99	181P352030	C-ELEC - 16V 47M-M	
C7B01	181P352050	C-ELEC - 16V 220M-M	578
C7C30	181P354040	C-ELEC - 50V 10M-M	
C7K01	181P352030	C-ELEC - 16V 47M-M	
C7K23	181P355010	C-ELEC - 50V 1M-M	578
C7K25	172P262050	C-M-POLY - 50V 0.1M-J	578
C7K26	172P262050	C-M-POLY - 50V 0.1M-J	578
C7K27	181P355010	C-ELEC - 50V 1M-M	578
C7K28	181P352040	C-ELEC - 16V 100M-M	578
C7V02	181P352030	C-ELEC - 16V 47M-M	
C7V13	181P352030	C-ELEC - 16V 47M-M	
C8C03	181P358000	C-ELEC - 35V 1000M-M	
C8C05	181P358000	C-ELEC - 35V 1000M-M	
C8C18	181P358000	C-ELEC - 35V 1000M-M	
C8C20	181P358000	C-ELEC - 35V 1000M-M	
C8C43	142P020080	C-CER - B50V 820P-K	
C8C44	142P020080	C-CER - B50V 820P-K	
C8C45	142P020080	C-CER - B50V 820P-K	
C8C46	142P020080	C-CER - B50V 820P-K	
C8C47	142P020080	C-CER - B50V 820P-K	
C8C48	142P020080	C-CER - B50V 820P-K	

[#] Model Legend: (1) VS-50111,, (2) VS-60111, (3) WS-48311, (4) WS-55311, (5) WS-55411, (6) WS-65311, (7) WS-65411, (8) WS-73411

Ref #	Part #	Part Name & Description	[#]
C8C49	155P231050	C-CER - CH50V 15P-J	
C8C50	155P231050	C-CER - CH50V 15P-J	
C8D16	181P352030	C-ELEC - 16V 47M-M	
C8D19	181P352030	C-ELEC - 16V 47M-M	
C8D20	181P352030	C-ELEC - 16V 47M-M	
C8D21	181P352030	C-ELEC - 16V 47M-M	
C8D22	181P352030	C-ELEC - 16V 47M-M	
C8D29	181P355010	C-ELEC - 50V 1M-M	
C8D30	181P352030	C-ELEC - 16V 47M-M	
C8D31	181P352030	C-ELEC - 16V 47M-M	
C8D33	181P352030	C-ELEC - 16V 47M-M	
C8D39	181P352030	C-ELEC - 16V 47M-M	
C8D40	181P352030	C-ELEC - 16V 47M-M	
C8E01	181P352030	C-ELEC - 16V 47M-M	
C8E03	181P352030	C-ELEC - 16V 47M-M	
C8E05	181P352030	C-ELEC - 16V 47M-M	
C8E07	181P352030	C-ELEC - 16V 47M-M	
C8E09	181P352030	C-ELEC - 16V 47M-M	
C8E12	181P352030	C-ELEC - 16V 47M-M	
C8E14	181P352030	C-ELEC - 16V 47M-M	
C8E16	181P352030	C-ELEC - 16V 47M-M	
C8G00	181P352030	C-ELEC - 16V 47M-M	
C8G03	181P352020	C-ELEC - 16V 33M-M	
C8G05	181P352030	C-ELEC - 16V 47M-M	
C8G06	181P352030	C-ELEC - 16V 47M-M	
C9A05	**189P185070**	**C-CER - 250VAC 1000P-M**	
C9A06	**189P185070**	**C-CER - 250VAC 1000P-M**	
C9A07	**189P153040**	**C-M-POLY - 250VAC 0.1M-M**	
C9A08	**189P185090**	**C-CER - 250VAC 2200P-M**	
C9A09	**189P185090**	**C-CER - 250VAC 2200P-M**	
C9A10	**189P185090**	**C-CER - 250VAC 2200P-M**	
C9A11	**189P185090**	**C-CER - 250VAC 2200P-M**	
C9A13	**189P152070**	**C-M-POLY - 250VAC 0.01M-M**	
C9A14	**189P152070**	**C-M-POLY - 250VAC 0.01M-M**	
C9A15	172P262050	C-M-POLY - 50V 0.1M-J	
C9A16	189P185070	C-CER - 250VAC 1000P-M	
C9A17	189P185070	C-CER - 250VAC 1000P-M	
C9A22	181P199080	C-ELEC - 200V 47M-M/Q	
C9A27	154P270050	C-CER - SL1KV 22P-J	
C9A28	172P262050	C-M-POLY - 50V 0.1M-J	
C9A29	142P010090	C-CER - B500V 470P-K	
C9A33	181P743060	C-ELEC - 16V 680M-M	
C9A34	181P352040	C-ELEC - 16V 100M-M	
C9A39	181P355000	C-ELEC - 50V 0.47M-M	
C9A50	142P020050	C-CER - B50V 470P-K	
C9A51	181P354070	C-ELEC - 35V 220M-M	
C9A52	154P400070	C-CER - B1KV 2200P-K RA	
C9A53	185D122050	C-ELEC - H200V 1000M-M 105C	
C9A54	154P260080	C-CER - R1KV 3300P-K	
C9A55	172P339070	C-POLY - 50V 560P-J	
C9A57	142P010090	C-CER - B500V 470P-K	
C9A58	185D163020	C-ELEC - H50V 4700M-M 105C	
C9A59	185D122050	C-ELEC - H200V 1000M-M 105C	
C9A60	154P400030	C-CER - B1KV 470P-K	
C9A61	142P010090	C-CER - B500V 470P-K	
C9A62	189D183010	C-ELEC - 400AXW100M	
C9A63	185D063030	C-ELEC - H180V 820M-M 105C	
C9A64	181P190090	C-ELEC - 160V 10M-M/Q	
C9A65	181P194000	C-ELEC - 250V 10M-M/Q	
C9A66	142P012050	C-CER - B500V 0.01M-K	
C9A68	142P010090	C-CER - B500V 470P-K	
C9A69	181P736070	C-ELEC - 35V 330M-M 105C	
C9A70	181P736070	C-ELEC - 35V 330M-M 105C	
C9A71	181P736070	C-ELEC - 35V 330M-M 105C	
C9A72	181P736070	C-ELEC - 35V 330M-M 105C	
C9A73	181P736070	C-ELEC - 35V 330M-M 105C	
C9A74	142P010090	C-CER - B500V 470P-K	
C9B03	181P746060	C-ELEC - 35V 330M-M	
C9B04	142P020090	C-CER - B50V 1000P-K	
C9B05	181P743060	C-ELEC - 16V 680M-M	
C9B06	181P746060	C-ELEC - 35V 330M-M	
C9B07	142P020090	C-CER - B50V 1000P-K	
C9B08	181P743060	C-ELEC - 16V 680M-M	
C9B10	181P352080	C-ELEC - 16V 1000M-M	
C9B11	181P352080	C-ELEC - 16V 1000M-M	
C9C01	181P352030	C-ELEC - 16V 47M-M	
C9C05	181P352030	C-ELEC - 16V 47M-M	
C9C11	181P352030	C-ELEC - 16V 47M-M	
C9C15	181P352030	C-ELEC - 16V 47M-M	
C9C21	181P352030	C-ELEC - 16V 47M-M	
C9C22	181P352030	C-ELEC - 16V 47M-M	
C9C30	181P351080	C-ELEC - 10V 1000M-M	
C9C31	181P351080	C-ELEC - 10V 1000M-M	
C9C32	181P352030	C-ELEC - 16V 47M-M	
C9C35	181P212060	C-ELEC - 16V 47M-M	
C9C41	181P352030	C-ELEC - 16V 47M-M	
C9C42	181P210040	C-ELEC - 6.3V 100M-M	
C9D00	**189P153040**	**C-M-POLY - 250VAC 0.1M-M**	
C9D01	**189P153040**	**C-M-POLY - 250VAC 0.1M-M**	
CF2L00	299P128010	CERAMIC-OSC - CSB500F2	
CF2LA0	299P128010	CERAMIC-OSC - CSB500F2	
CF2V01	299P259010	CERAMIC-OSC - 2.69MHZ	
CF7A01	299P261010	CERAMIC-OSC - 27.000 MHZ	

SWITCHES

S7L21	432P089010	SW-KEY-BOARD - PUSH SWITCH	
S7L22	432P089010	SW-KEY-BOARD - PUSH SWITCH	
S7L23	432P089010	SW-KEY-BOARD - PUSH SWITCH	
S7L24	432P089010	SW-KEY-BOARD - PUSH SWITCH	
S7L25	432P089010	SW-KEY-BOARD - PUSH SWITCH	
S7L26	432P089010	SW-KEY-BOARD - PUSH SWITCH	
S7L27	432P089010	SW-KEY-BOARD - PUSH SWITCH	
S7L28	432P089010	SW-KEY-BOARD - PUSH SWITCH	
S7L29	432P089010	SW-KEY-BOARD - PUSH SWITCH	

MISCELLANEOUS

	246C351030	AC-POWER-CORD	
	305P702020	RF-SW - YAA41-0126G	
	578D417010	PLATE-RF SW	
	330P276030	**DEFL-YOKE**	**1&2**
	330P276040	**DEFL-YOKE**	**3&4**
	330P276050	**DEFL-YOKE**	**5-8**
	338P054010	SVM-ASSY	12346
	338P054020	SVM-ASSY	578
	411D033010	CORE-FERRITE-CONN: VB, SR, SG, SB	
	411D044010	CORE-FERRITE-CONN: PM	
	449C141030	**SOCKET-CRT**	
	453B036010	**CAP-ANODE - SHORT - RED**	**1-7**
	453B036020	**CAP-ANODE - LONG - G&B**	**1-7**

[#] Model Legend: (1) VS-50111,, (2) VS-60111, (3) WS-48311, (4) WS-55311, (5) WS-55411, (6) WS-65311, (7) WS-65411, (8) WS-73411

Ref #	Part #	Part Name & Description	[#]
	453B036070	**CAP-ANODE - SHORT - RED**	**8**
	453B036080	**CAP-ANODE - LONG - G&B**	**8**
	480P039010	SPEAKER - 4 INCH	1&2
	480P053010	SPEAKER - 5 INCH	346
	480P063010	SPEAKER - 6 INCH	578
	490P154010	LENS - RED/BLUE	1&3
	490P154020	LENS - GREEN	1&3
	490P174010	LENS - RED	2&5
	490P174020	LENS - GREEN	2&5
	490P174030	LENS - BLUE	2&5
	490P174070	LENS - RED	6&7
	490P174080	LENS - GREEN	6&7
	490P174090	LENS - BLUE	6&7
	490P195010	LENS - ALL COLORS	8
	490P220010	LENS - ALL COLORS	4
	589C062010	CASTER	
	597D843010	STIFFENER-MIRROR - 3/4"X3/4" TUBING	6&7
	622B009010	TRAY CRT	1236
	622B009020	TRAY CRT	457
	622C067010	CRT-TRAY	8
	622C086010	MIRROR-CLIP - PLASTIC	3
	622D875010	CUSHION-TAPE (Secures Lens)	23578
	622D875030	CUSHION-TAPE (Secures Lens)	2
	622D875040	CUSHION - N9495B T 0.5	5
	642C340010	BOARD-MIRROR	6&7
	642C352010	CLIP-MIRROR	1245
	767C031010	MIRROR - 73"	8
	767D048090	MIRROR - 65"	6&7
	767D055040	MIRROR - 55"	4
	767D072010	MIRROR - 60"	2
	767D072020	MIRROR - 50"	1
	767D072030	MIRROR - 55"	5
	767D072040	MIRROR - 48"	3
AG5K00	224D019040	AIR-GAP - 2.0+-0.5KV S.LEAD	
AG6B01	224D019090	AIR-GAP - 1.5+-0.5KV S.LEAD	
AG6G01	224D019090	AIR-GAP - 1.5+-0.5KV S.LEAD	
AG6R01	224D019090	AIR-GAP - 1.5+-0.5KV S.LEAD	
F5A00	**283P043060**	**FUSE - LF251 3A**	
F9A02	**283P044020**	**FUSE - LF251 10A**	
F9A03	**283P043090**	**FUSE - LF251 5A**	
F9A04	**283P044020**	**FUSE - LF251 10A**	
F9A05	**283P043090**	**FUSE - LF251 5A**	
F9B01	**283P043060**	**FUSE - LF251 3A**	
F9D00	**283D131040**	**FUSE - S10A 125A**	
K9A50	**287P100010**	**RELAY-POWER - DG9D1-0(M)-II-0.25W**	
PC9A21	**268P058020**	**PHOTO-COUPLER - ON3131-R/ON3161-R**	
PC9A50	**268P106010**	**PHOTO-COUPLER - CNZ3133**	
PJ2J00	440C407010	PIN-JACK-BOARD-6P	
PJ2J01	440C410010	PIN-JACK-BOARD-5P	
PJ2J02	440C410010	PIN-JACK-BOARD-5P	3-8
PJ2J03	440C410010	PIN-JACK-BOARD-5P	
PJ2J04	440C409010	PIN-JACK-BOARD-2P	
PJ2J05	440C408010	PIN-JACK-BOARD-3P	
PJ2J11	440C412010	PIN-JACK-BOARD-3P	
PJ7A01	451C129010	JACK-MINI - AV NET/IR BLAST	578
PJ7A02	451C129010	JACK-MINI - AV NET/IR BLAST	578
TU1A01	**295P516010**	**TUNER-TV - 115-V-F045AP**	
TU1B01	**295P516020**	**TUNER-TV - 115-V-F025AP**	
X2L00	285P374020	QUARTZ-CRYST - 3.579545MHZ	
X2LA0	285P374020	QUARTZ-CRYST - 3.579545MHZ	

Ref #	Part #	Part Name & Description	[#]
X2M30	285P374050	QUARTZ-CRYST - 20.000MHZ	
X2N00	285P029030	QUARTZ-CRYST - 4.000 MHZ	
X2S00	285P029030	QUARTZ-CRYST - 4.000 MHZ	
X3A01	285P413010	QUARTZ-CRYST - 18.43 MHZ	
X7A13	285P374040	QUARTZ-CRYST - 10.000MHZ	
X7H00	285P335050	QUARTZ-CRYST - 80.000MHZ	
Z7K01	939P617010	UNIT-PREAMP - GP1U283Q	

PRINTED CIRCUIT BOARDS

930B884001	ASSY-PWB-SIGNAL	346
930B884002	ASSY-PWB-SIGNAL	5&7
930B884003	ASSY-PWB-SIGNAL	1&2
930B884004	ASSY-PWB-SIGNAL	8
930B885001	ASSY-PWB-MAIN	3&4
930B885002	ASSY-PWB-MAIN	5-7
930B885003	ASSY-PWB-MAIN	1&2
930B885004	ASSY-PWB-MAIN	8
930B886001	ASSY-PWB-POWER	3-7
930B886002	ASSY-PWB-POWER	1&2
930B886003	ASSY-PWB-POWER	8
930B887001	ASSY-PWB-TERMINAL	3-8
930B887002	ASSY-PWB-TERMINAL	1&2
935C995001	ASSY-PWB-CRT	
935C996001	ASSY-PWB-DOUBLER	
935D619001	ASSY-PWB-PREAMP	12346
935D619002	ASSY-PWB-PREAMP	578
935D620001	ASSY-PWB-FRONT	
935D621001	ASSY-PWB-CONTROL	

COSMETIC PARTS

975B176001	ASSY-CONTROL PANEL	578
702A393040	CONTROL PANEL - 65"	6
702A398030	COVER-CONTROL - 55"	578
702A402030	CONTROL PANEL - 50"	1
702A402040	CONTROL PANEL - 60"	2&4
702A404010	TERMINAL BOARD	
702C017010	COVER-SCREW-SIDE - MATTE	6-8
750A449010	BACK COVER - PLASTIC	3
761A158020	GRILLE-SP	1
761A159020	GRILLE-SP	2
761A159040	GRILLE-SP	4
761A171040	GRILLE-SPEAKER	6
761A172030	GRILLE-SPEAKER	5
761A173040	GRILLE-SPEAKER	7
761A195010	GRILLE-SPEAKER	3
761A196010	GRILLE-SPEAKER	8

ACCESSORIES

290P111010	TRANSMITTER REMOTE - V20	12346
290P111020	TRANSMITTER REMOTE - V20+	578
I/QR V20	QR-GUIDE	
I/SEP GUIDEWS65411	CABINET SEPARATION INST	7&8
I/SEP GUIDEWS65311	CABINET SEPARATION INST	6
I/B WS48311	IB - OWNERS GUIDE	

[#] Model Legend: (1) VS-50111,, (2) VS-60111, (3) WS-48311, (4) WS-55311, (5) WS-55411, (6) WS-65311, (7) WS-65411, (8) WS-73411

SCREEN ASSEMBLY PARTS

VS-50111 ***(Figure 1)***

Ref #	Part #	Part Name & Description	[#]
1	491P099010	SCREEN-LENTICULAR - 50"	
2	491P100010	LENS-FRESNEL - 50"	
3	702A402030	CONTROL PANEL - 50"	
4	622C060020	CLIP-SCREEN-TOP/BOT	
5	622C063020	HOLDER-SCREEN-BOT	
6	701B454020	FRAME SCREEN-TOP - 50"	
7	701B457010	FRAME SCREEN-S - 50"	
8	702A388030	CAP-CORNER-LEFT	
9	702A388040	CAP-CORNER-RIGHT	
10	760D627010	DIAMOND SHIELD - 50"	

VS-60111 ***(Figure 1)***

Ref #	Part #	Part Name & Description	[#]
1	491P109010	SCREEN-LENTICULAR - 60"	
2	491P110010	LENS-FRESNEL - 60"	
3	702A402040	CONTROL PANEL- 60"	
4	622C060040	CLIP-SCREEN-TOP/BOT	
5	622C063040	HOLDER-SCREEN-BOT	
6	701B454010	FRAME SCREEN-TOP - 55"	
7	701B457020	FRAME SCREEN-S - 60"	
8	702A388030	CAP-CORNER-LEFT	
9	702A388040	CAP-CORNER-RIGHT	
10	760D627030	DIAMOND SHIELD - 60"	

WS-55311 ***(Figure 1)***

Ref #	Part #	Part Name & Description	[#]
1	491P125020	SCREEN-LENTICULAR - 55"	
2	491P126020	LENS-FRESNEL - 55"	
3	702A402040	CONTROL PANEL - 60"	
4	622C060040	CLIP-SCREEN-TOP/BOT	
5	622C063040	HOLDER-SCREEN-BOT	
6	701B457030	FRAME SCREEN-S - 55"	
7	702A388030	CAP-CORNER-LEFT	
8	702A388040	CAP-CORNER-RIGHT	
9	701B454010	FRAME SCREEN-TOP - 55"	
10	760D627060	DIAMOND SHIELD - 55"	

WS-65311 ***(Figure 1)***

Ref #	Part #	Part Name & Description	[#]
1	491P145010	SCREEN-LENTICULAR - 65"	
2	491P146010	LENS-FRESNEL - 65"	
3	702A393040	CONTROL PANEL - 65"	
4	622C059050	HOLDER-SCREEN-BOT	
5	622C060060	CLIP-SCREEN-TOP/BOT	
6	701B454030	FRAME SCREEN-TOP - 65"	
7	701B457040	FRAME SCREEN-S - 65"	
8	702A388030	CAP-CORNER-LEFT	
9	702A388040	CAP-CORNER-RIGHT	
10	760D627070	DIAMOND SHIELD - 65"	

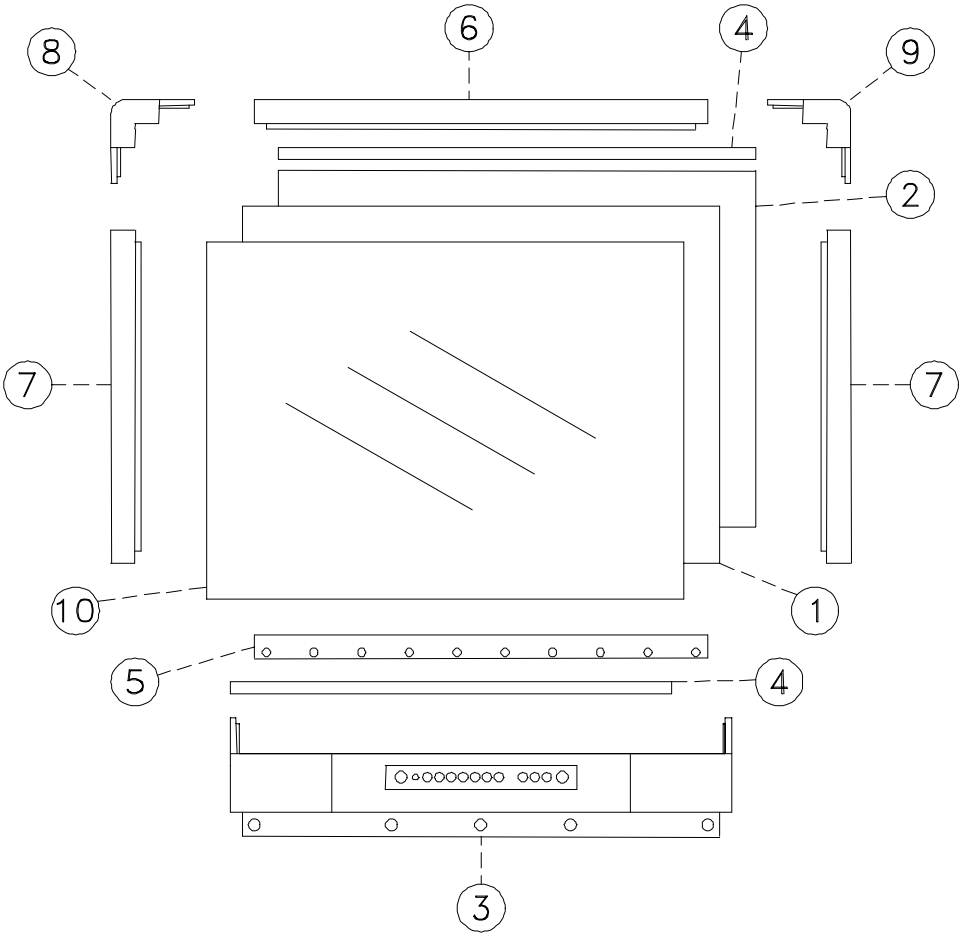

Figure 1: WS-50111 / WS-60111 / WS-55311 / WS-65311
Screen Assembly Parts (Front View)

[[#] Model Legend: (1) VS-50111,, (2) VS-60111, (3) WS-48311, (4) WS-55311, (5) WS-55411, (6) WS-65311, (7) WS-65411, (8) WS-73411

Ref #	Part #	Part Name & Description	[#]
WS-55411 ***(Figure 2)***			
1	491P103030	SCREEN-LENTICULAR - 55"	
2	491P104030	LENS-FRESNEL - 55"	
4&6	701B429080	SCREEN FRAME-TOP/BOT - 55"	
5	701B430010	SCREEN-FRAME-SIDE - 55"	
7	702A396010	CAP-CORNERS	
8	760D627060	DIAMOND SHIELD - 55"	
9	622C071050	CLIP-SCREEN-TOP/BOT - 55"	
WS-65411 ***(Figure 2)***			
1	491P145010	SCREEN-LENTICULAR - 65"	
2	491P146010	LENS-FRESNEL - 65"	
4&6	701B429020	SCREEN-FRAME-TOP/BOT - 65"	
5	701B430020	SCREEN-FRAME-SIDE - 65"	
7	702A396010	CAP-CORNERS	
8	760D627070	DIAMOND SHIELD - 65"	
9	622C060060	CLIP-SCREEN-TOP/BOT	
WS-73411 ***(Figure 2)***			
1	491P085030	SCREEN-LENTICULAR - 73"	
2	491P086030	LENS-FRESNEL - 73"	
9	622C071040	CLIP-SCREEN-TOP/BOT - 73"	
4	701B429060	SCREEN FRAME - TOP - 73"	
6	701B429070	SCREEN FRAME - BOT - 73"	
5	701B430040	FRAME SCREEN-SIDE - 73"	
7	702A396010	CAP-CORNERS	
8	760D638010	DIAMOND SHIELD - 73"	

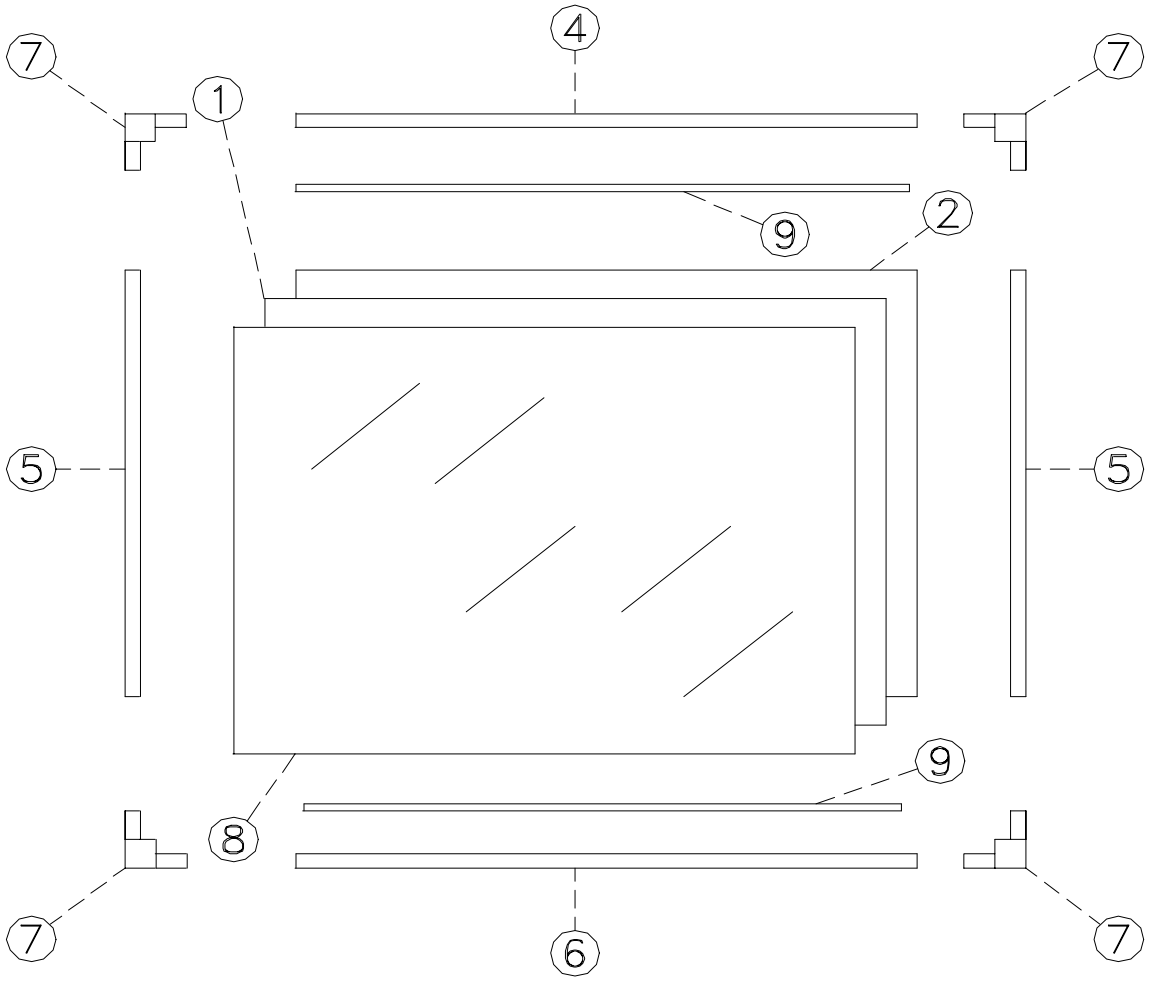

Figure 2: WS-55411 / WS-65411 / WS-73411
Screen Assembly Parts (Front View)

[#] Model Legend: (1) VS-50111,, (2) VS-60111, (3) WS-48311, (4) WS-55311, (5) WS-55411, (6) WS-65311, (7) WS-65411, (8) WS-73411

Ref #	Part #	Part Name & Description	[#]
WS-48311 ***(Figure 3)***			
1	491P138010	SCREEN-LENTICULAR - 48"	
2	491P139010	LENS-FRESNEL - 48"	
3	622B010010	HOLDER-TOP	
4	635B109010	STIFFENER-TOP-METAL	
5	622B011010	HOLDER-BOTTOM	
6	622B012010	HOLDER-SIDE	
7	598D339010	BRACKET-SCREEN SIDE-METAL	
8	751A005010	SCREEN-FRAME-BEZEL	
9	760D628060	DIAMOND SHIELD - 48"	
10	622B013010	CLIP-SHIELD-SIDE - 48"	

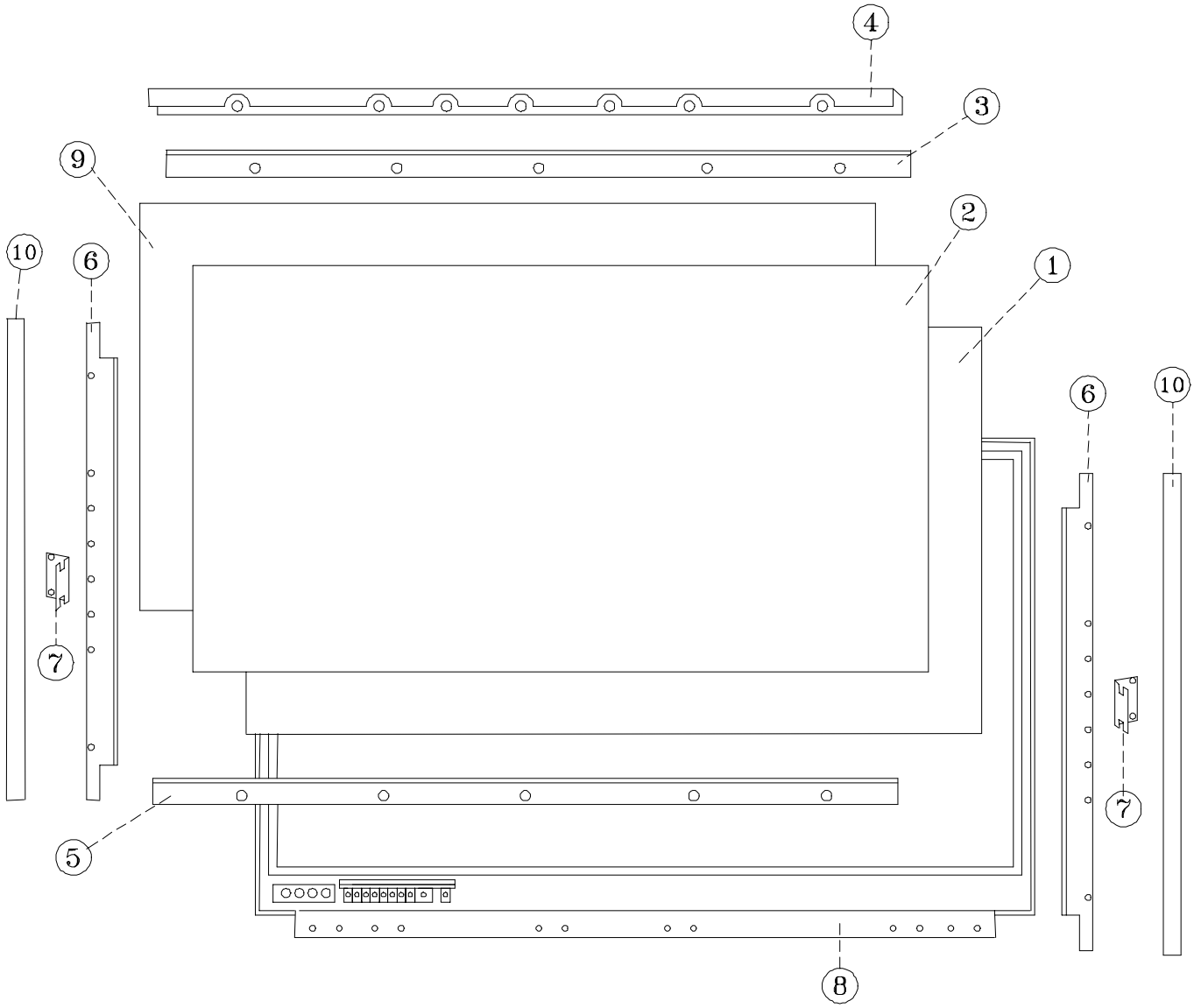

Figure 3: WS-48311
Screen Assembly Parts (Rear View)

POWER SUPPLY

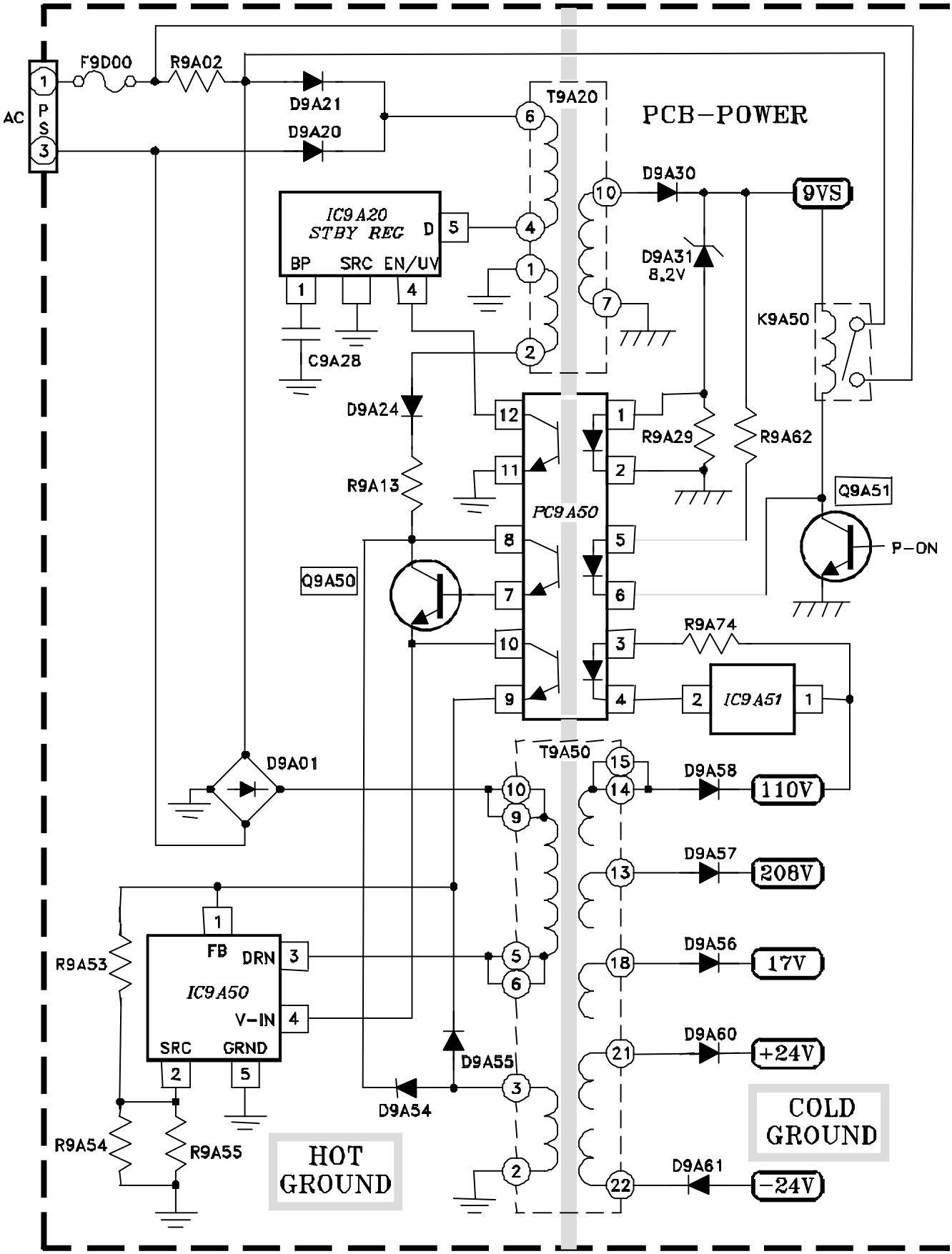

VIDEO/COLOR PATH

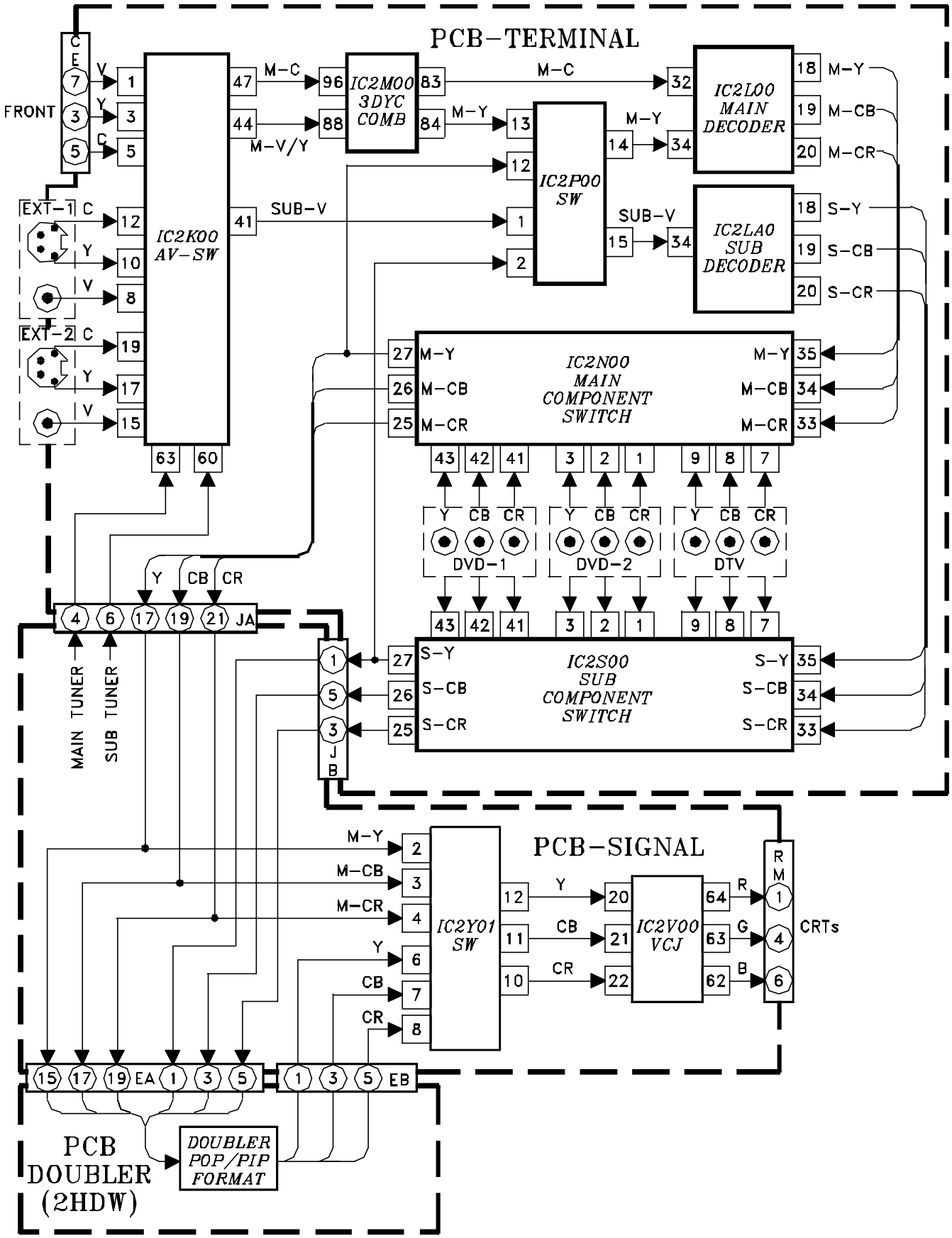

SYNC PATH

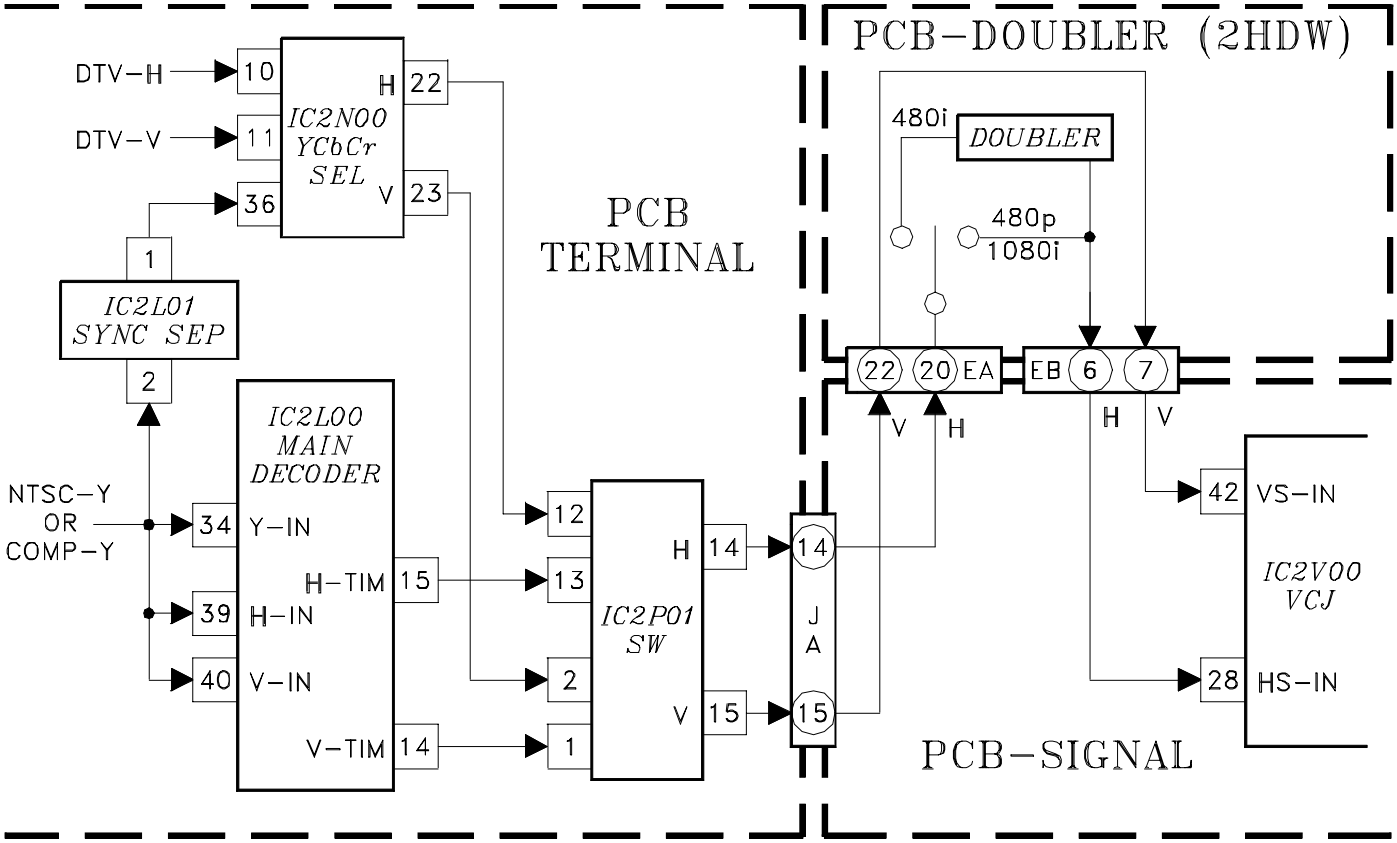
PCB-DOUBLER (2HDW)
DTV-H
DTV-V
10
11
36
IC2N00
YCbCr
SEL
H
V
22
23
1
IC2L01
SYNC SEP
2
PCB
TERMINAL
480i
DOUBLER
480p
1080i
22
20
EA
EB
6
7
V
H
H
V
IC2L00
MAIN
DECODER
NTSC-Y
OR
COMP-Y
34
Y-IN
39
H-IN
40
V-IN
H-TIM
V-TIM
15
14
12
13
2
1
IC2P01
SW
H
V
14
15
J
A
14
15
42
VS-IN
IC2V00
VCJ
28
HS-IN
PCB-SIGNAL

DEFLECTION / HV CIRCUIT

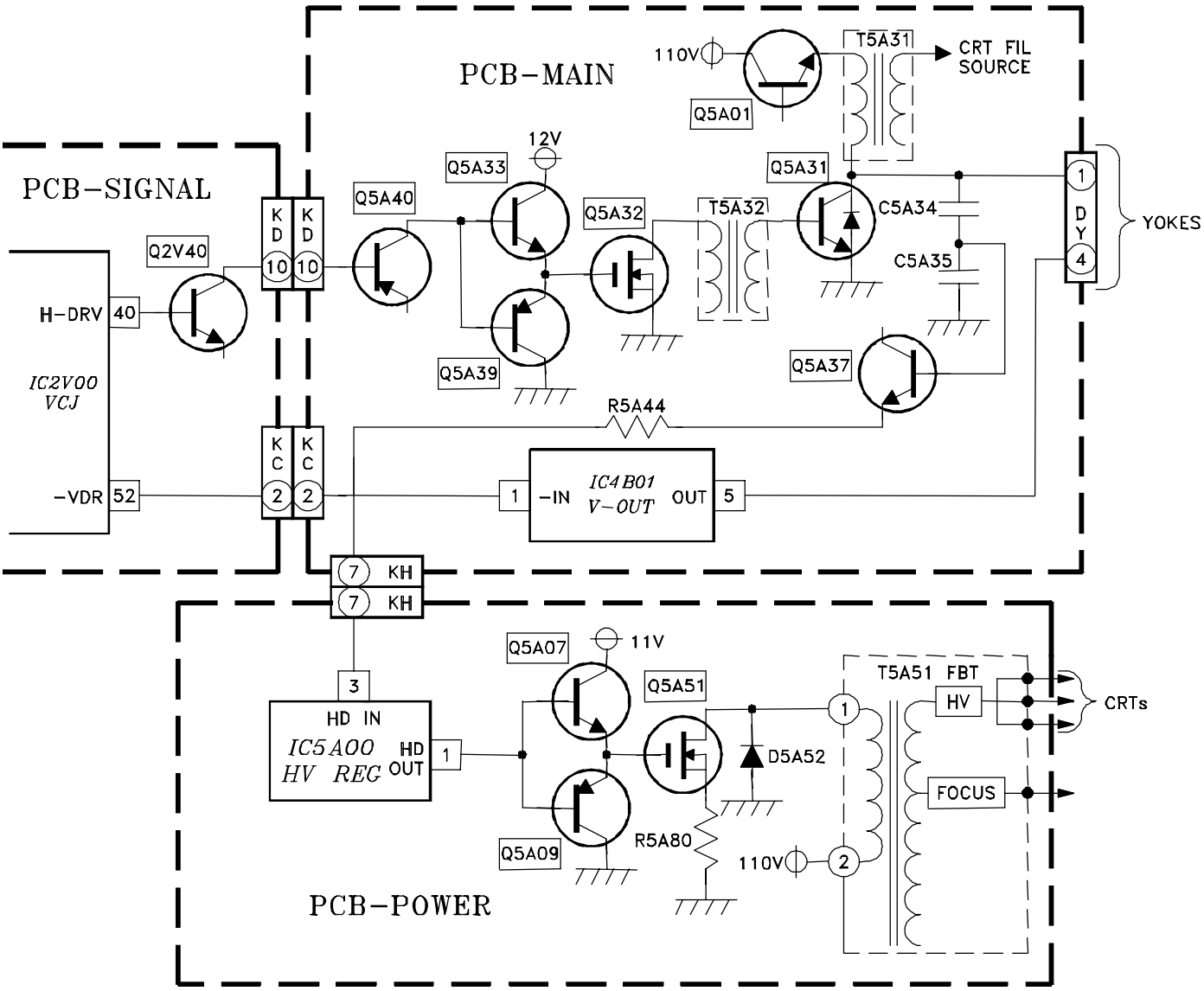

X-RAY PROTECT

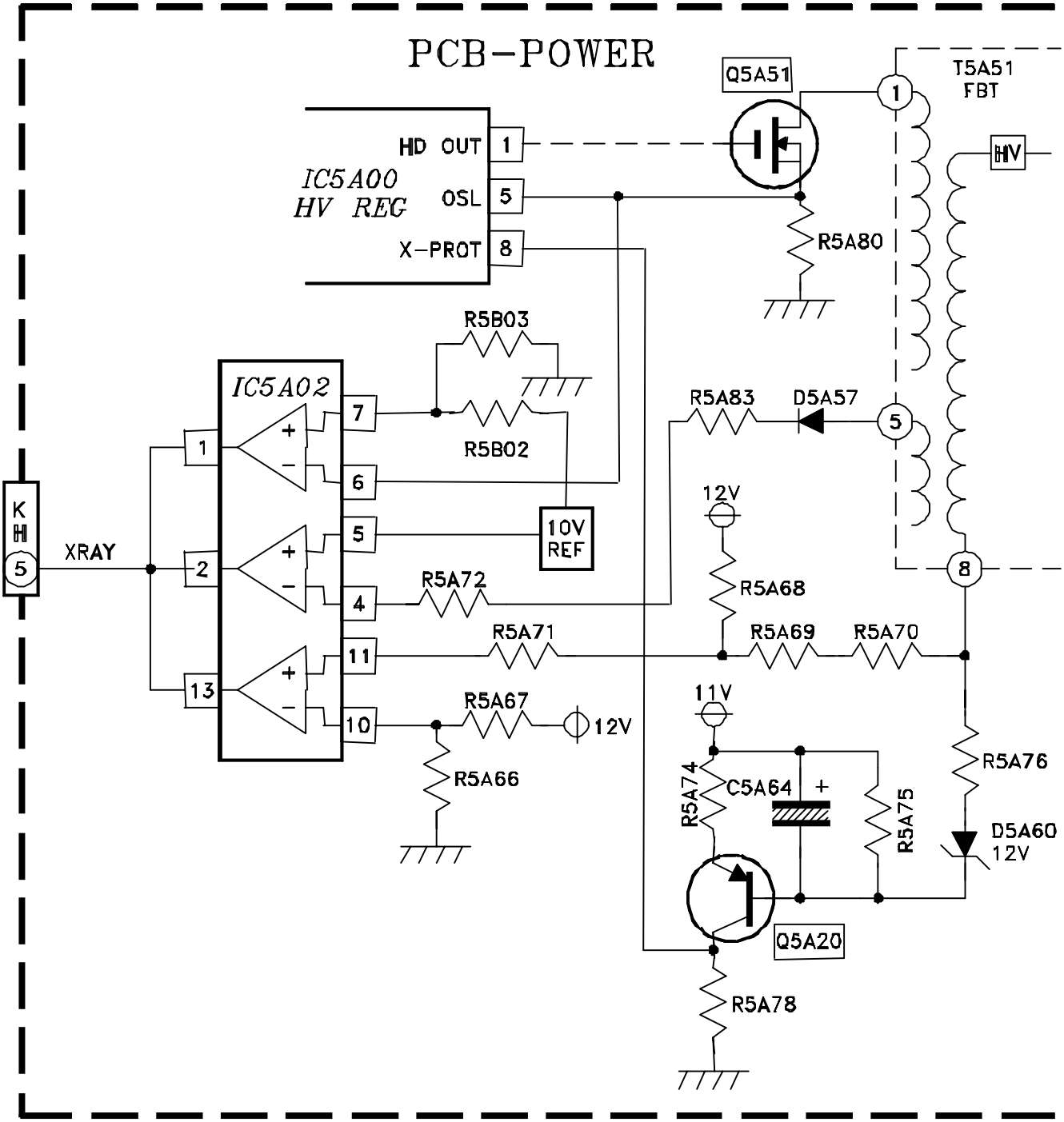

HV REGULATION

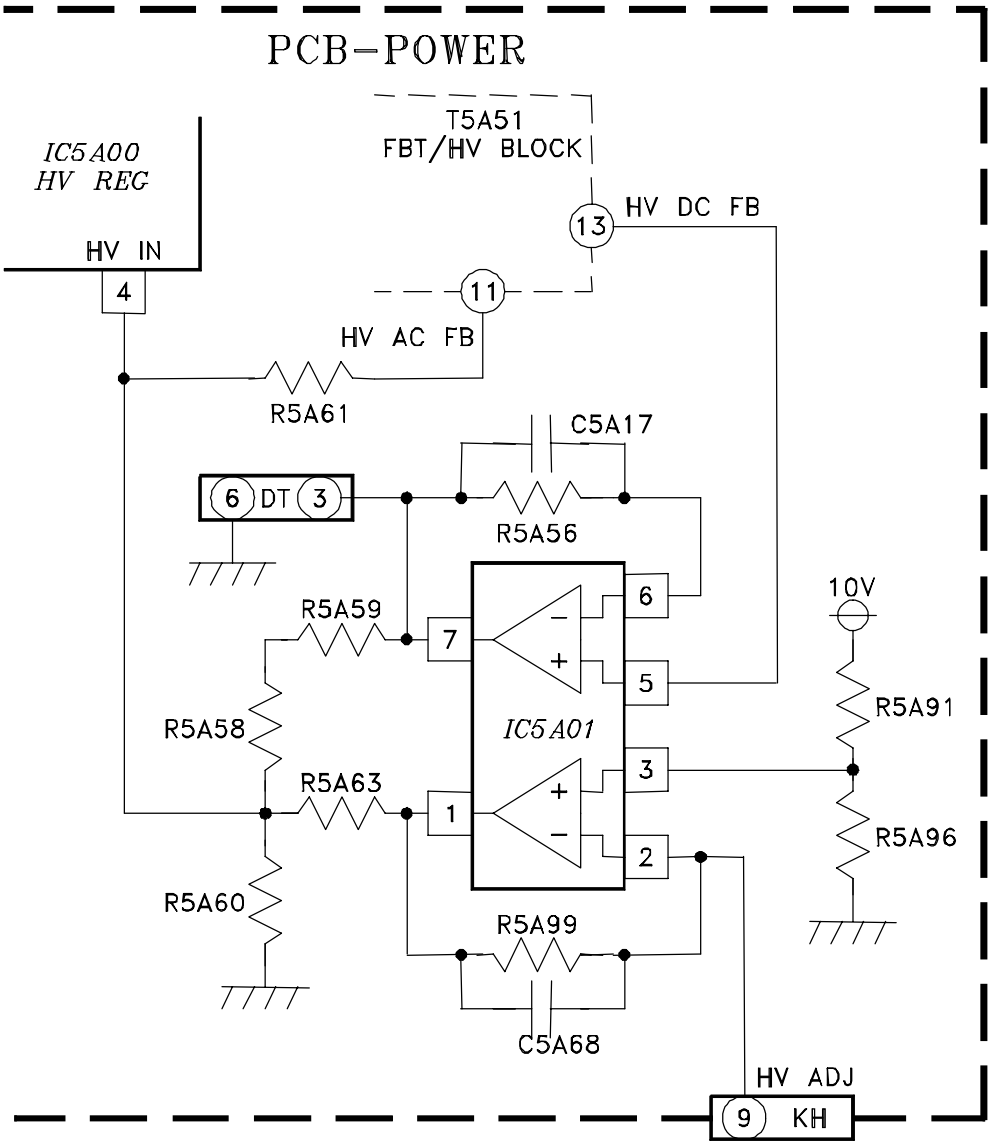

SOUND PATH

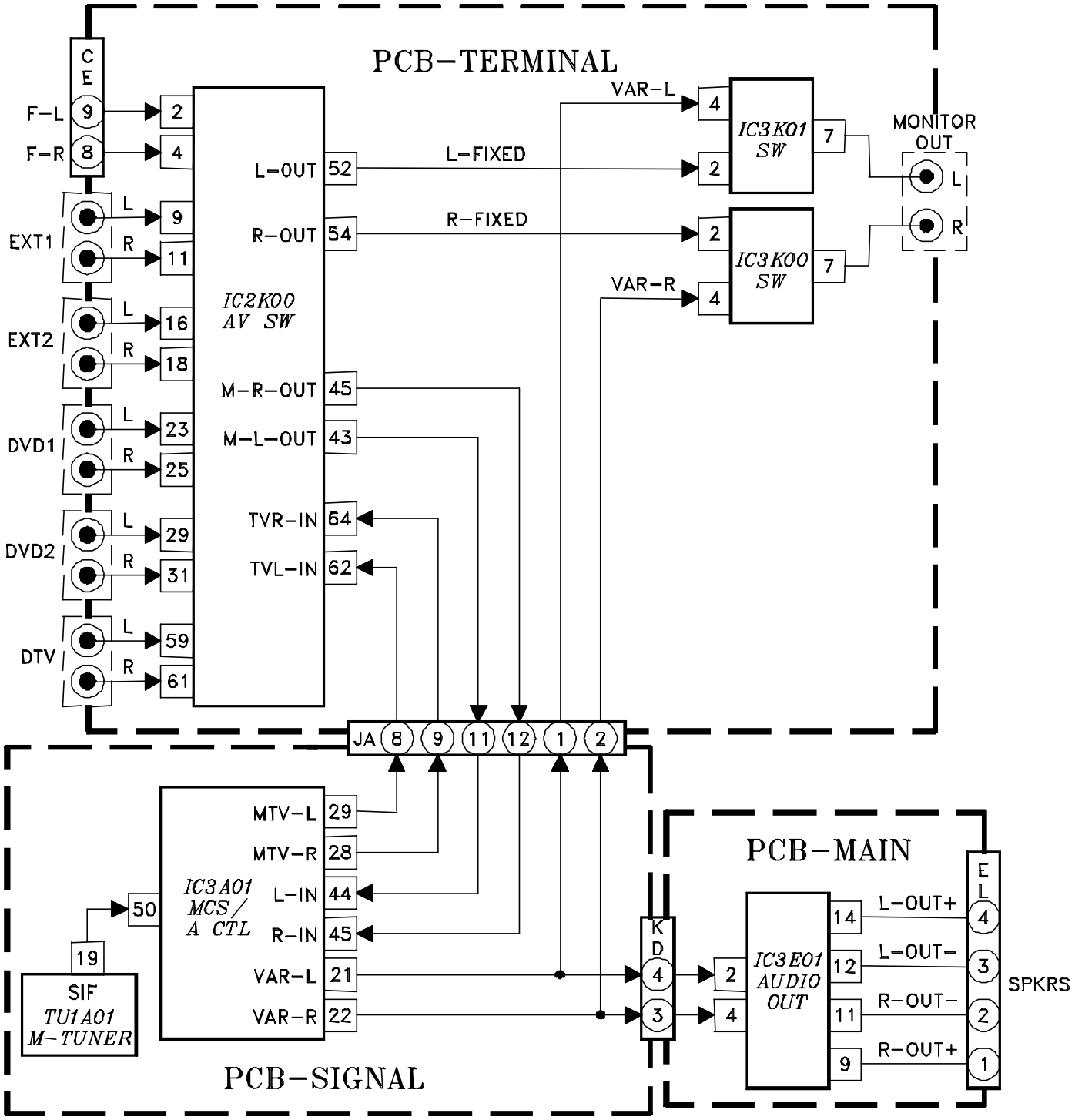
PCB−TERMINAL
C
E
F−L
F−R
EXT1
EXT2
DVD1
DVD2
DTV
L
R
IC2K00
AV SW
L−OUT
R−OUT
M−R−OUT
M−L−OUT
TVR−IN
TVL−IN
L−FIXED
R−FIXED
VAR−L
VAR−R
IC3K01
SW
IC3K00
SW
MONITOR
OUT
JA
PCB−MAIN
IC3A01
MCS/
A CTL
MTV−L
MTV−R
L−IN
R−IN
SIF
TU1A01
M−TUNER
PCB−SIGNAL
K
D
IC3E01
AUDIO
OUT
L−OUT+
L−OUT−
R−OUT−
R−OUT+
E
L
SPKRS

CONVERGENCE CIRCUIT

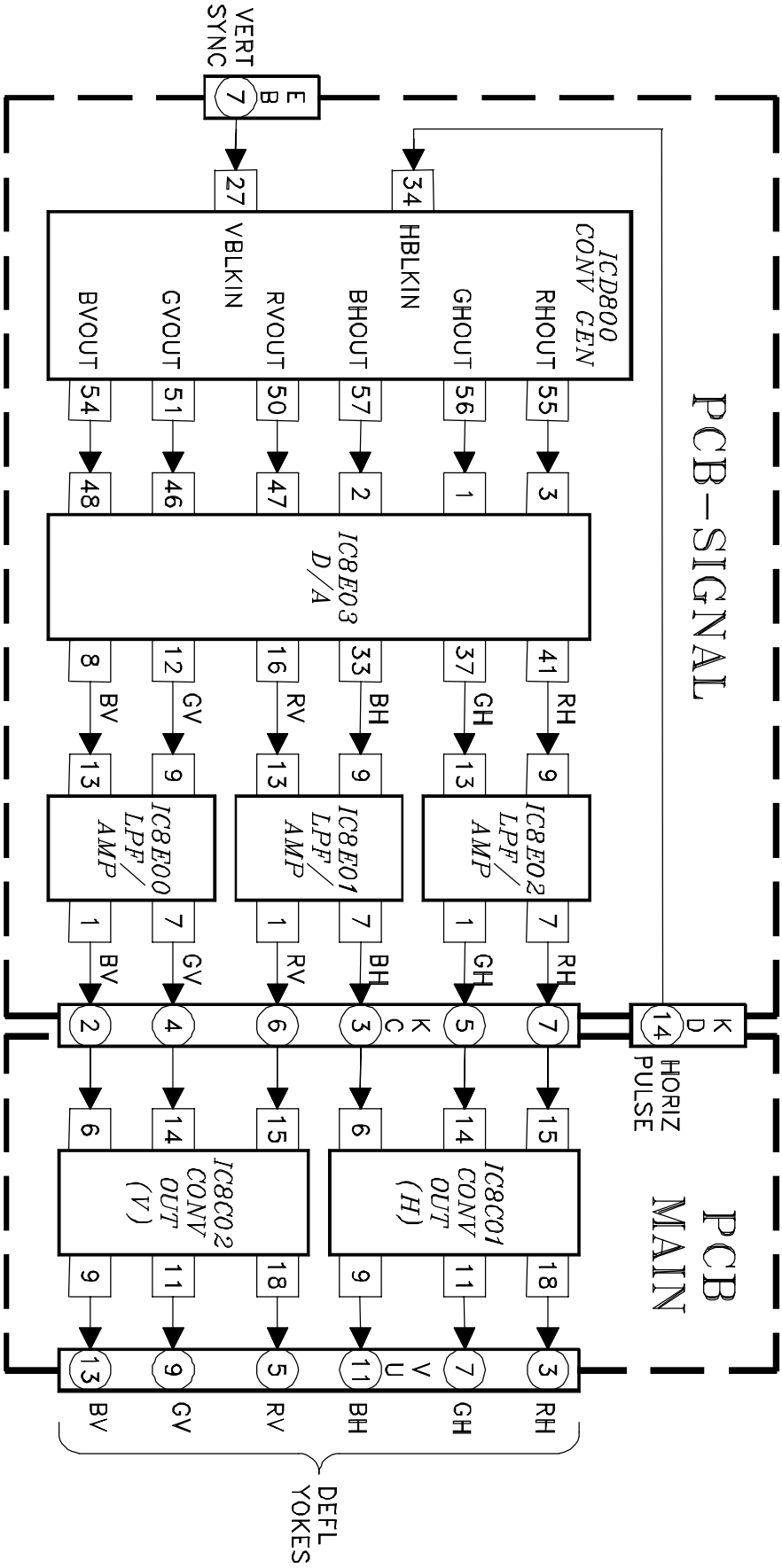

CONTROL CIRCUIT

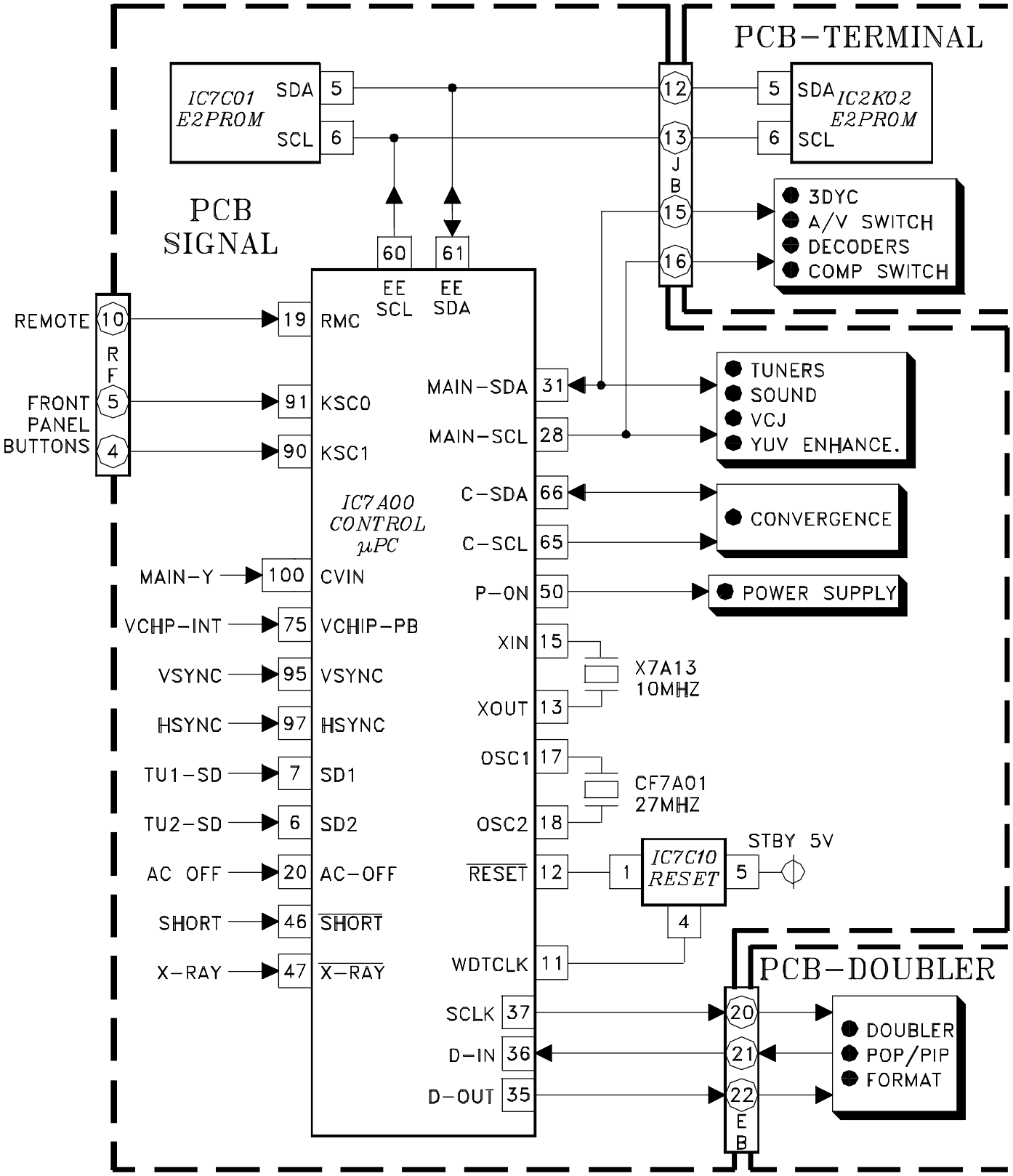

2002

MITSUBISHI ELECTRIC

Service Manual

PROJECTION TELEVISION
V20A / V20C / V20C+ CHASSIS

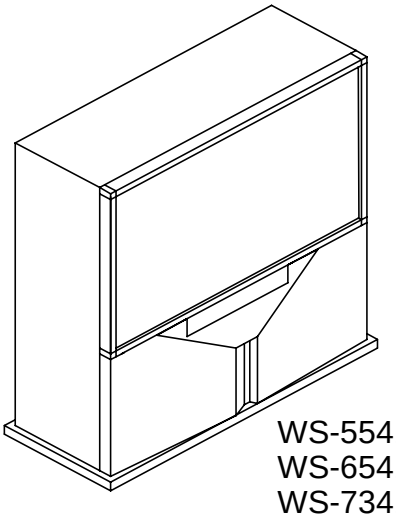

WS-55411
WS-65411
WS-73411

V20A MODELS	V20C MODELS	V20C MODELS
VS-50111	WS-48311	WS-55411
VS-60111	WS-55311	WS-65411
	WS-65311	WS-73411

CAUTION:
Before servicing this chassis, it is important that the service person read the "SAFETY PRECAUTIONS" and "PRODUCT SAFETY NOTICE" contained in this manual.

PART 2
SCHEMATIC DIAGRAMS

CONTENTS **Page**

Schematic Diagrams

Overall PCB Block Diagram 1
PCB-MAIN 2
PCB-POWER 3
PCB-TERMINAL (Input Switch) 4
PCV-TERMINAL (3DYC / Decoders 5
PCB-SIGNAL-1 (AV I/O) 6
PCB-SIGNAL-2 (MICRO) 7
PCB-SIGNAL-3 (VCJ) 8
PCB-SIGNAL- 4 (Convergence Generator 9
PCSs - FRONT / CONTROL / CRTs / PREAMP 10
PCB-2HDW-1 (Input) 11
PCB-2HDW-2 (Main) 12
PCB-2HDW-3 (Output) 13

Refer to PART 1 for:

- Specifications
- Safety Precautions
- Disassembly
- CRT Replacement
- Electrical Adjustments
- Parts List
- Block Diagrams

MITSUBISHI DIGITAL ELECTRONICS AMERICA, INC.
9351 Jeronimo Road, Irvine, CA 92618-1904

Copyright © 2002 Mitsubishi Digital Electronics America, Inc.
All Rights Reserved

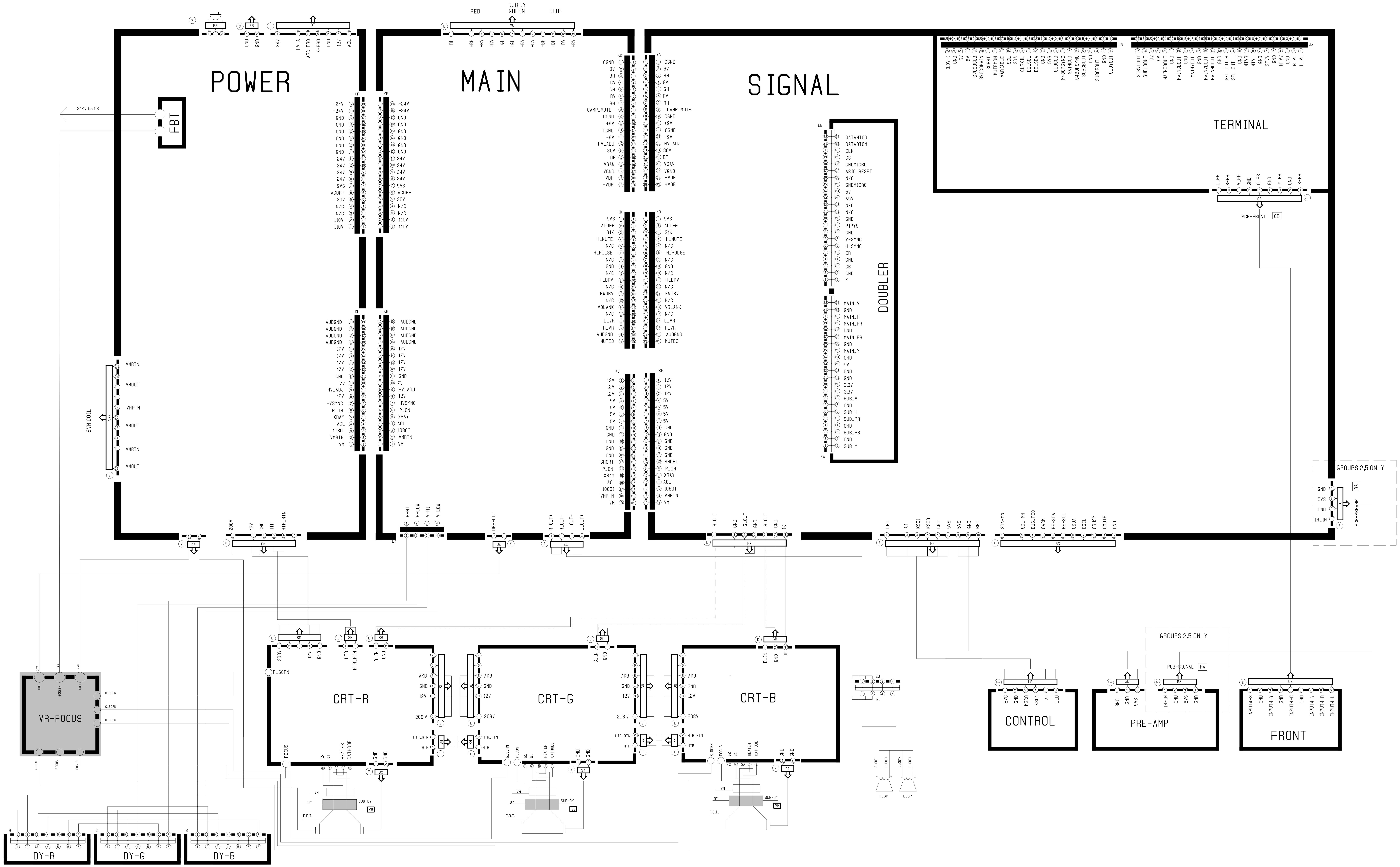

* NOTES

1. DC voltages were measured from points indicated to the circuit ground with a high-Z voltmeter.
2. Waveforms were taken with standard color bar signal
3. TP13, etc. show Test Points
4. CAPACITORS

Value	Not indicated		PF, for numbers more than 1 µF, for numbers less than 1
Dielectric Strength	Not indicated : 50V		
Tolerance	Not indicated = ±10% [No tolerance is indicated for electrolytic capacitors and ± 20%] G = ±2% P = +100% −0% Q = +30% −10% C = ±0.25PF J = ±5% Z = +80% −20% T = +200% −0% D = ±0.5PF K = ±10% F = ±1PF M = ±20% D = ±2PF		
Type	I	Parts except for chips	Not indicated : Ceramic capacitor MF : Polyester capacitor PP : Polypropylene film capacitor ALM : Aluminus electrolytic capacitor TF : Twin film capacitor SC : Semiconductor Ceramic capacitor MP : Metalized paper MPP : Metalized plastic film capacitor MMF : Metalized polyester capacitor MF,PP : Polyester polypropylene film capacitor PS : Styrol capacitor TAN or TANT : Tantalum capacitor +⊣⊢ : Electrolytic capacitor NP : Non polarized electrolytic capacitor
	II	Chips	Not indicated : Ceramic capacitor chip +⊣⊢ : Electrolytic capacitor NP : Non polarized electrolytic capacitor chip
Characteristic (only ceramic capacitor)	Not indicated : F or B (high dielectric percentage) CH, SL, etc. : Temperature compensating types		

5. RESISTORS

Value	Not indicated = Ohm K = 1,000 Ohm M = 1,000,000 Ohm		
Wattage	Parts except for chips	Not indicated = 1/4W or 1/8W	
	Chips	Not indicated = 1/8W	
Tolerance	Not indicated = ±5% D = ±0.5% J = ±5% F = ±1% K = ±10%		
Type	I	Parts except for chips	Not indicated : Carbon resistor S : Fixed composition resistor MB : Metal oxide film resistor (type B) CE : Cemented resistor W : Wire wound resistor M : Metal film resistor MPC : Metal plate cement resistor ML : Metal liner resistor
	II	Chip	Not indicated : Chip resistor

6. This is a basic schematic diagram. Some sets may be subject to modification according to engineering improvement.

SHADED COMPONENTS HAVE SPECIAL CHARACTERISTICS IMPORTANT TO SAFETY. BEFORE REPLACING ANY OF THESE COMPONENTS READ CAREFULLY THE PRODUCT SAFETY NOTICE IN THE SERVICE MANUAL. DON'T DEGRADE THE SAFETY OF THE RECEIVERS THROUGH IMPROPER SERVICING.

SERVICE TECHNICIAN WARNING:
X-RADIATION PRECAUTION
THIS PRODUCT INCLUDES CRITICAL ELECTRICAL AND MECHANICAL PARTS ESSENTIAL FOR X-RADIATION PROTECTION.
TO AVOID POSSIBLE EXPOSURE TO X-RADIATION TAKE X-RADIATION PROTECTIVE MEASURES FOR PERSONNEL DURING SERVICING.
SEE SERVICE INSTRUCTIONS FOR SPECIFIED REPLACEMENT PARTS AND SERVICE ADJUSTMENTS.

CONTENTS

PG.1.... BLOCK DIAGRAM
PG.2.... MAIN
PG.3.... POWER
PG.4.... TERMINAL-1 (INPUT SW)
PG.5.... TERMINAL-2 (3DYC)
PG.6.... SIGNAL-1 (AV I/O)
PG.7.... SIGNAL-2 (MICRO)
PG.8.... SIGNAL-3 (VIDEO/CHROMA)
PG.9.... SIGNAL-4 (CONV GEN)
PG.10.. CRT/CONTROL/FRONT/PREAMP
PG.11.. DOUBLER-1 (IN)
PG.12.. DOUBLER-2 (MAIN)
PG.13.. DOUBLER-3 (OUT)

GROUP	MODEL
1	WS-55311 , WS-65311
2	WS-55411, WS-65411
3	VS-50111
4	VS-60111
5	WS-73411
6	WS-48311

∗∗∗Masked∗∗∗Model# WS-55311 (PAGE 1) ∗∗ This is printed in BLACK ink ∗∗∗Masked∗∗∗∗∗

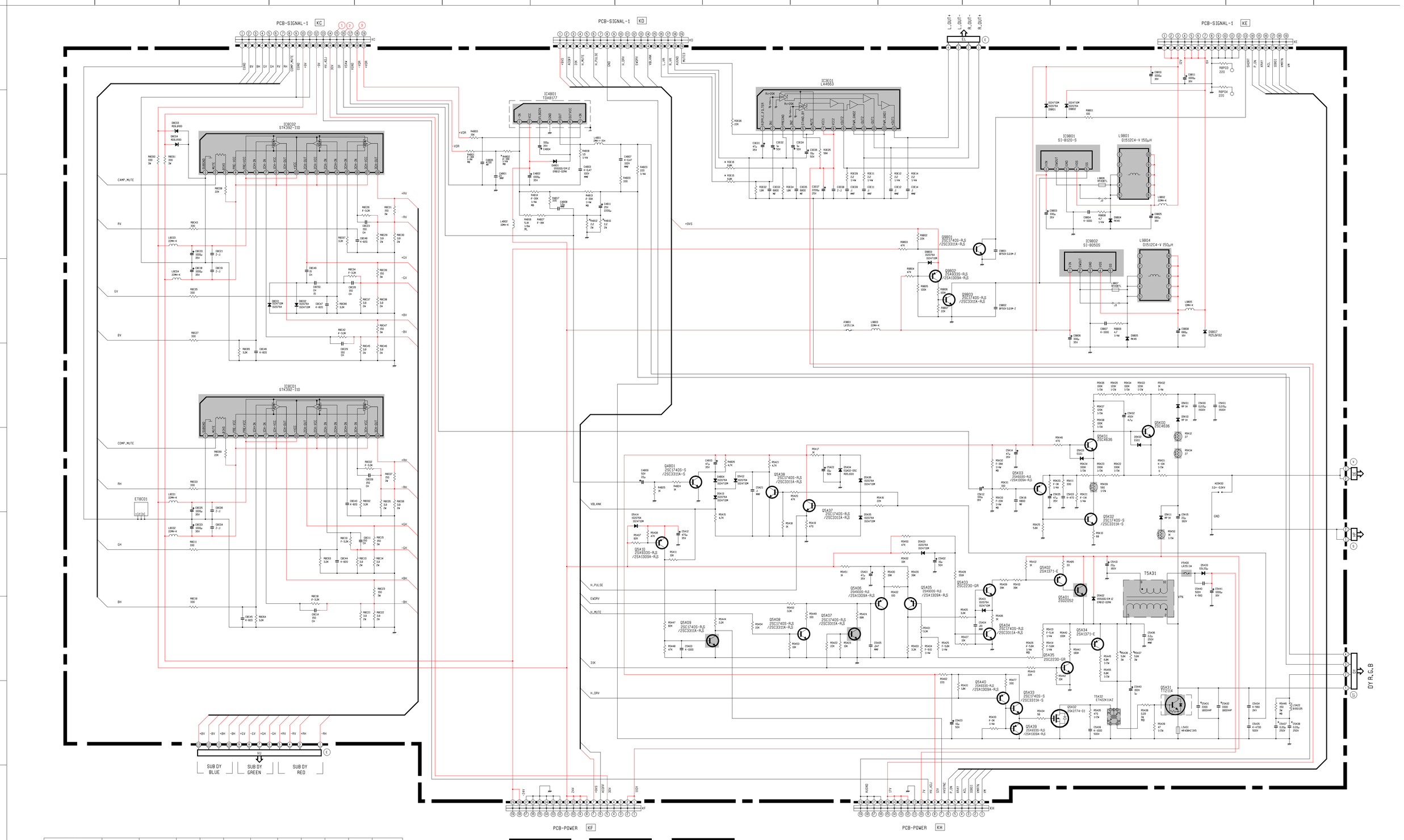

MODELS	C5A37	C5A38	R5A36	R5A37	C5A31	C5A32	R4B10	R4B12	R3E15	R3E16	L5A22
WS-55311,WS-48311	250V .27 MPP	250V .27 MPP	5.6k 3W	5.6k 3W	3300 1800VHP	3300 1800VHP	2.2 2W	2.2 2W	6.8k	6.8k	059-20
VS-50111,VS-60111	250V .33 MPP	250V .33 MPP	5.6k 3W	5.6k 3W	3300 1800VHP	3300 1800VHP	1.8 2W	1.8 2W	10k	10k	059-20
WS-55411,WS-65311					3900 1800VHP	3900 1800VHP	2.2 2W	2.2 2W	6.8k	6.8k	059-30
WS-73411					3900 1800VHP	3900 1800VHP	2.2 2W	2.2 2W	6.8k	6.8k	059-30

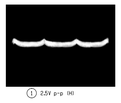

① 2.5V p-p (H)

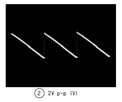

② 2V p-p (V)

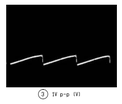

③ 1V p-p (V)

CONTENTS

PG.1..... BLOCK DIAGRAM
PG.2..... MAIN
PG.3..... POWER
PG.4..... TERMINAL-1 (INPUT SW)
PG.5..... TERMINAL-2 (3DYC)
PG.6..... SIGNAL-1 (AV I/O)
PG.7..... SIGNAL-2 (MICRO)
PG.8..... SIGNAL-3 (VIDEO/CHROMA)
PG.9..... SIGNAL-4 (CONV GEN)
PG.10.. CRT/CONTROL/FRONT/PREAMP
PG.11.. DOUBLER-1 (IN)
PG.12.. DOUBLER-2 (MAIN)
PG.13.. DOUBLER-3 (OUT)

GROUP	MODEL
1	WS-55311 WS-65311
2	WS-55411 WS-65411
3	VS-50111
4	VS-60111
5	WS-73411
6	WS-48311

**********Maskedd********Modell### WGS-55531111 (PPAGEE 22) *** This iss pprimittedd im BLEADC Kn in * ********

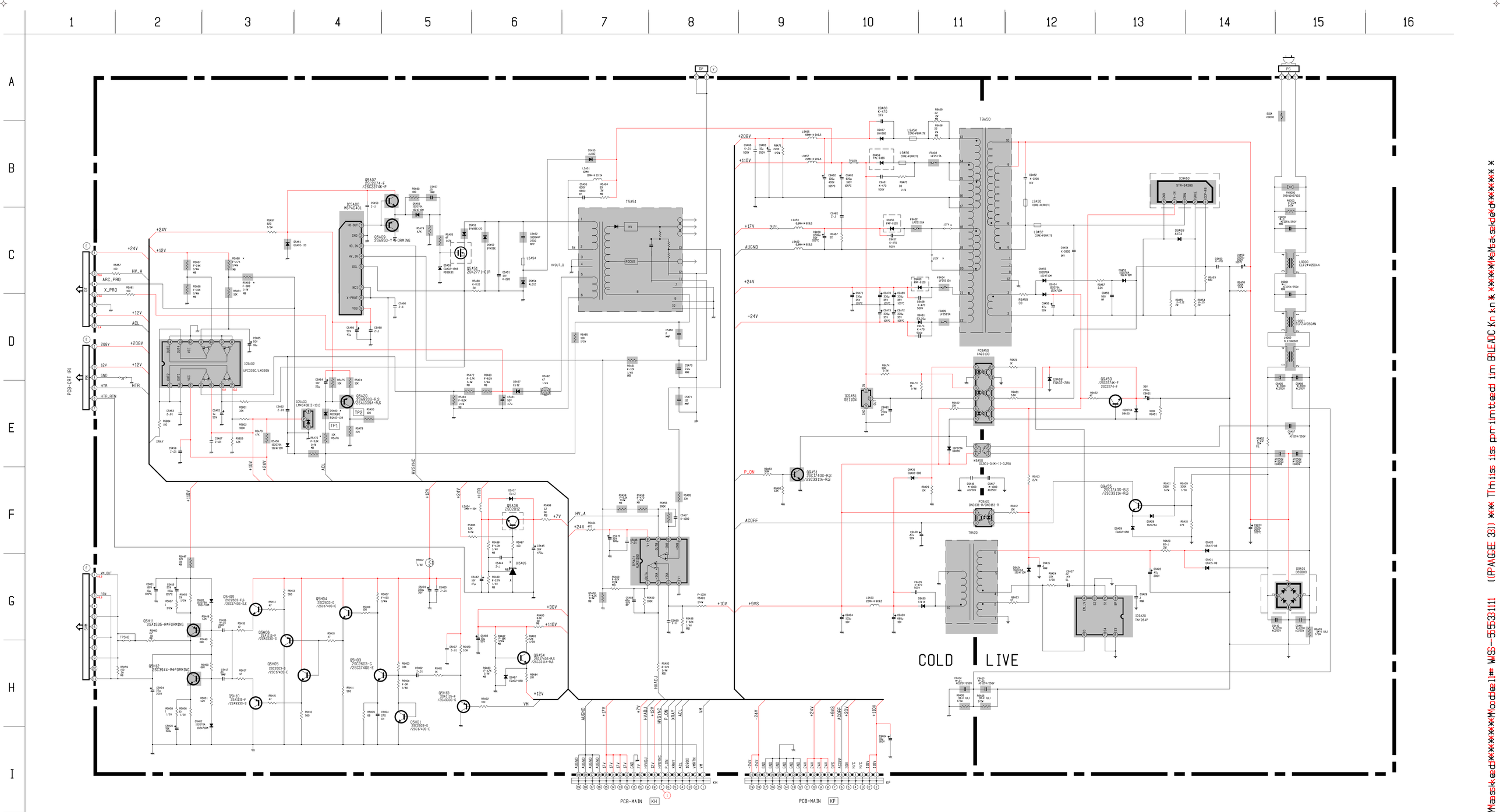

MODELS	J12V	J17V	R5A68	R5A69	R5A70	D5A60	RBP05	RBP06
WS55311 WS48311	X	O	F-2.7K	F-680	F-3.3K	RD13EB2	220	220
VS50111 VS60111	O	X	F-2.7K	F-680	F-3.3K	RD13EB2	220	470
WS55411 WS65311	X	O	F-2.7K	F-680	F-3.3K	RD13EB2	220	220
WS-73411	X	O	F-2.0K	F-560	F-2.4K	RD9.1EB1,B2	220	1k

CONTENTS

PG.1.... BLOCK DIAGRAM
PG.2.... MAIN
PG.3.... POWER
PG.4.... TERMINAL-1 (INPUT SW)
PG.5.... TERMINAL-2 (SDYC)
PG.6.... SIGNAL-1 (AV I/O)
PG.7.... SIGNAL-2 (MICRO)
PG.8.... SIGNAL-3 (VIDEO/CHROMA)
PG.9.... SIGNAL-4 (CONV GEN)
PG.10.. CRT/CONTROL/FRONT/PREAMP
PG.11.. DOUBLER-1 (IN)
PG.12.. DOUBLER-2 (MAIN)
PG.13.. DOUBLER-3 (OUT)

GROUP	MODEL
1	WS-55311 WS-65311
2	WS-55411,WS-65411
3	VS-50111
4	VS-60111
5	WS-73411
6	WS-48311

*****Masked****Model# WS-55531111 (PAGE 33) *** This iss primitted in BLEADC Kn in * ****Mad-sked****

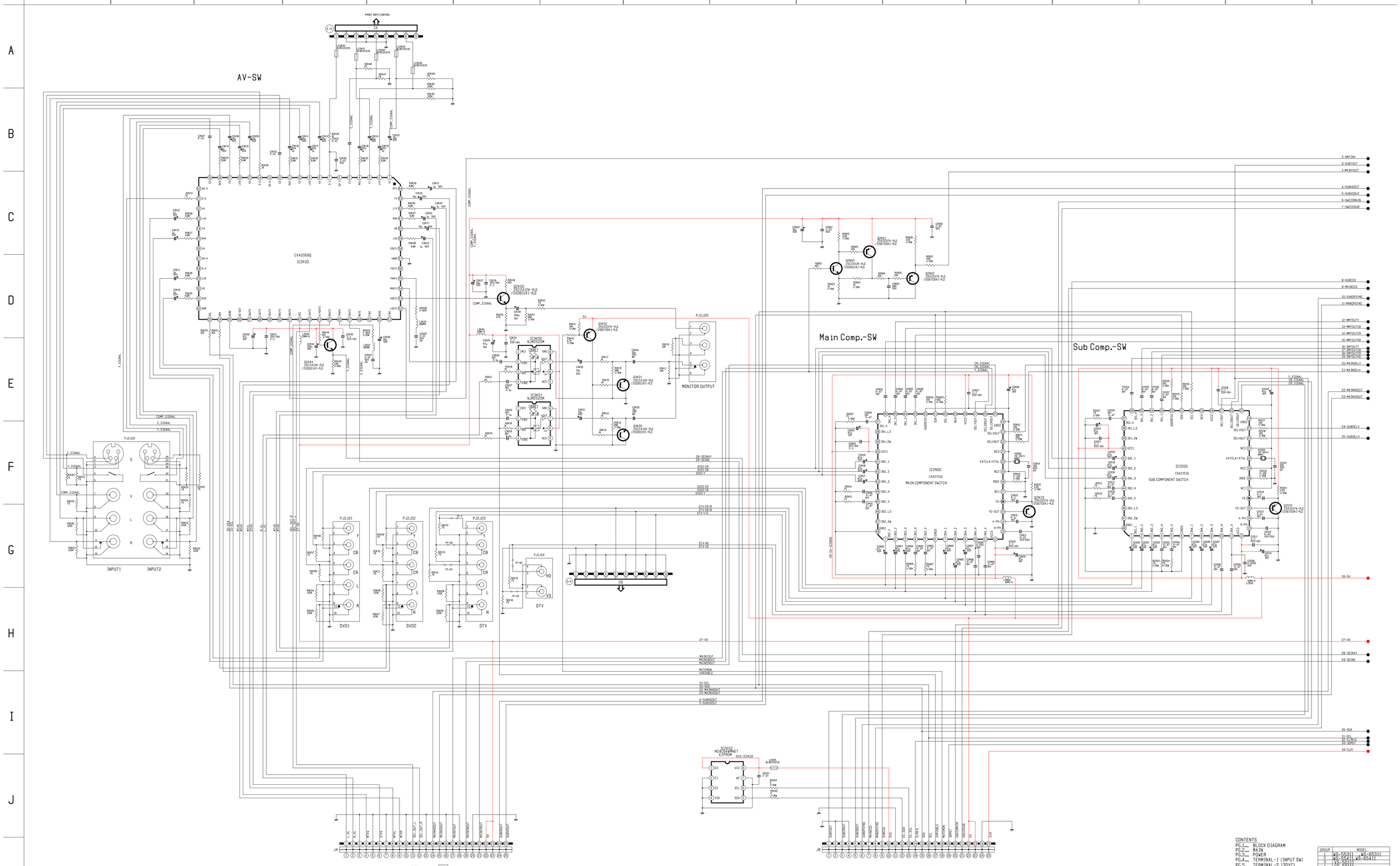

CONTENTS

PG.1.... BLOCK DIAGRAM
PG.2.... MAIN
PG.3.... POWER
PG.4.... TERMINAL-1 (INPUT SW)
PG.5.... TERMINAL-2 (3DYC)
PG.6.... SIGNAL-1 (AV I/O)
PG.7.... SIGNAL-2 (MICRO)
PG.8.... SIGNAL-3 (VIDEO/CHROMA)
PG.9.... SIGNAL-4 (CONV GEN)
PG.10.. CRT/CONTROL/FRONT/PREAMP
PG.11.. DOUBLER-1 (IN)
PG.12.. DOUBLER-2 (MAIN)
PG.13.. DOUBLER-3 (OUT)

GROUP	MODEL	
1	WS-55311	WS-65311
2	WS-5541L	WS-6541L
3	VS-50111	
4	VS-40111	
5	WS-7241L	
6	WS-4831L	

* EXCEPT WHERE NOTED, ALL OPEN-ENDED CIRCUIT PATHS CONNECT TO THE TERMINAL-2 SCHEMATIC

**** Thiis ppr imtted im BLEADC Kn tn * ****Masked**** (PAGE 41) *** Thi ****Model# WS-55311 ****

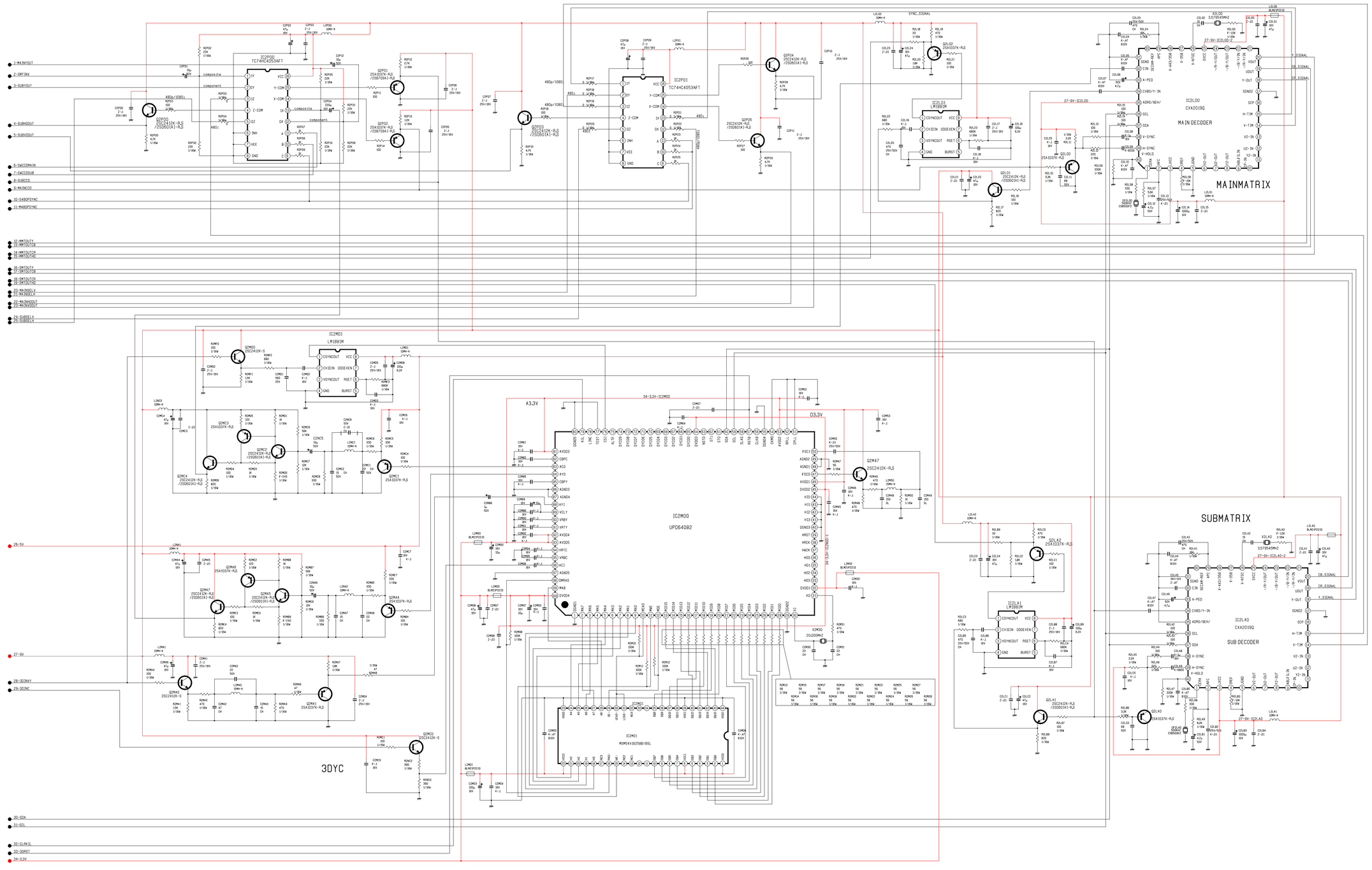

CONTENTS

PG.1.... BLOCK DIAGRAM
PG.2.... MAIN
PG.3.... POWER
PG.4.... TERMINAL-1 (INPUT SW)
PG.5.... TERMINAL-2 (3DYC)
PG.6.... SIGNAL-1 (AV I/O)
PG.7.... SIGNAL-2 (MICRO)
PG.8.... SIGNAL-3 (VIDEO/CHROMA)
PG.9.... SIGNAL-4 (CONV CEN)
PG.10... CRT/CONTROL/FRONT/PREAMP
PG.11.. DOUBLER-1 (IN)
PG.12.. DOUBLER-2 (MAIN)
PG.13.. DOUBLER-3 (OUT)

GROUP	MODEL	
1	WS-55311	WS-65311
2	WS-55411	WS-65411
3	WS-59111	
4	WS-68111	
5	WS-73411	
6	WS-48311	

* EXCEPT WHERE NOTED, ALL OPEN-ENDED CIRCUIT PATHS CONNECT TO THE TERMINAL-1 SCHEMATIC

**********Maskhead**********Model]# WS-55531111 ((PAGE 55)) *** This is primitive jim BLEADC Kn in *****Mad-skldd*****

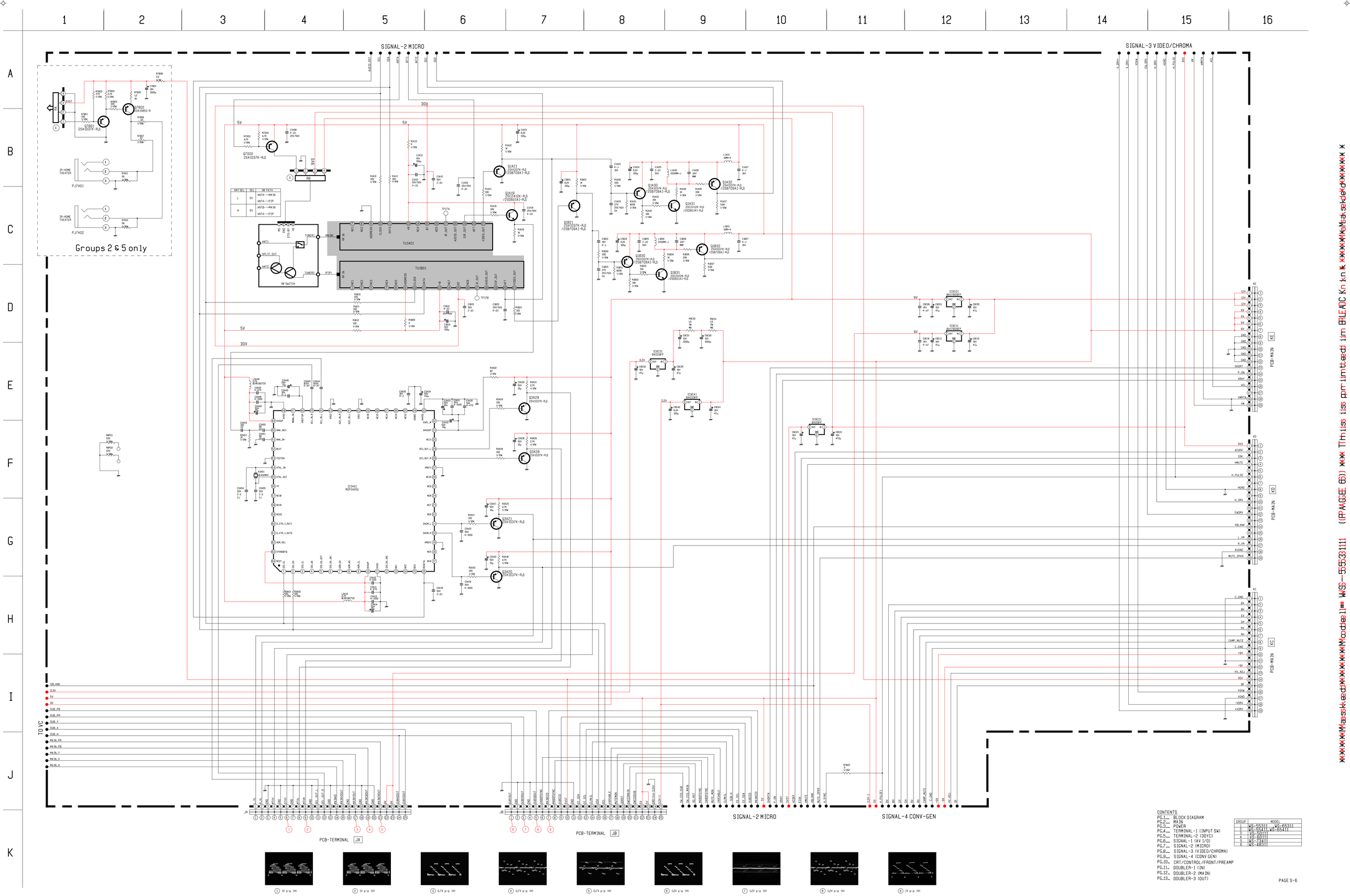

CONTENTS

PG.1.... BLOCK DIAGRAM
PG.2.... MAIN
PG.3.... POWER
PG.4.... TERMINAL-1 (INPUT SW)
PG.5.... TERMINAL-2 (3DYC)
PG.6.... SIGNAL-1 (AV I/O)
PG.7.... SIGNAL-2 (MICRO)
PG.8.... SIGNAL-3 (VIDEO/CHROMA)
PG.9.... SIGNAL-4 (CONV GEN)
PG.10.. CRT/CONTROL/FRONT/PREAMP
PG.11.. DOUBLER-1 (IN)
PG.12.. DOUBLER-2 (MAIN)
PG.13.. DOUBLER-3 (OUT)

GROUP	MODEL	
1	WS-55911	WS-65911
2	WS-5541,	WS-6541,
3	WS-5911	
4	VS-8011	
5	WS-7941	
6	WS-4831	

*****Maskedd*****Model# WS-55531111 (PAGE 6)) *** This iss primitted jim BLEADC (n in * ****Vbd-sk0d0d*****

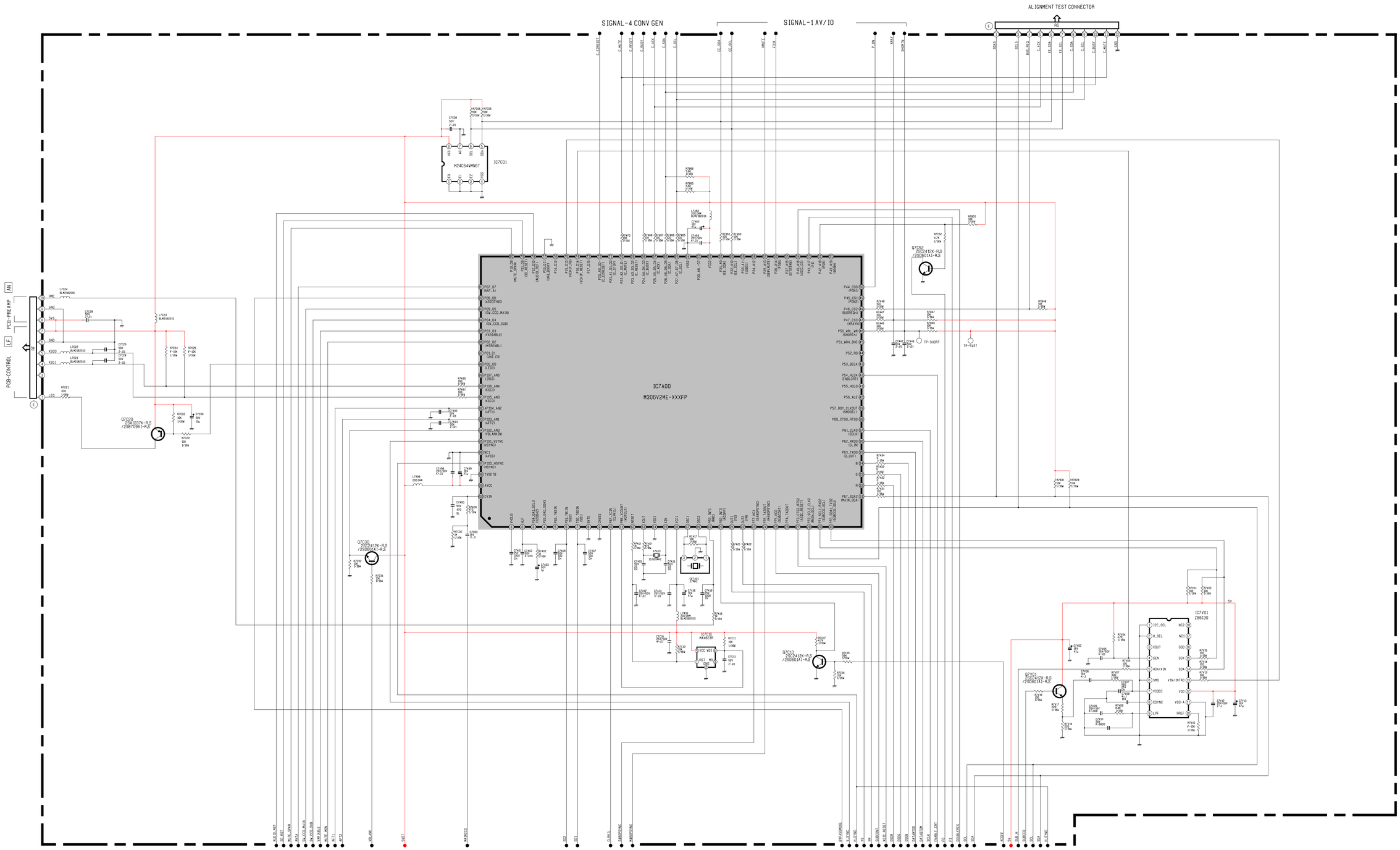

	VS-50111	VS-60111	WS-48311	WS-55311	WS-55411	WS-65311	WS-73411
R7A51	—	—	○	○	○	○	○
R7B51	○	○	—	—	—	—	—
R7A55	—	—	—	—	○	—	○
R7B55	○	○	○	○	—	○	—
R7A39	—	—	—	—	—	—	—

CONTENTS

PG.1.... BLOCK DIAGRAM
PG.2.... MAIN
PG.3.... POWER
PG.4.... TERMINAL-1 (INPUT SW)
PG.5.... TERMINAL-2 (3DYC)
PG.6.... SIGNAL-1 (AV I/O)
PG.7.... SIGNAL-2 (MICRO)
PG.8.... SIGNAL-3 (VIDEO/CHROMA)
PG.9.... SIGNAL-4 (CONV GEN)
PG.10.. CRT/CONTROL/FRONT/PREAMP
PG.11.. DOUBLER-1 (IN)
PG.12.. DOUBLER-2 (MAIN)
PG.13.. DOUBLER-3 (OUT)

GROUP	MODEL
1	WS-55311 WS-65311
2	WS-55411 WS-65411
3	VS-50111
4	VS-60111
5	WS-73411
6	WS-48311

**********Maskedd********Moddel# WS-55531111 (PAGE 7)) *** This iss pprimtted im BLEADC Kn kn * ********Ma-skdd*******

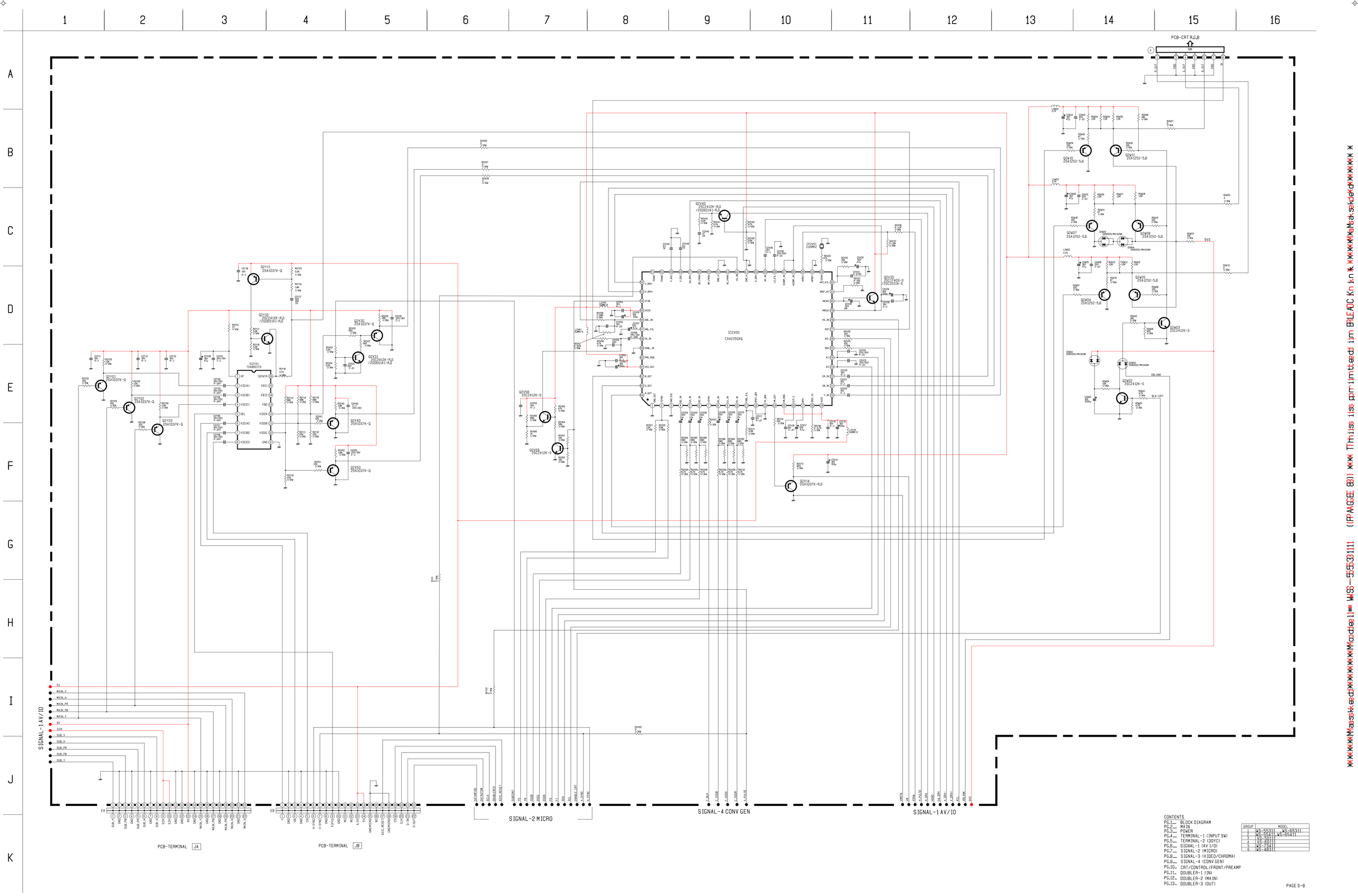

CONTENTS

PG.1.... BLOCK DIAGRAM
PG.2.... MAIN
PG.3.... POWER
PG.4.... TERMINAL-1 (INPUT SW)
PG.5.... TERMINAL-2 (3DYC)
PG.6.... SIGNAL-1 (AV I/O)
PG.7.... SIGNAL-2 (MICRO)
PG.8.... SIGNAL-3 (VIDEO/CHROMA)
PG.9.... SIGNAL-4 (CONV GEN)
PG.10.. CRT/CONTROL/FRONT/PREAMP
PG.11.. DOUBLER-1 (IN)
PG.12.. DOUBLER-2 (MAIN)
PG.13.. DOUBLER-3 (OUT)

GROUP	MODEL
1	WS-55511 WS-65511
2	WS-5541 WS-6541
3	WS-5511
4	VS-6011
5	WS-7541
6	WS-4841

*****Maskedd***********Model# WS-55531111 (PAGE 8)) *** This iss printtedd in BLACK ink ***********

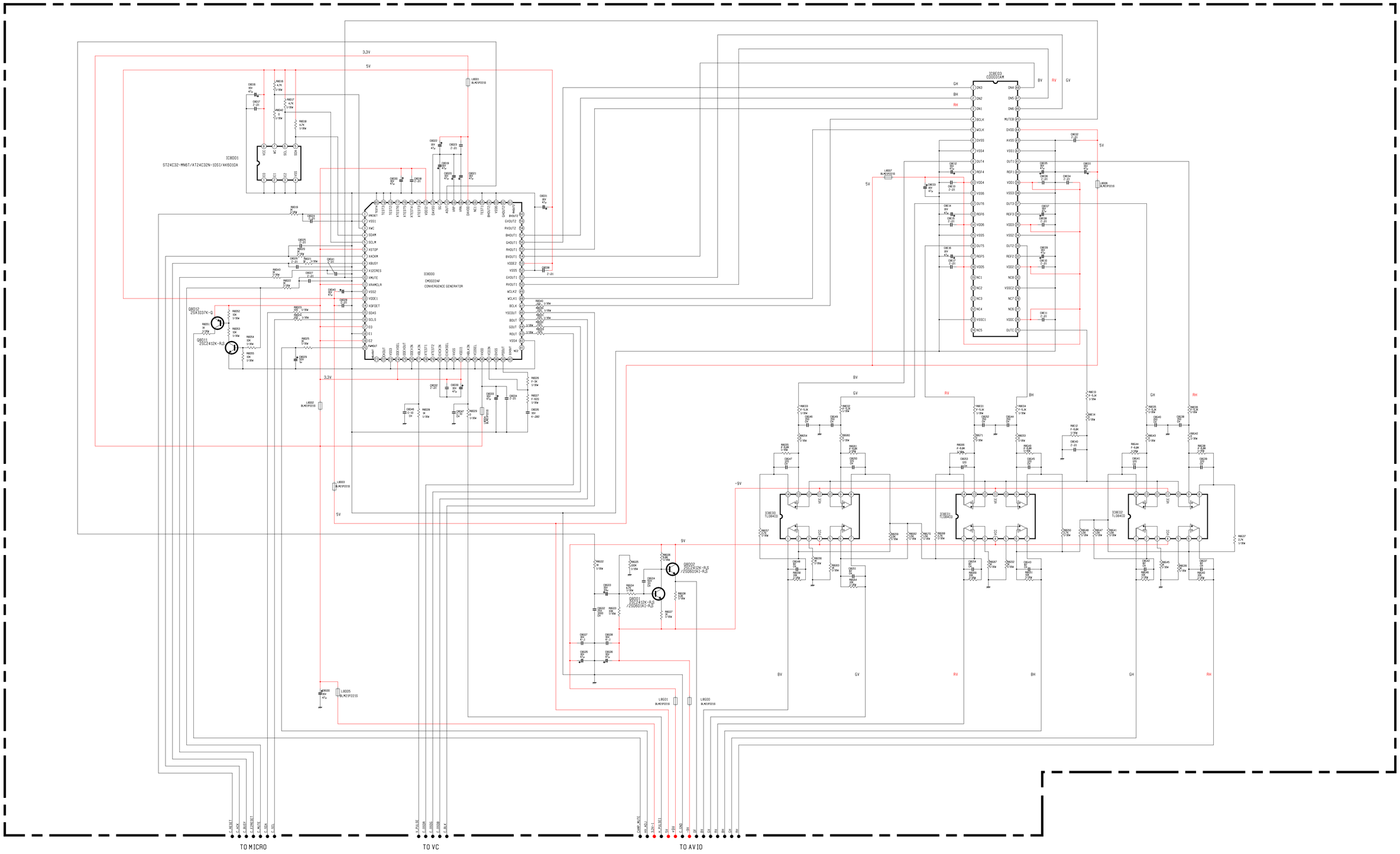

CONTENTS

PG.1.... BLOCK DIAGRAM
PG.2.... MAIN
PG.3.... POWER
PG.4.... TERMINAL-1 (INPUT SW)
PG.5.... TERMINAL-2 (SDYC)
PG.6.... SIGNAL-1 (AV I/O)
PG.7.... SIGNAL-2 (MICRO)
PG.8.... SIGNAL-3 (VIDEO/CHROMA)
PG.9.... SIGNAL-4 (CONV GEN)
PG.10.. CRT/CONTROL/FRONT/PREAMP
PG.11.. DOUBLER-1 (IN)
PG.12.. DOUBLER-2 (MAIN)
PG.13.. DOUBLER-3 (OUT)

GROUP	MODEL
1	WS-55311 WS-65311
2	WS-5541,WS-65411
3	VS-30111
4	VS-60111
5	WS-72611
6	WS-48311

**********Masskeadt********Model# WS-55531111 (PAGE 09) *** This iss proprimtted jim BLEADC Kn tn * ****Vbd-skldd*****

DATE TIME=3-14-2002,1361

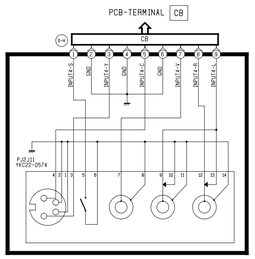

PCB-FRONT

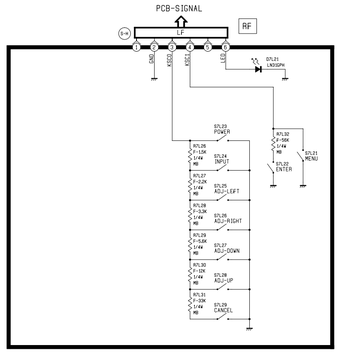

PCB-CONTROL

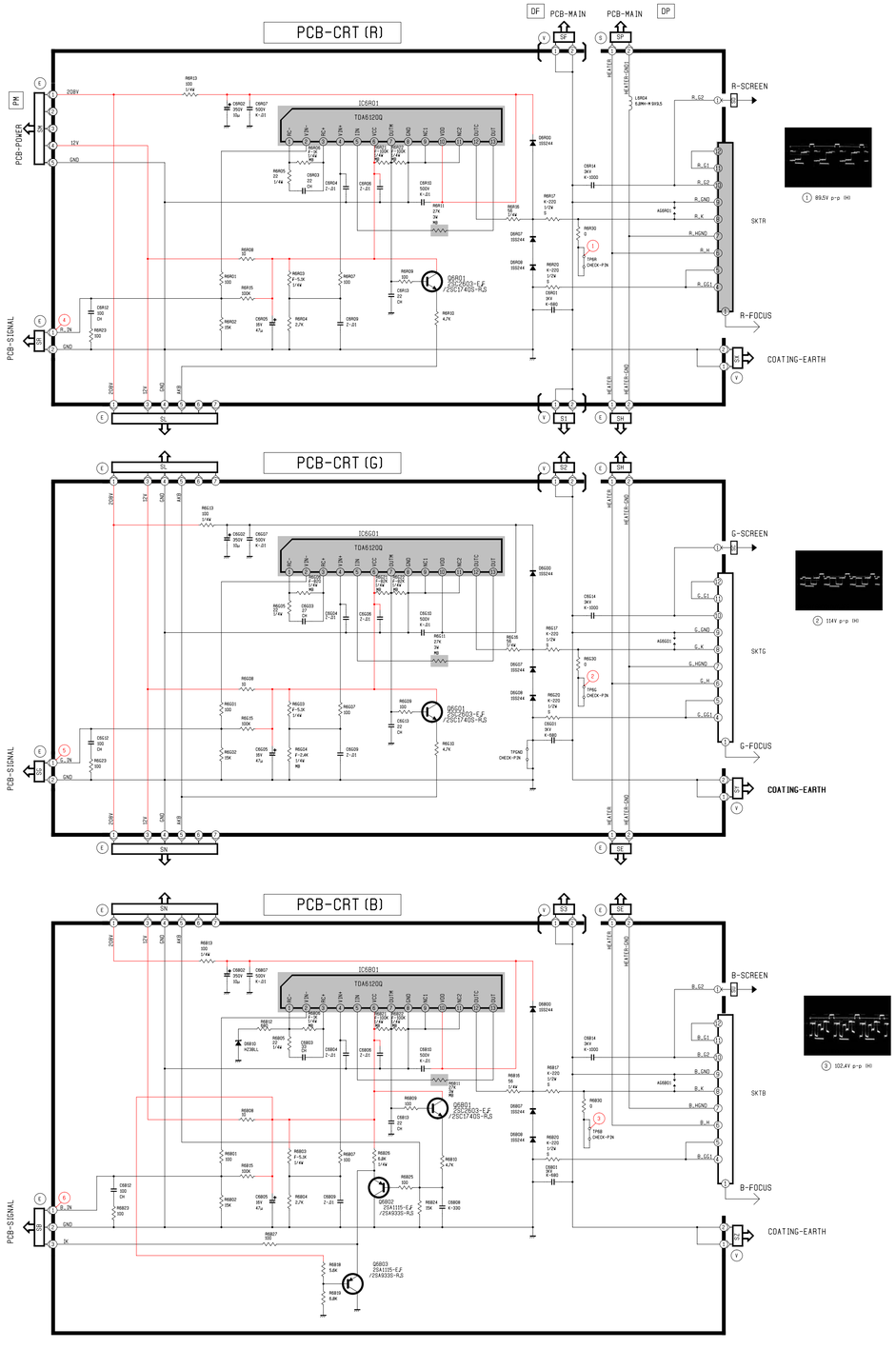

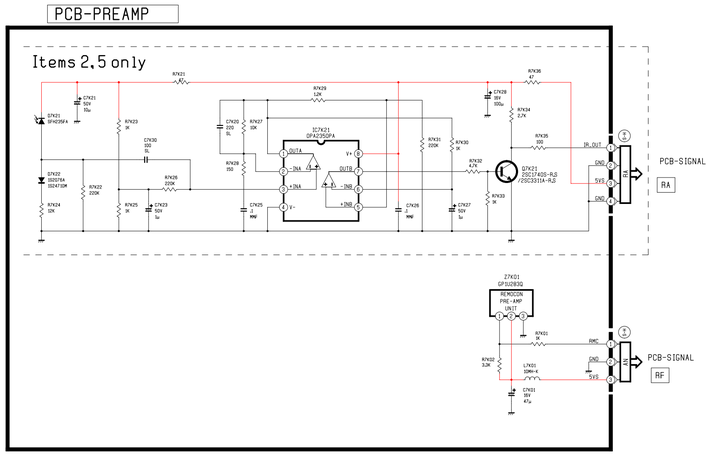

CONTENTS

PG.1.... BLOCK DIAGRAM
PG.2.... MAIN
PG.3.... POWER
PG.4.... TERMINAL-1 (INPUT SW)
PG.5.... TERMINAL-2 (SDYC)
PG.6.... SIGNAL-1 (AV I/O)
PG.7.... SIGNAL-2 (MICRO)
PG.8.... SIGNAL-3 (VIDEO/CHROMA)
PG.9.... SIGNAL-4 (CONV GEN)
PG.10.. CRT/CONTROL/FRONT/PREAMP
PG.11.. DOUBLER-1 (IN)
PG.12.. DOUBLER-2 (MAIN)
PG.13.. DOUBLER-3 (OUT)

GROUP	MODEL
1	WS-55311 , WS-65311
2	WS-55411 ,WS-65411
3	WS-5011
4	WS-7011
5	WS-7911
6	WS-4811

(PPAGE 100) *** This is pr:intted im BRLADC Kn tn *****Mad sed d*****
*****Masked*****Model# WS-55311 ****

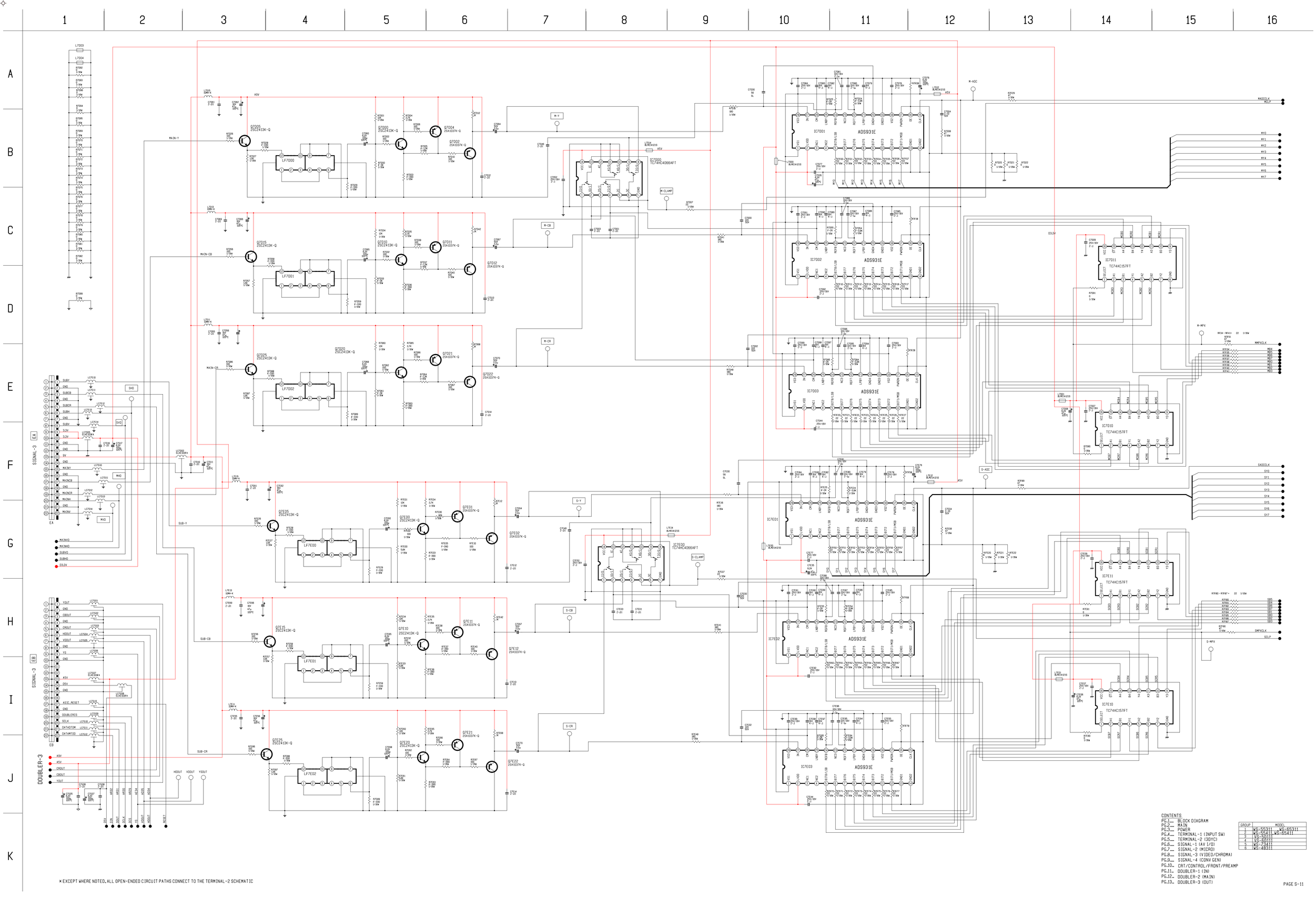

CONTENTS

PG.1.... BLOCK DIAGRAM
PG.2.... MAIN
PG.3.... POWER
PG.4.... TERMINAL-1 (INPUT SW)
PG.5.... TERMINAL-2 (3DYC)
PG.6.... SIGNAL-1 (AV I/O)
PG.7.... SIGNAL-2 (MICRO)
PG.8.... SIGNAL-3 (VIDEO/CHROMA)
PG.9.... SIGNAL-4 (CONV GEN)
PG.10.. CRT/CONTROL/FRONT/PREAMP
PG.11.. DOUBLER-1 (IN)
PG.12.. DOUBLER-2 (MAIN)
PG.13.. DOUBLER-3 (OUT)

GROUP	MODEL
1	WS-55311 WS-65311
2	WS-55411 WS-65411
3	WS-50111
4	WS-60111
5	WS-72411
6	WS-48311

* EXCEPT WHERE NOTED, ALL OPEN-ENDED CIRCUIT PATHS CONNECT TO THE TERMINAL-2 SCHEMATIC

(11) *** This is primitive BREAD Kn ***Mastered*** (PAGE 11) *** Model# WS-55311 ***

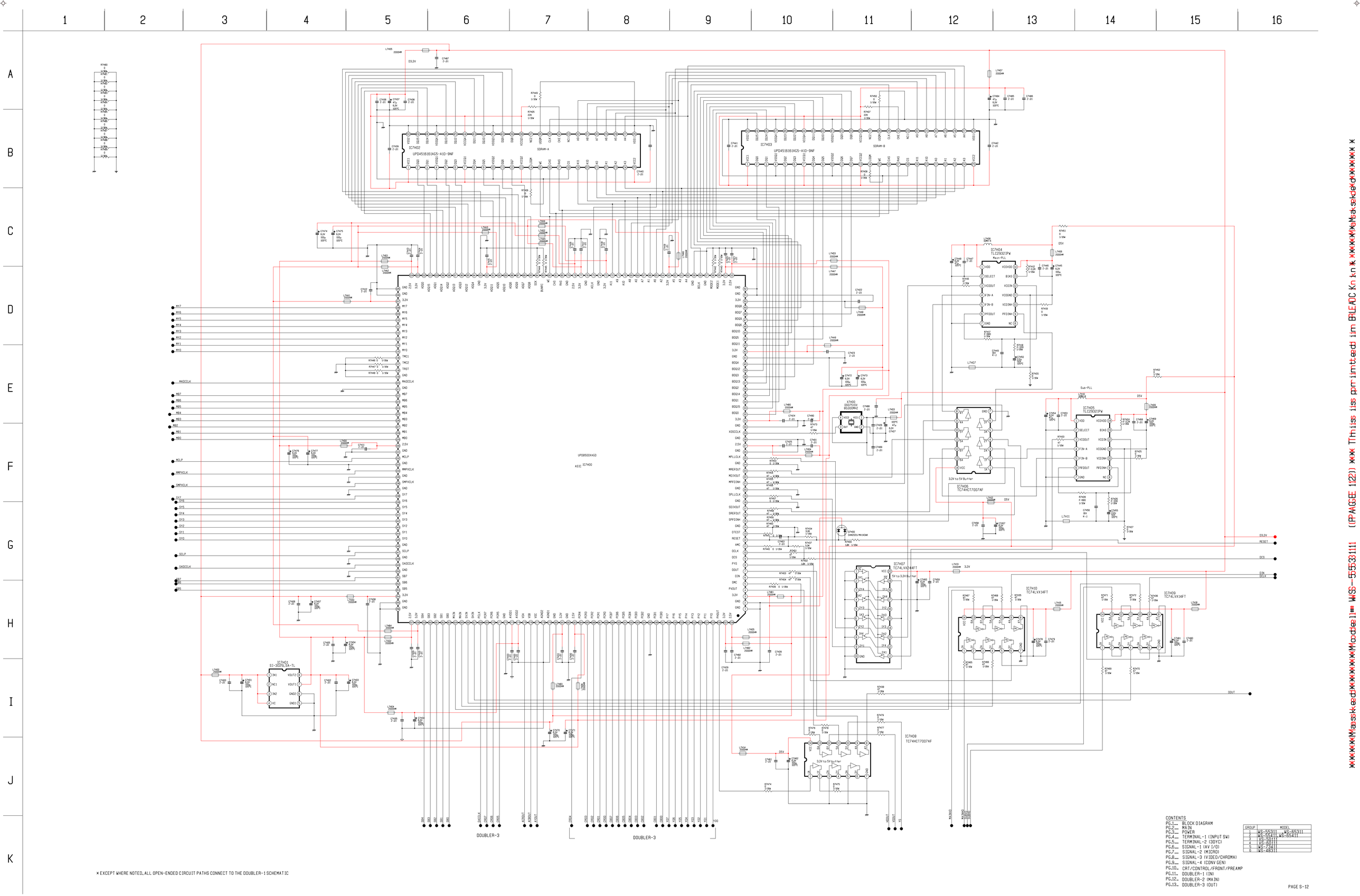

CONTENTS

PG.1.... BLOCK DIAGRAM
PG.2.... MAIN
PG.3.... POWER
PG.4.... TERMINAL-1 (INPUT SW)
PG.5.... TERMINAL-2 (SDYC)
PG.6.... SIGNAL-1 (AV I/O)
PG.7.... SIGNAL-2 (MICRO)
PG.8.... SIGNAL-3 (VIDEO/CHROMA)
PG.9.... SIGNAL-4 (CONV GEN)
PG.10.. CRT/CONTROL/FRONT/PREAMP
PG.11.. DOUBLER-1 (IN)
PG.12.. DOUBLER-2 (MAIN)
PG.13.. DOUBLER-3 (OUT)

GROUP	MODEL
1	WS-55311 WS-65311
2	WS-5511,WS-65411
3	VS-30111
4	VS-60111
5	WS-7241
6	WS-48311

* EXCEPT WHERE NOTED, ALL OPEN-ENDED CIRCUIT PATHS CONNECT TO THE DOUBLER-1 SCHEMATIC

*****Masskedd***********Modelll# WS-55531111 (PAGE 12)) *** This iss pr:imtteadd im BLEADC Kn tn * ****Mbadsedd*****

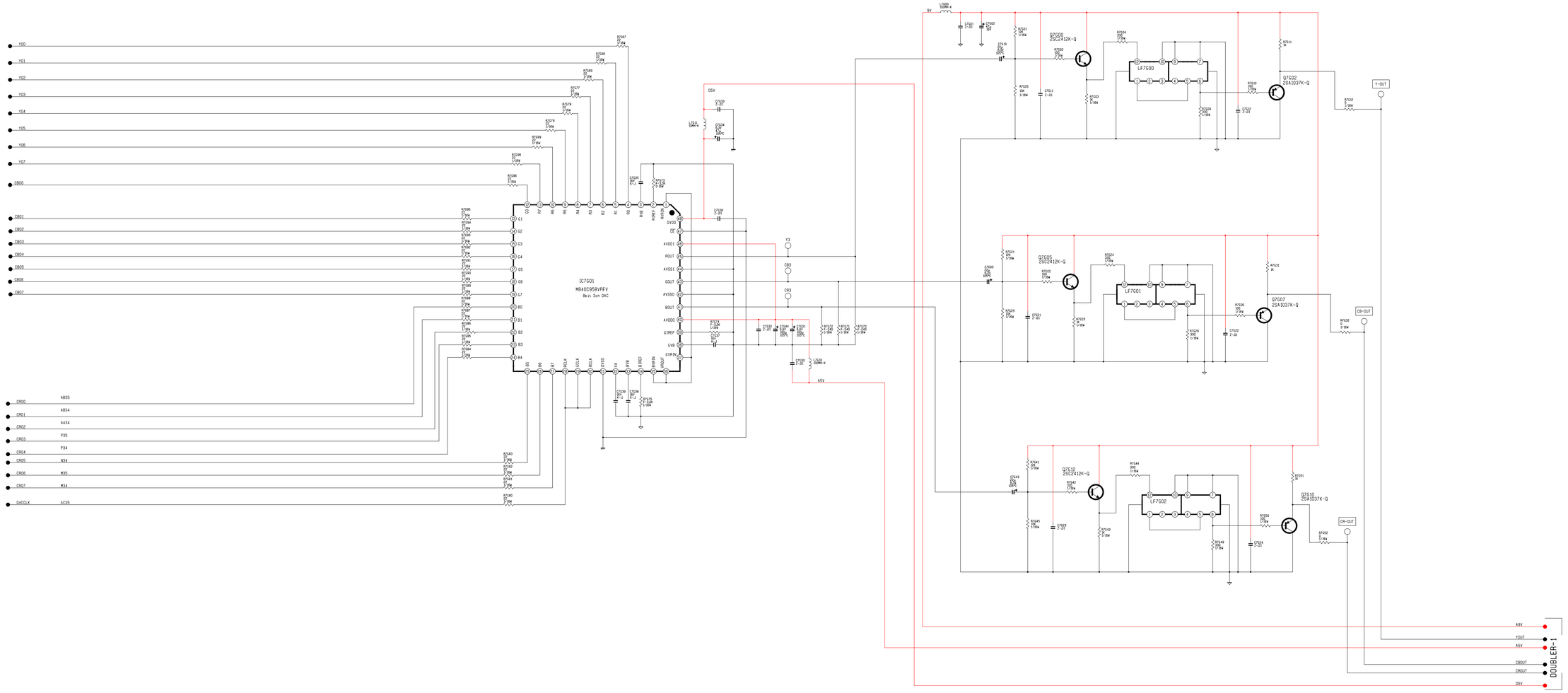

* EXCEPT WHERE NOTED, ALL OPEN-ENDED CIRCUIT PATHS CONNECT TO THE DOUBLER-2 SCHEMATIC

CONTENTS

PG.1.... BLOCK DIAGRAM
PG.2.... MAIN
PG.3.... POWER
PG.4.... TERMINAL-1 (INPUT SW)
PG.5.... TERMINAL-2 (3DYC)
PG.6.... SIGNAL-1 (AV I/O)
PG.7.... SIGNAL-2 (MICRO)
PG.8.... SIGNAL-3 (VIDEO/CHROMA)
PG.9.... SIGNAL-4 (CONV GEN)
PG.10.. CRT/CONTROL/FRONT/PREAMP
PG.11.. DOUBLER-1 (IN)
PG.12.. DOUBLER-2 (MAIN)
PG.13.. DOUBLER-3 (OUT)

GROUP	MODEL
1	WS-55311 WS-65311
2	WS-55411,WS-65411
3	WS-50111
4	WS-60111
5	WS-72411
6	WS-48311

**********Masked**********Model# WS-55311 (P)AGE 133)) *** This iss primitted dim BRLADC Kn tn * ********Masked**********