Pioneer sound.vision.soul

Service Manual

DEH-P840MP/XN/UC

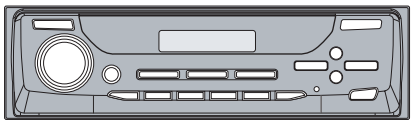

ORDER NO.
CRT2845

MULTI-CD CONTROL HIGH POWER CD/MP3/WMA PLAYER WITH FM/AM TUNER

DEH-P840MP XN/UC
DEH-P8400MP XN/UC
DEH-P8450MP XN/ES

COMPACT disc DIGITAL AUDIO

● This service manual should be used together with the following manual(s):

Model No.	Order No.	Mech. Module	Remarks
CX-3007	CRT2820	S9MP3	CD Mech. Module:Circuit Description, Mech.Description, Disassembly

CONTENTS

1. SAFETY INFORMATION 3
2. EXPLODED VIEWS AND PARTS LIST 4
3. BLOCK DIAGRAM AND SCHEMATIC DIAGRAM ...18
4. PCB CONNECTION DIAGRAM 38
5. ELECTRICAL PARTS LIST 48
6. ADJUSTMENT.....55
7. GENERAL INFORMATION 65
   7.1 DIAGNOSIS 65
      7.1.1 DISASSEMBLY 65
      7.1.2 CONNECTOR FUNCTION DESCRIPTION 74
   7.2 PARTS 75
      7.2.1 IC.....75
      7.2.2 DISPLAY.....92
   7.3 OPERATIONAL FLOW CHART 93
   7.4 CLEANING 93
8. OPERATIONS AND SPECIFICATIONS.....94

For details, refer to "Important symbols for good services".

PIONEER CORPORATION 4-1, Meguro 1-Chome, Meguro-ku, Tokyo 153-8654, Japan
PIONEER ELECTRONICS (USA) INC. P.O.Box 1760, Long Beach, CA 90801-1760 U.S.A.
PIONEER EUROPE NV Haven 1087 Keetberglaan 1, 9120 Melsele, Belgium
PIONEER ELECTRONICS ASIACENTRE PTE.LTD. 253 Alexandra Road, #04-01, Singapore 159936

© PIONEER CORPORATION 2002

K-ZZY. FEB. 2002 Printed in Japan

[Important symbols for good services]
In this manual, the symbols shown-below indicate that adjustments, settings or cleaning should be made securely.
When you find the procedures bearing any of the symbols, be sure to fulfill them:

1. Product safety

You should conform to the regulations governing the product (safety, radio and noise, and other regulations), and should keep the safety during servicing by following the safety instructions described in this manual.

2. Adjustments

To keep the original performances of the product, optimum adjustments or specification confirmation is indispensable. In accordance with the procedures or instructions described in this manual, adjustments should be performed.

3. Cleaning

For optical pickups, tape-deck heads, lenses and mirrors used in projection monitors, and other parts requiring cleaning, proper cleaning should be performed to restore their performances.

4. Shipping mode and shipping screws

To protect the product from damages or failures that may be caused during transit, the shipping mode should be set or the shipping screws should be installed before shipping out in accordance with this manual, if necessary.

5. Lubricants, glues, and replacement parts

Appropriately applying grease or glue can maintain the product performances. But improper lubrication or applying glue may lead to failures or troubles in the product. By following the instructions in this manual, be sure to apply the prescribed grease or glue to proper portions by the appropriate amount.For replacement parts or tools, the prescribed ones should be used.

● CD Player Service Precautions

1. For pickup unit(CXX1550) handling, please refer to"Disassembly"(see page 65)
   During replacement, handling precautions shall be taken to prevent an electrostatic discharge(protection by a jumper-solder).
2. During disassembly, be sure to turn the power off since an internal IC might be destroyed when a connector is plugged or unplugged.
3. Please checking the grating after changing the service pickup unit(see page 59).

1. SAFETY INFORMATION

CAUTION

This service manual is intended for qualified service technicians; it is not meant for the casual do-it-yourselfer.
Qualified technicians have the necessary test equipment and tools, and have been trained to properly and safely repair complex products such as those covered by this manual.
Improperly performed repairs can adversely affect the safety and reliability of the product and may void the warranty.
If you are not qualified to perform the repair of this product properly and safely, you should not risk trying to do so and refer the repair to a qualified service technician.

WARNING

This product contains lead in solder and certain electrical parts contain chemicals which are known to the state of California to cause cancer, birth defects or other reproductive harm.
Health & Safety Code Section 25249.6 - Proposition 65

2. EXPLODED VIEWS AND PARTS LIST

2.1 PACKING (DEH-P840MP)

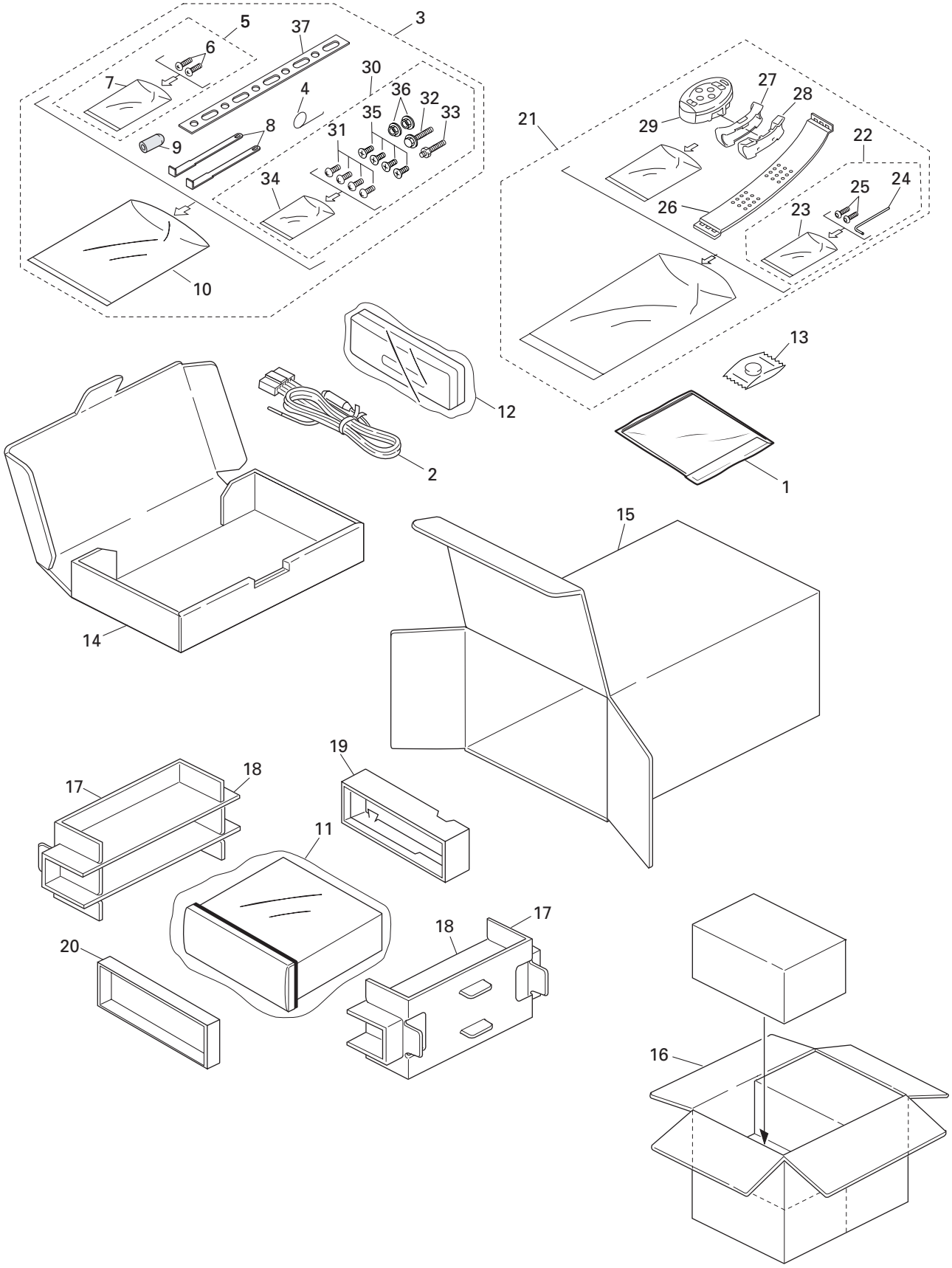

NOTE:

- Parts marked by "*" are generally unavailable because they are not in our Master Spare Parts List.
- Screws adjacent to ∇ mark on the product are used for disassembly.
- For the applying amount of lubricants or glue, follow the instructions in this manual.
  (In the case of no amount instructions, apply as you think it appropriate.)

● PACKING SECTION PARTS LIST (DEH-P840MP)

Mark	No.	Description	Part No.
	1-1	Owner's Manual	CRD3569
	1-2	Installation Manual	CRD3570
*	1-3	Caution Card	CRP1268
*	1-4	Warranty Card	CRY1070
	1-5	Polyethylene Bag	CEG1116
	2	Cord Assy	CDE6563
	3	Accessory Assy	CEA3142
	4	Spring	CBH1650
	5	Screw Assy	CEA3140
	6	Screw	BPZ20P060FMC
*	7	Polyethylene Bag	CEG-127
	8	Handle	CNC5395
	9	Bush	CNV3930
*	10	Polyethylene Bag	CEG-158
	11	Polyethylene Bag	CEG1185
	12	Case Assy	CXB8574
*	13	Battery	CEX1030
	14	Sub Carton	CHA3258
	15	Carton	CHG4661
	16	Contain Box	CHL4661
	17	Protector	CHP2538
	18	Protector	CHP2539
	19	Protector	CHP2541
	20	Protector	CHP2546
	21	Remote Control Assy	CXB9202
	22	Screw Assy	CZE3169
*	23	Polyethylene Bag	CEG-127
*	24	Hexagonal Wrench	CZE3176
*	25	Screw	RMZ30H060FBK
	26	Belt	CZN7661
	27	Holder Assy	CZX3172
	28	Holder Assy	CZX3173
	29	Remote Control Assy	CZX3257
	30	Screw Assy	CEA3144
	31	Screw	BMZ50P060FMC
	32	Screw	CBA-102
	33	Screw	CBA1002
*	34	Polyethylene Bag	CEG-127
	35	Screw	CMZ50P060FMC
	36	Nut	NF50FMC
	37	Strap	CNC5402

● Owner's Manual, Installation Manual

Part No.	Language
CRD3569	English, French
CRD3570	English, French

2.2 PACKING (DEH-P8400MP)

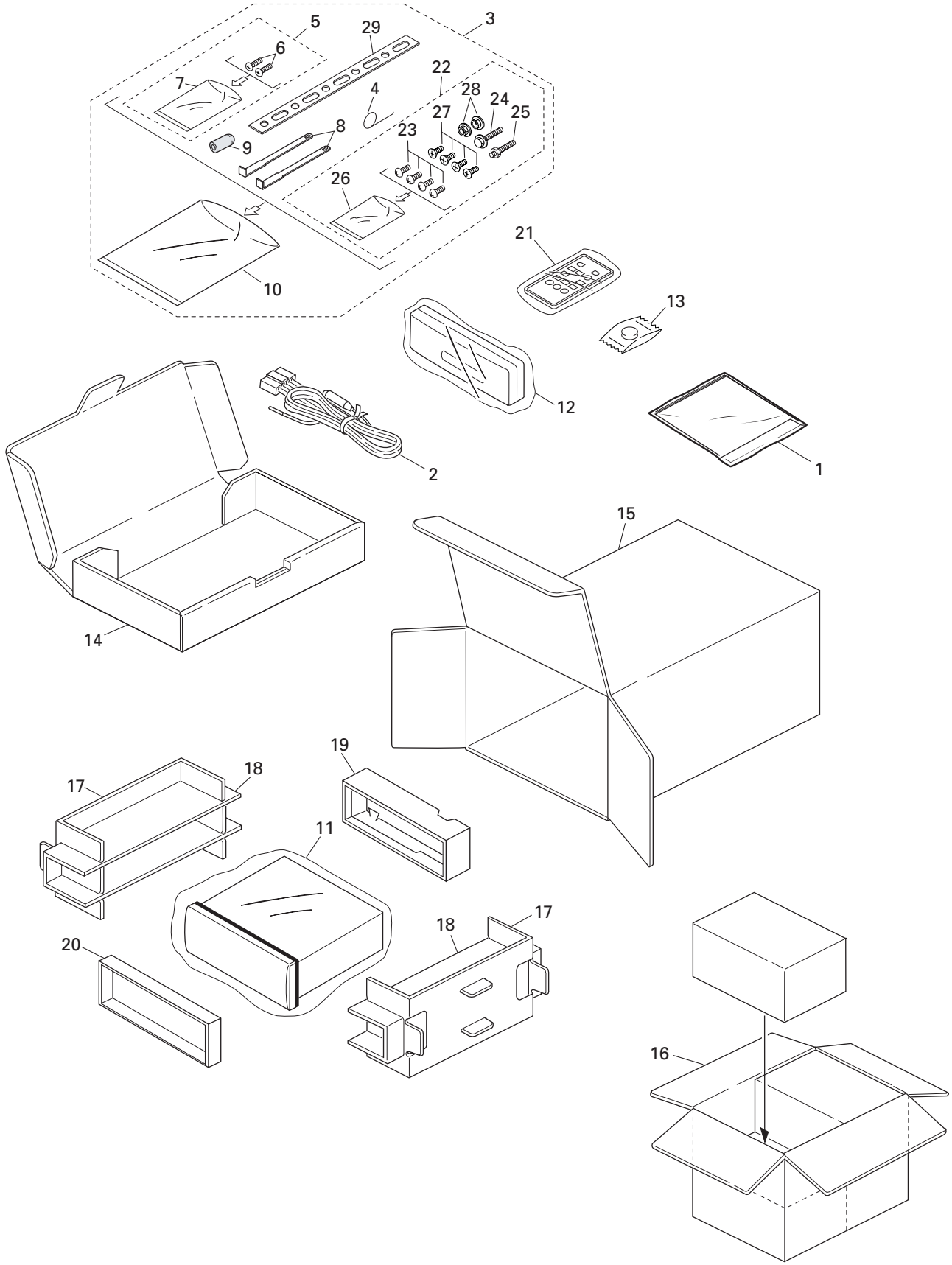

● PACKING SECTION PARTS LIST (DEH-P8400MP)

Mark	No.	Description	Part No.
	1-1	Owner's Manual	CRD3571
	1-2	Installation Manual	CRD3572
*	1-3	Caution Card	CRP1268
*	1-4	Card	ARY1048
	1-5	Polyethylene Bag	CEG1116
	2	Cord Assy	CDE6563
	3	Accessory Assy	CEA3142
	4	Spring	CBH1650
	5	Screw Assy	CEA3140
	6	Screw	BPZ20P060FMC
*	7	Polyethylene Bag	CEG-127
	8	Handle	CNC5395
	9	Bush	CNV3930
*	10	Polyethylene Bag	CEG-158
	11	Polyethylene Bag	CEG1185
	12	Case Assy	CXB8574
*	13	Battery	CEX1065
	14	Sub Carton	CHA3258
	15	Carton	CHG4662
	16	Contain Box	CHL4662
	17	Protector	CHP2538
	18	Protector	CHP2539
	19	Protector	CHP2541
	20	Protector	CHP2546
	21	Remote Control Unit	CXB8743
	22	Screw Assy	CEA3144
	23	Screw	BMZ50P060FMC
	24	Screw	CBA-102
	25	Screw	CBA1002
*	26	Polyethylene Bag	CEG-127
	27	Screw	CMZ50P060FMC
	28	Nut	NF50FMC
	29	Strap	CNC5402

● Owner's Manual, Installation Manual

Part No.	Language
CRD3571	English, French
CRD3572	English, French

2.3 PACKING (DEH-P8450MP)

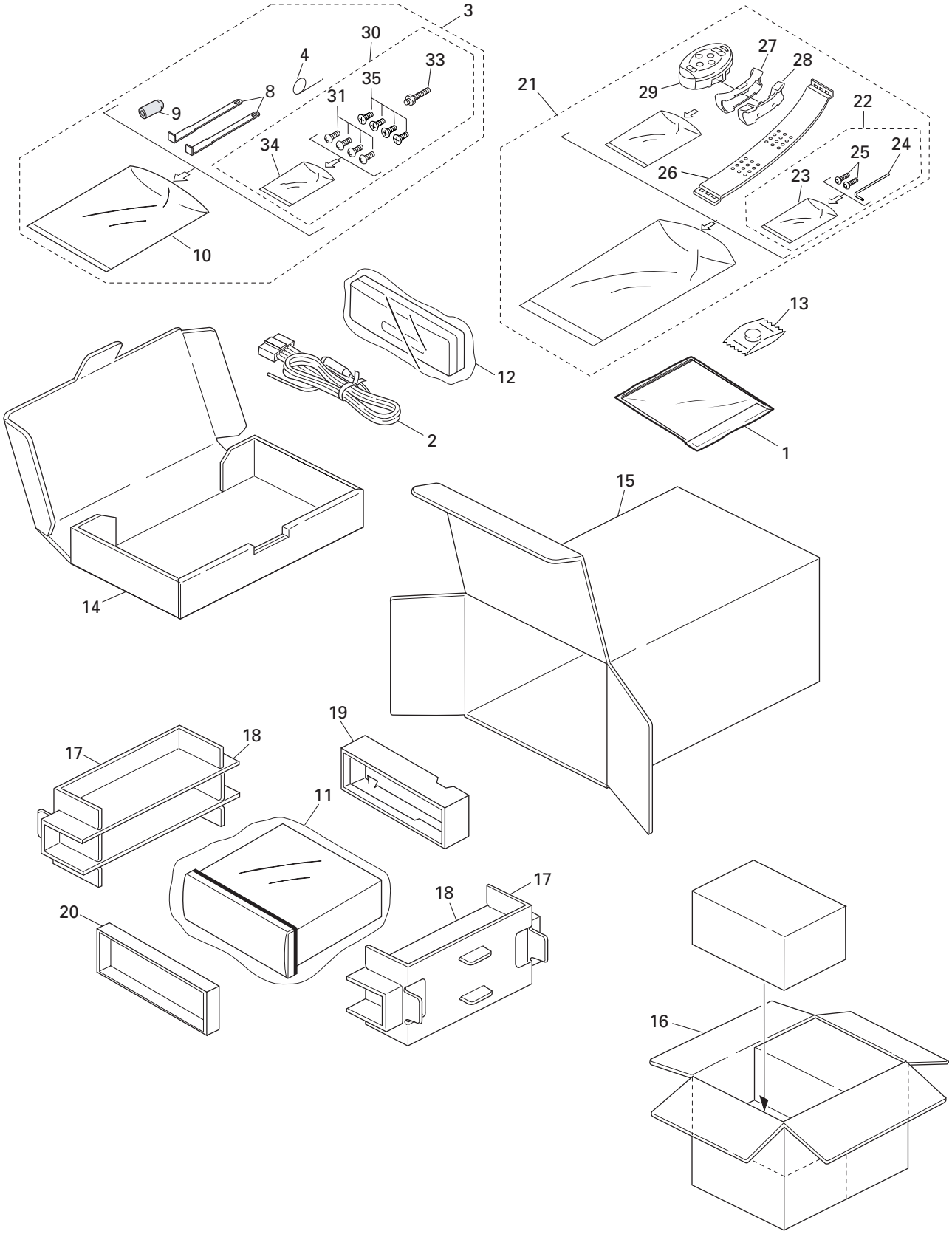

● PACKING SECTION PARTS LIST (DEH-P8450MP)

Mark	No.	Description	Part No.
	1-1	Owner's Manual	CRD3573
	1-2	Owner's Manual	CRD3574
	1-3	Installation Manual	CRD3575
*	1-4	Caution Card	CRP1268
	1-5	Polyethylene Bag	CEG1116
	2	Cord Assy	CDE6563
	3	Accessory Assy	CEA3143
	4	Spring	CBH1650
	5-7	•••••	
	8	Handle	CNC5395
	9	Bush	CNV3930
*	10	Polyethylene Bag	CEG-158
	11	Polyethylene Bag	CEG1088
	12	Case Assy	CXB8574
*	13	Battery	CEX1030
	14	Sub Carton	CHA3258
	15	Carton	CHG4663
	16	Contain Box	CHL4663
	17	Protector	CHP2538
	18	Protector	CHP2539
	19	Protector	CHP2541
	20	Protector	CHP2546
	21	Remote Control Assy	CXB9202
	22	Screw Assy	CZE3169
*	23	Polyethylene Bag	CEG-127
*	24	Hexagonal Wrench	CZE3176
*	25	Screw	RMZ30H060FBK
	26	Belt	CZN7661
	27	Holder Assy	CZX3172
	28	Holder Assy	CZX3173
	29	Remote Control Assy	CZX3257
	30	Screw Assy	CEA2941
	31	Screw	BMZ50P060FMC
	32	•••••	
	33	Screw	CBA1002
*	34	Polyethylene Bag	CEG-127
	35	Screw	CMZ50P060FMC

● Owner's Manual, Installation Manual

Part No.	Language
CRD3573	English, Spanish
CRD3574	Portuguese(B), Arabic
CRD3575	English, Spanish, Portuguese(B), Arabic

2.4 EXTERIOR(1)

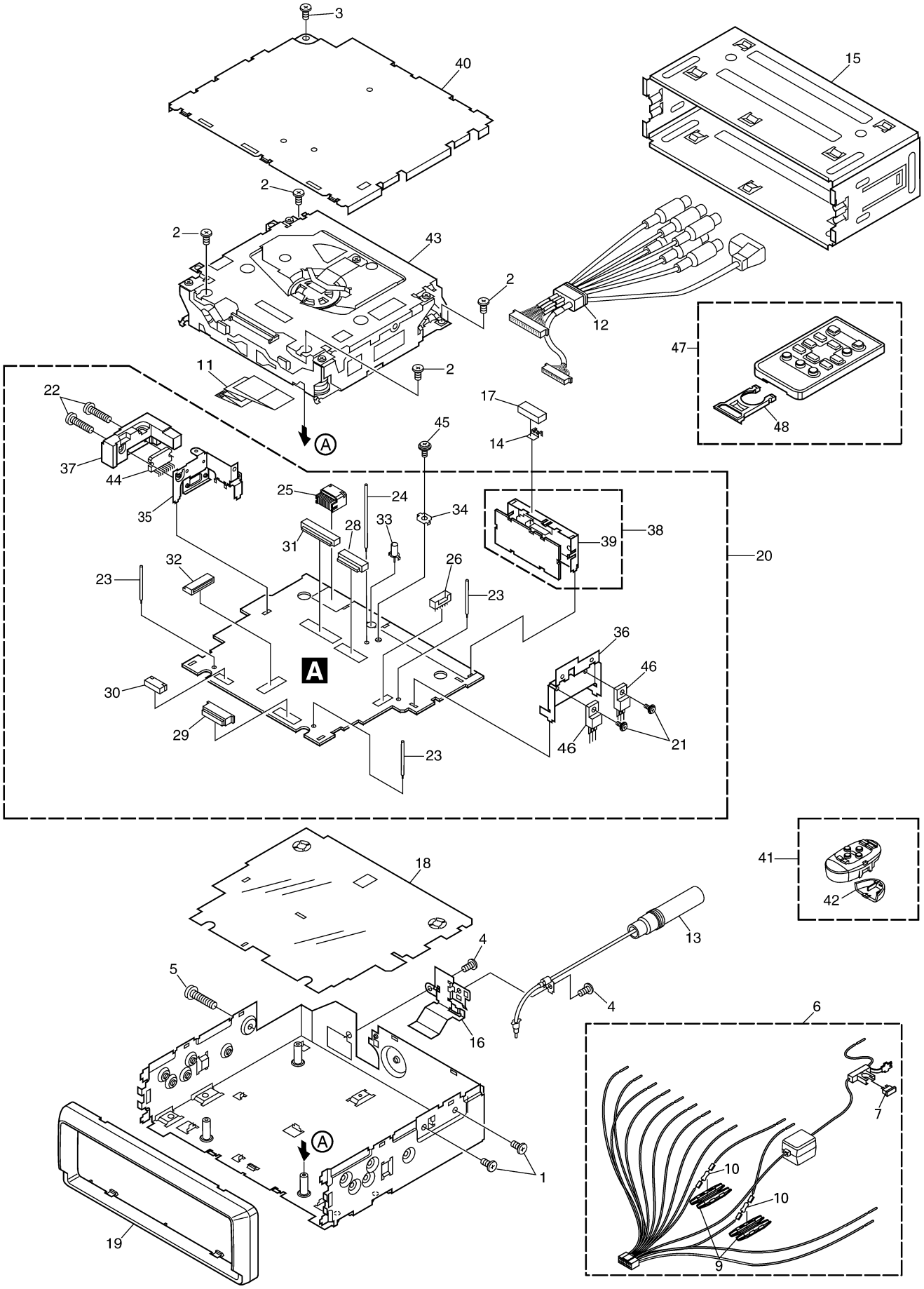

(1) EXTERIOR(1) SECTION PARTS LIST

Mark	No.	Description	Part No.
	1	Screw	BMZ26P040FMC
	2	Screw	BSZ26P060FMC
	3	Screw	BSZ30P050FZK
	4	Screw	BSZ30P080FMC
	5	Screw	BSZ30P160FMC
	6	Cord Assy	CDE6563
	7	Fuse(10A)	CEK1136
	8	•••••	
	9	Cap	CNS1472
	10	Resistor	RS1/2PMF102J
	11	Flat Cable	CDE7021
	12	Cord Assy	CDE7026
	13	Antenna Cable	CDH1266
	14	Holder	CNC6469
	15	Holder	CNC8659
	16	Holder	CNC9708
	17	Cushion	CNM4870
	18	Insulator	CNM7543
	19	Panel	CNS6863
	20	Tuner Amp Unit	See Contrast table(2)
	21	Screw	ASZ26P080FMC
	22	Screw	BMZ26P140FMC
	23	Clamper	CEF1008
	24	Clamper	CEF1009
	25	Plug(CN981)	CKM1278
	26	Plug(CN811)	CKS-787
	27	•••••	
*	28	Plug(CN101)	CKS1058
	29	Connector(CN832)	CKS1082
*	30	Connector(CN831)	CKS2211
	31	Connector(CN351)	CKS3606
	32	Connector(CN723)	CKS3835
	33	Pin Jack(CN402)	CKX1046
	34	Holder	CNC5399
	35	Holder	CNC9711
	36	Holder	CNC9713
	37	Heat Sink	CNR1615
	38	FM/AM Tuner Unit	CWE1563
	39	Holder	CNC8815
	40	Case Unit	CXB8524
	41	Remote Control Assy	See Contrast table(2)
	42	Cover	See Contrast table(2)
	43	CD Mechanism Module(S9MP3)	CXK5556
	44	IC(IC301)	PAL007A
	45	Screw	ISS26P055FUC
	46	Transistor(Q752,921)	2SD2396
	47	Remote Control Unit	See Contrast table(2)
	48	Cover	See Contrast table(2)

(2) CONTRAST TABLE

DEH-P840MP/XN/UC, DEH-P8400MP/XN/UC and DEH-P8450MP/XN/ES are constructed the same except for the following:

Mark No.	Symbol and Description	Part No.		
		DEH-P840MP/XN/UC	DEH-P8400MP/XN/UC	DEH-P8450MP/XN/ES
20	Tuner Amp Unit	CWM8042	CWM8043	CWM8044
41	Remote Control Assy	CZX3257	Not used	CZX3257
42	Cover	CZN7655	Not used	CZN7655
47	Remote Control Unit	Not used	CXB8743	Not used
48	Cover	Not used	CNS7068	Not used

2.5 EXTERIOR(2)

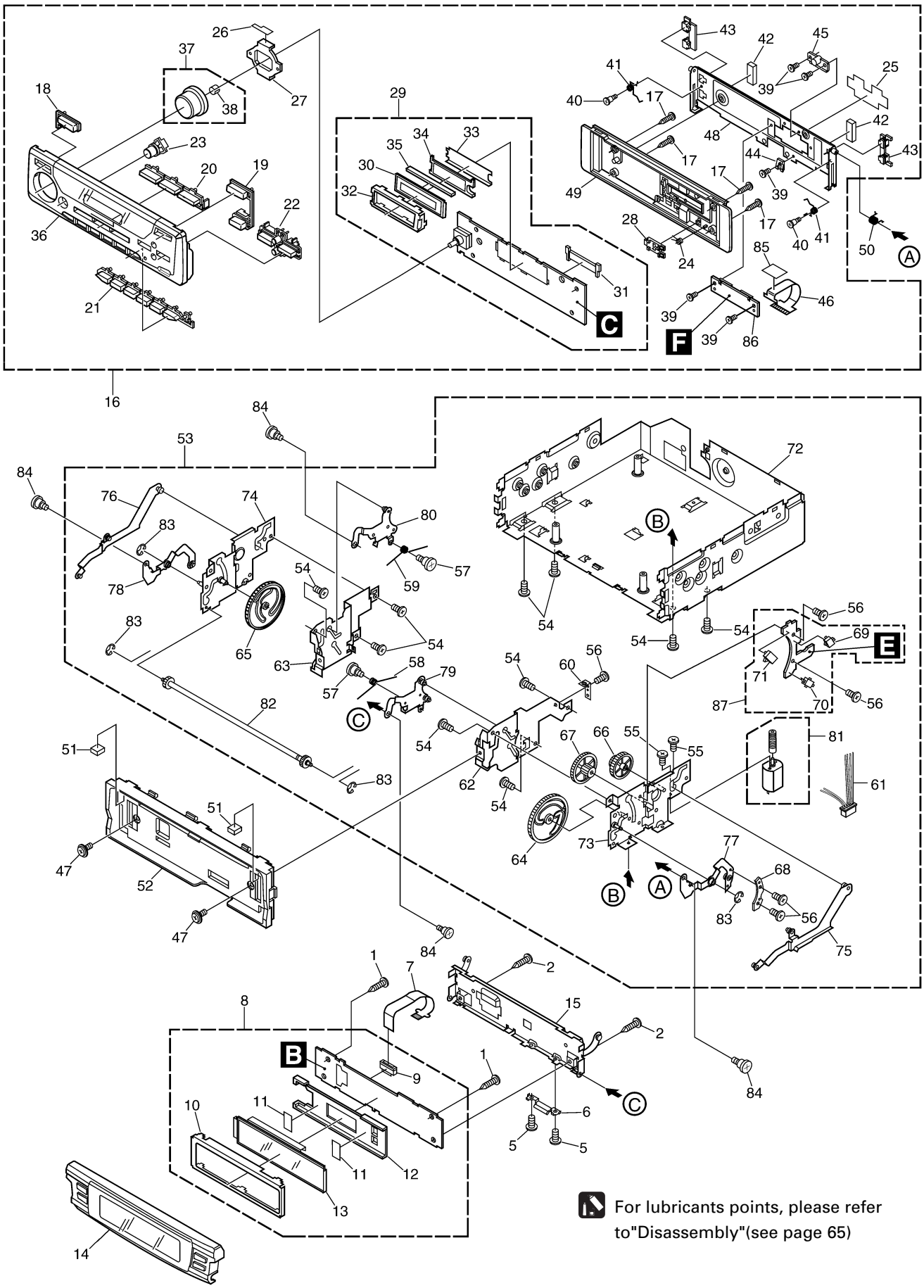

For lubricants points, please refer to"Disassembly"(see page 65)

(1) EXTERIOR(2) SECTION PARTS LIST

Mark	No.	Description	Part No.
	1	Screw	BPZ20P060FMC
	2	Screw	BPZ20P080FZK
	3,4	•••••	
	5	Screw(M2x2)	CBA1250
	6	Holder	CNC9800
	7	Flexible PCB	CNP6498
	8	Keyboard Unit(OEL)	See Contrast table(2)
	9	Connector(CN1801)	CKS4175
	10	Holder	CNC9649
	11	Tape	CNM7514
	12	Holder	CNV6916
	13	OEL Unit	MXS8018
	14	Sub Grille Assy	See Contrast table(2)
	15	Case Unit	CXB7967
	16	Detach Grille Assy	See Contrast table(2)
	17	Screw	BPZ20P080FZK
	18	Button(EJECT)	CAC7241
	19	Button(OPEN/BAND)	CAC7242
	20	Button(SRC/PAUSE/CLK)	CAC7244
	21	Button(1-6)	CAC7246
	22	Button(CROSS)	CAC7247
	23	Button(EQ)	CAC7248
	24	Spring	CBH2543
	25	Insulator	CNM7649
	26	Sheet	CNM7824
	27	Lighting Conductor	CNV6913
	28	Arm	CNV6963
	29	Keyboard Unit(LCD)	CWM8056
	30	LCD(LCD1901)	CAW1704
	31	Connector(CN1901)	CKS4549
	32	Holder	CNC9648
	33	Sheet	CNM7512
	34	Lighting Conductor	CNV6914
	35	Connector	CNV6915
	36	Grille Unit	See Contrast table(2)
	37	Knob Assy	CXB8026
	38	Spring	CBL1321
	39	Screw(M2x2)	CBA1250
	40	Screw	CBA1561
	41	Spring	CBH2530
	42	Cushion	CNM7551
	43	Arm	CNV6962
	44	Guide	CNV6967
	45	Guide	CNV6968
	46	Flexible PCB	CNP6869
	47	Screw	ISS26P055FUC
	48	Case Unit	CXB7968
	49	Cover Unit	CXB8127
	50	Spring	CBH2545
	51	Cushion	CNM7550
	52	Panel Unit	CXB7953
	53	Drive Unit	CXB8138
	54	Screw	BMZ26P040FMC
	55	Screw(M2x3)	CBA1061
	56	Screw(M2x2)	CBA1250
	57	Screw(M2x1.4)	CBA1562
	58	Spring	CBH2525
	59	Spring	CBH2526
	60	Spring	CBL1557
	61	Cord	CDE6737
	62	Holder	CNC9678
	63	Holder	CNC9679
	64	Gear	CNV6932
	65	Gear	CNV6933
	66	Gear	CNV6935
	67	Gear	CNV6936
	68	Lever	CNV6937
	69	Switch(S951)	CSN1051
	70	Spring Switch(S952)	CSN1052
	71	Switch(S953)	CSN1058
	72	Chassis Unit	CXB7956
	73	Holder Unit	CXB7959
	74	Holder Unit	CXB7960
	75	Arm Unit	CXB7961
	76	Arm Unit	CXB7962
	77	Arm Unit	CXB7963
	78	Arm Unit	CXB7964
	79	Arm Unit	CXB7965
	80	Arm Unit	CXB7966
	81	Motor Unit(M951)	CXB8939
	82	Gear Unit	CXB8940
	83	Washer	YE15FUC
	84	Screw	CBA1559
	85	Sheet	CNM7839
	86	PCB	CNX3607
	87	Switch Unit	CWS1370

(2) CONTRAST TABLE

DEH-P840MP/XN/UC, DEH-P8400MP/XN/UC and DEH-P8450MP/XN/ES are constructed the same except for the following:

Mark No.	Symbol and Description	Part No.		
		DEH-P840MP/XN/UC	DEH-P8400MP/XN/UC	DEH-P8450MP/XN/ES
8	Keyboard Unit(OEL)	CWM8051	CWM8052	CWM8052
14	Sub Grille Assy	CXB9363	CXB9362	CXB9364
16	Detach Grille Assy	CXB8092	CXB8093	CXB8094
36	Grille Unit	CXB7942	CXB7941	CXB7943

2.6 CD MECHANISM MODULE

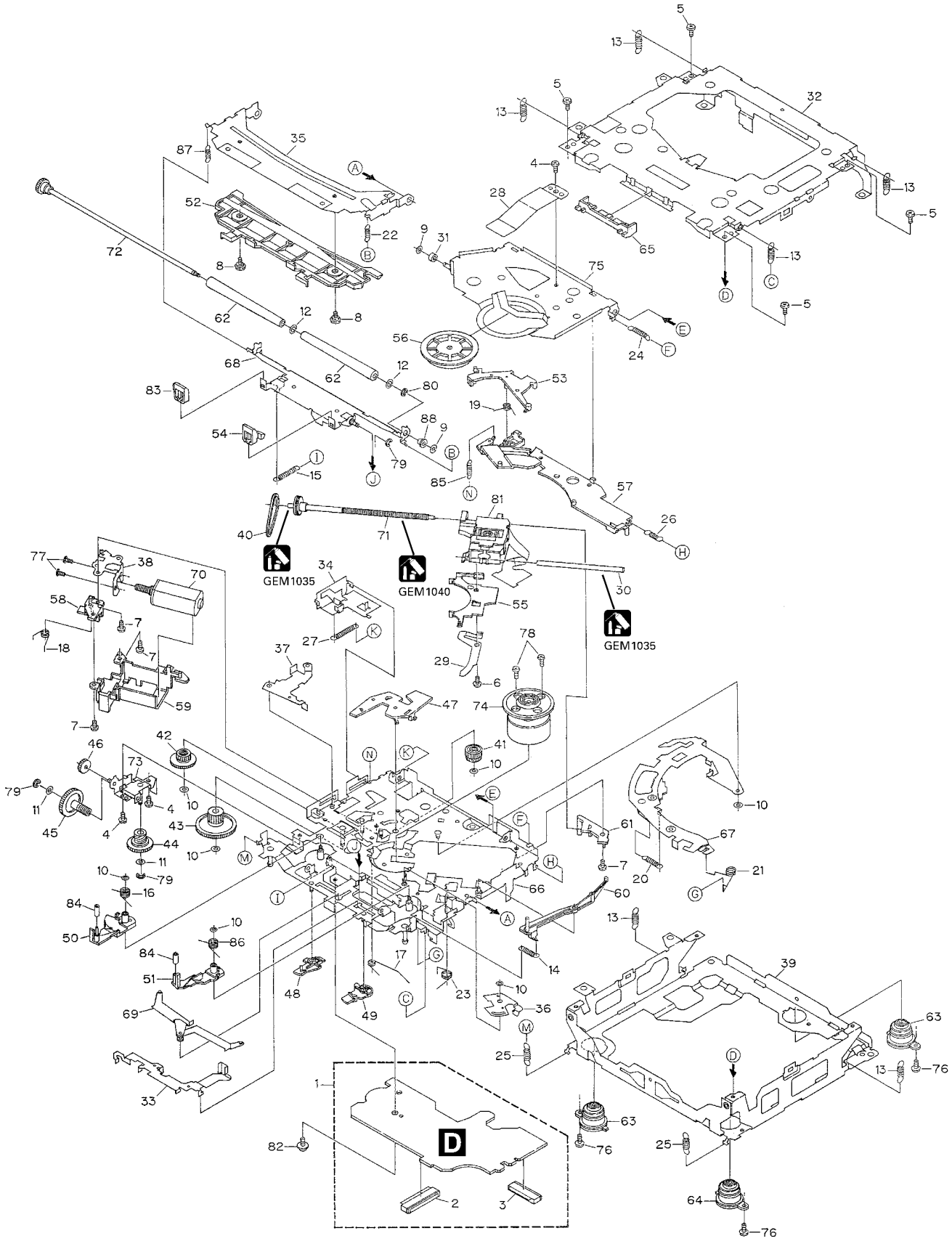

● CD MECHANISM MODULE SECTION PARTS LIST

Mark	No.	Description	Part No.
	1	CD Core Unit(S9MP3)	CWX2618
	2	Connector(CN901)	CKS4188
	3	Connector(CN101)	CKS3486
	4	Screw	BMZ20P025FMC
	5	Screw	BSZ20P040FMC
	6	Screw(M2x4)	CBA1362
	7	Screw(M2x3)	CBA1527
	8	Screw	CBA1545
	9	Washer	CBF1037
	10	Washer	CBF1038
	11	Washer	CBF1039
	12	Washer	CBF1060
	13	Spring	CBH2378
	14	Spring	CBH2379
	15	Spring	CBH2514
	16	Spring	CBH2533
	17	Spring	CBH2382
	18	Spring	CBH2383
	19	Spring	CBH2384
	20	Spring	CBH2527
	21	Spring	CBH2386
	22	Spring	CBH2537
	23	Spring	CBH2390
	24	Spring	CBH2391
	25	Spring	CBH2523
	26	Spring	CBH2426
	27	Spring	CBH2444
	28	Spring	CBL1561
	29	Spring	CBL1553
	30	Shaft	CLA3845
	31	Roller	CLA3910
	32	Frame	CNC9654
	33	Lever	CNC9664
	34	Lever	CNC8949
	35	Arm	CNC9661
	36	Arm	CNC9016
	37	Arm	CNC9017
	38	Bracket	CNC9123
	39	Frame	CNC9656
	40	Belt	CNT1086
	41	Gear	CNV6886
	42	Gear	CNV6316
	43	Gear	CNV6317
	44	Gear	CNV6318
	45	Gear	CNV6319
	46	Gear	CNV6320
	47	Arm	CNV6322
	48	Arm	CNV6323
	49	Arm	CNV6324
	50	Arm	CNV6888
	51	Arm	CNV6889
	52	Guide	CNV6327
	53	Arm	CNV6924
	54	Guide	CNV6921
	55	Rack	CNV6923
	56	Clamper	CNV6331
	57	Arm	CNV6332
	58	Guide	CNV6333
	59	Cover	CNV6334
	60	Arm	CNV6335
	61	Guide	CNV6336
	62	Roller	CNV6338
	63	Damper	CNV6175
	64	Damper	CNV6662
	65	Guide	CNV6925
	66	Chassis Unit	CXB7980
*	67	Arm Unit	CXB7983
	68	Arm Unit	CXB7984
	69	Arm Unit	CXB7985
	70	Motor Unit(M2)	CXB5903
	71	Screw Unit	CXB5904
	72	Gear Unit	CXB8076
	73	Bracket Unit	CXB7982
	74	Motor Unit(M1)	CXB6007
	75	Arm Unit	CXB8504
	76	Screw(M2x5)	EBA1028
	77	Screw	JFZ20P020FMC
	78	Screw	JGZ17P020FZK
	79	Washer	YE15FUC
	80	Washer	YE20FUC
	81	Pickup Unit(Service)(P9MP3)	CXX1550
	82	Screw	IMS26P030FMC
	83	Guide	CNV6922
	84	Roller	CNV6887
	85	Spring	CBH2509
	86	Spring	CBH2512
	87	Spring	CBH2536
	88	Collar	CNV6906

3. BLOCK DIAGRAM AND SCHEMATIC DIAGRAM

3.1 BLOCK DIAGRAM

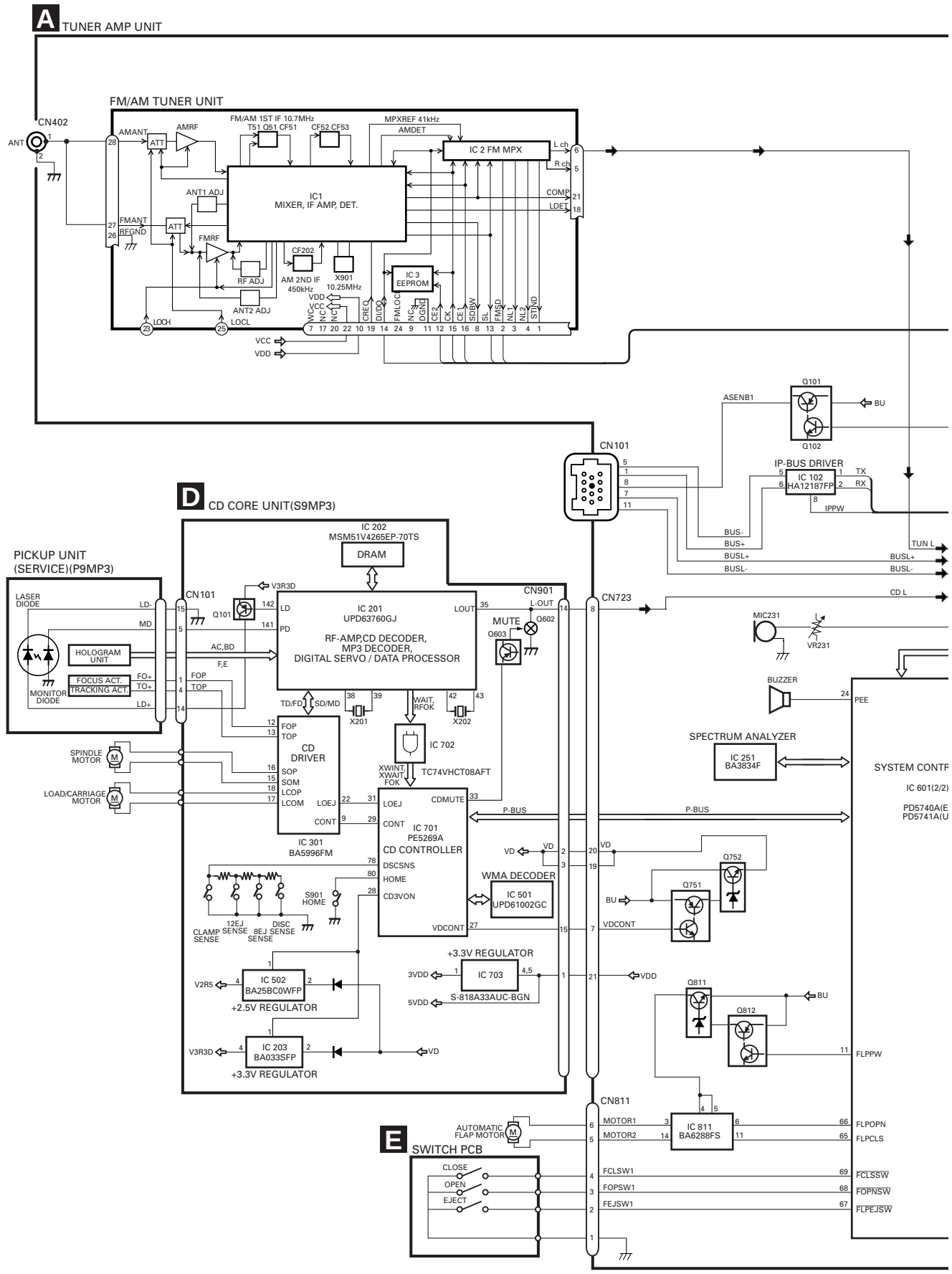

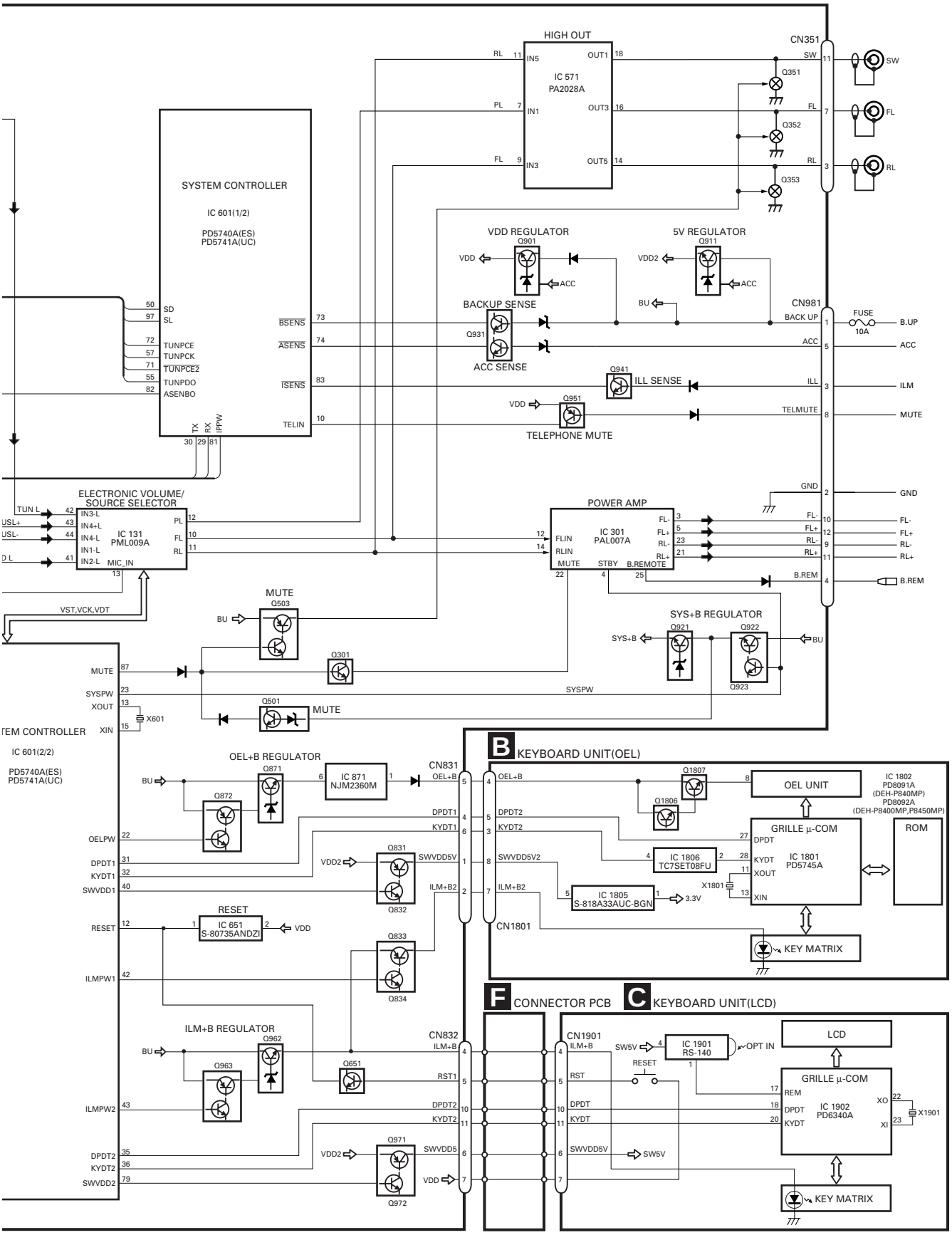
HIGH OUT
IC 571
PA2028A
IN5
IN1
IN3
OUT1
OUT3
OUT5
RL
PL
FL
CN351
SW
FL
RL
Q351
Q352
Q353
SYSTEM CONTROLLER
IC 601(1/2)
PD5740A(ES)
PD5741A(UC)
SD
SL
TUNPCE
TUNPCK
TUNPCE2
TUNPDO
ASENBO
BSENS
ASENS
ISENS
TELIN
TX
RX
IPPW
VDD REGULATOR
Q901
VDD
ACC
5V REGULATOR
Q911
VDD2
BU
BACKUP SENSE
Q931
ACC SENSE
Q941
ILL SENSE
Q951
TELEPHONE MUTE
CN981
BACK UP
FUSE
10A
B.UP
ACC
ILL
TELMUTE
MUTE
GND
FL-
FL+
RL-
RL+
B.REM
ELECTRONIC VOLUME/
SOURCE SELECTOR
IC 131
PML009A
IN3-L
IN4+L
IN4-L
IN1-L
IN2-L
MIC_IN
TUN L
USL+
USL-
D L
VST,VCK,VDT
POWER AMP
IC 301
PAL007A
FLIN
RLIN
MUTE
STBY
B.REMOTE
MUTE
Q503
BU
Q301
SYS+B REGULATOR
Q921
Q922
Q923
SYS+B
SYSPW
Q501
MUTE
X601
XOUT
XIN
TEM CONTROLLER
IC 601(2/2)
PD5740A(ES)
PD5741A(UC)
OELPW
DPDT1
KYDT1
SWVDD1
RESET
ILMPW1
ILMPW2
DPDT2
KYDT2
SWVDD2
OEL+B REGULATOR
Q871
Q872
IC 871
NJM2360M
CN831
OEL+B
DPDT1
KYDT1
SWVDD5V
ILM+B2
Q831
Q832
VDD2
RESET
IC 651
S-80735ANDZI
VDD
Q833
Q834
ILM+B REGULATOR
Q962
Q963
Q651
CN832
ILM+B
RST1
DPDT2
KYDT2
SWVDD5
VDD
Q971
Q972
B KEYBOARD UNIT(OEL)
OEL+B
DPDT2
KYDT2
SWVDD5V2
ILM+B2
Q1807
Q1806
OEL UNIT
IC 1802
PD8091A
(DEH-P840MP)
PD8092A
(DEH-P8400MP,P8450MP)
GRILLE μ-COM
IC 1801
PD5745A
DPDT
KYDT
XOUT
XIN
ROM
IC 1806
TC7SET08FU
X1801
IC 1805
S-818A33AUC-BGN
3.3V
CN1801
KEY MATRIX
F CONNECTOR PCB
C KEYBOARD UNIT(LCD)
CN1901
ILM+B
RST
DPDT
KYDT
SWVDD5V
SW5V
IC 1901
RS-140
OPT IN
RESET
LCD
GRILLE μ-COM
IC 1902
PD6340A
REM
DPDT
KYDT
XO
XI
X1901
KEY MATRIX

3.2 OVERALL CONNECTION DIAGRAM(GUIDE PAGE)

Note: When ordering service parts, be sure to refer to " EXPLODED VIEWS AND PARTS LIST" or "ELECTRICAL PARTS LIST".

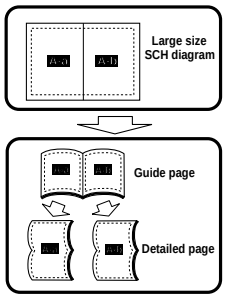

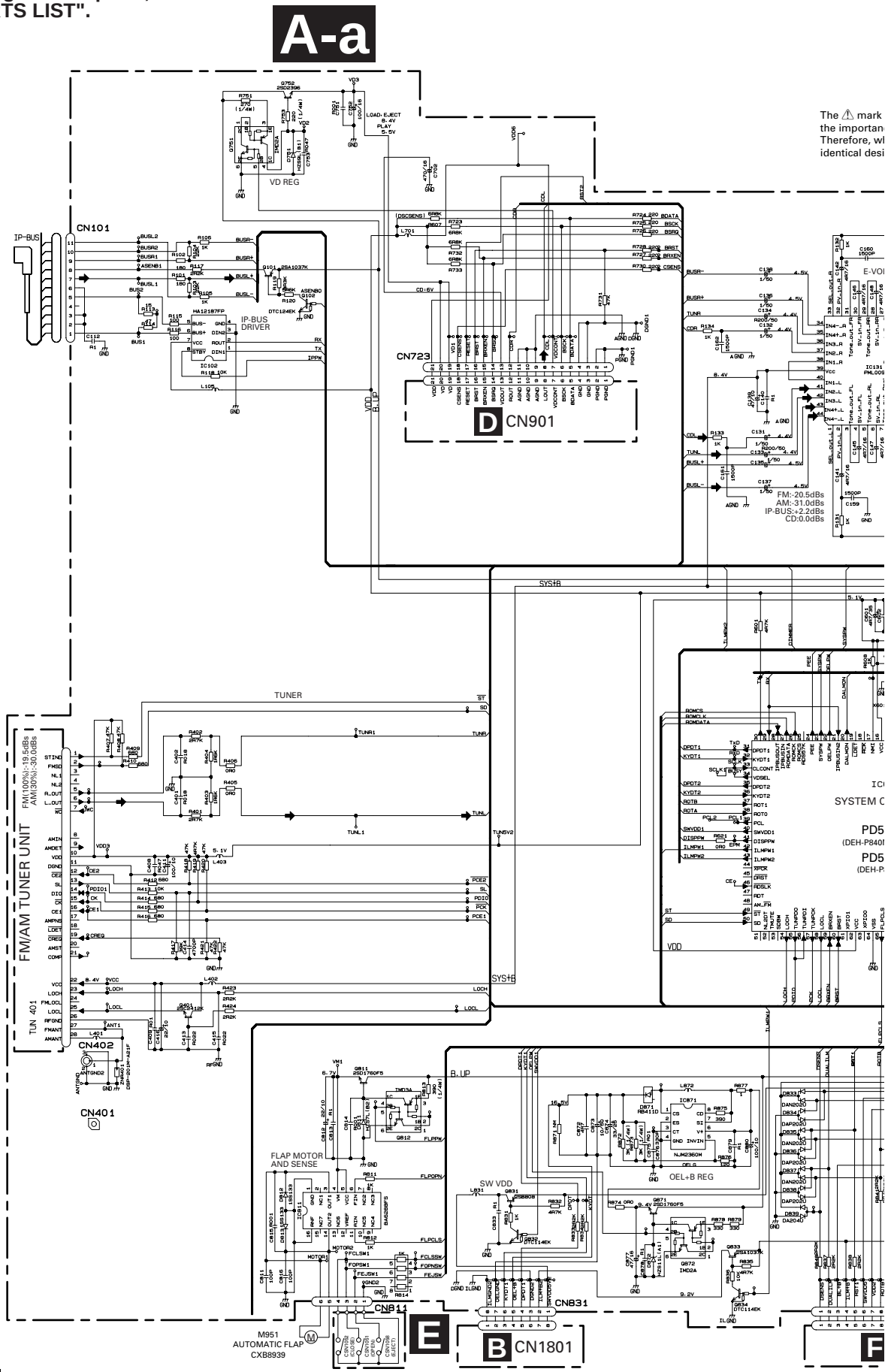

A-b

found on some component parts indicates
ce of the safety factor of the part.
hen replacing, be sure to use parts of
gnation.

A TUNER AMP UNIT

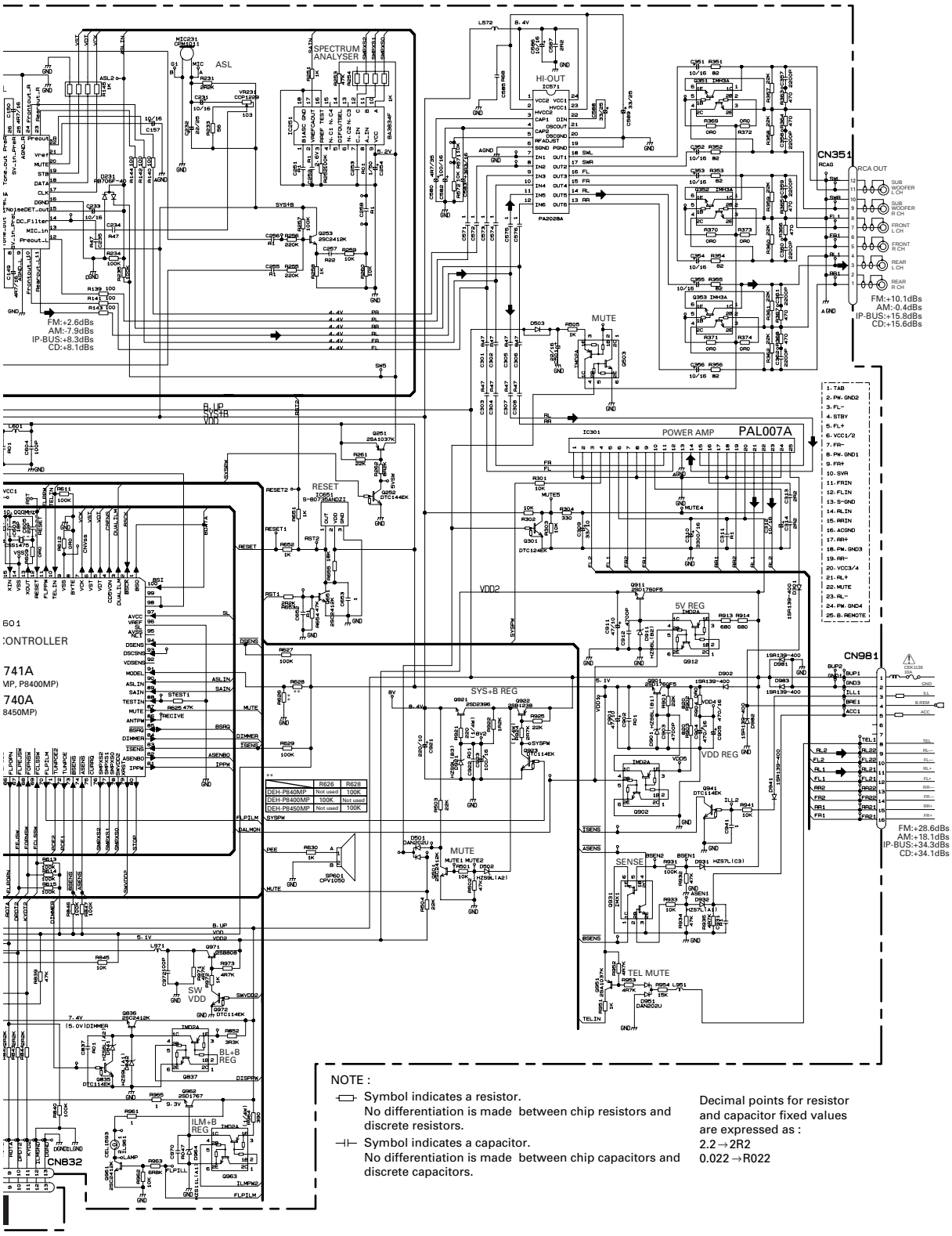

	R626	R628
DEH-P840MP	Not used	100K
DEH-P8400MP	100K	Not used
DEH-P8450MP	Not used	100K

NOTE :

Symbol indicates a resistor.
No differentiation is made between chip resistors and discrete resistors.

Symbol indicates a capacitor.
No differentiation is made between chip capacitors and discrete capacitors.

Decimal points for resistor and capacitor fixed values are expressed as :
2.2→2R2
0.022→R022

A-a A-b

The ⚠ mar
the importa
Therefore, \
identical de

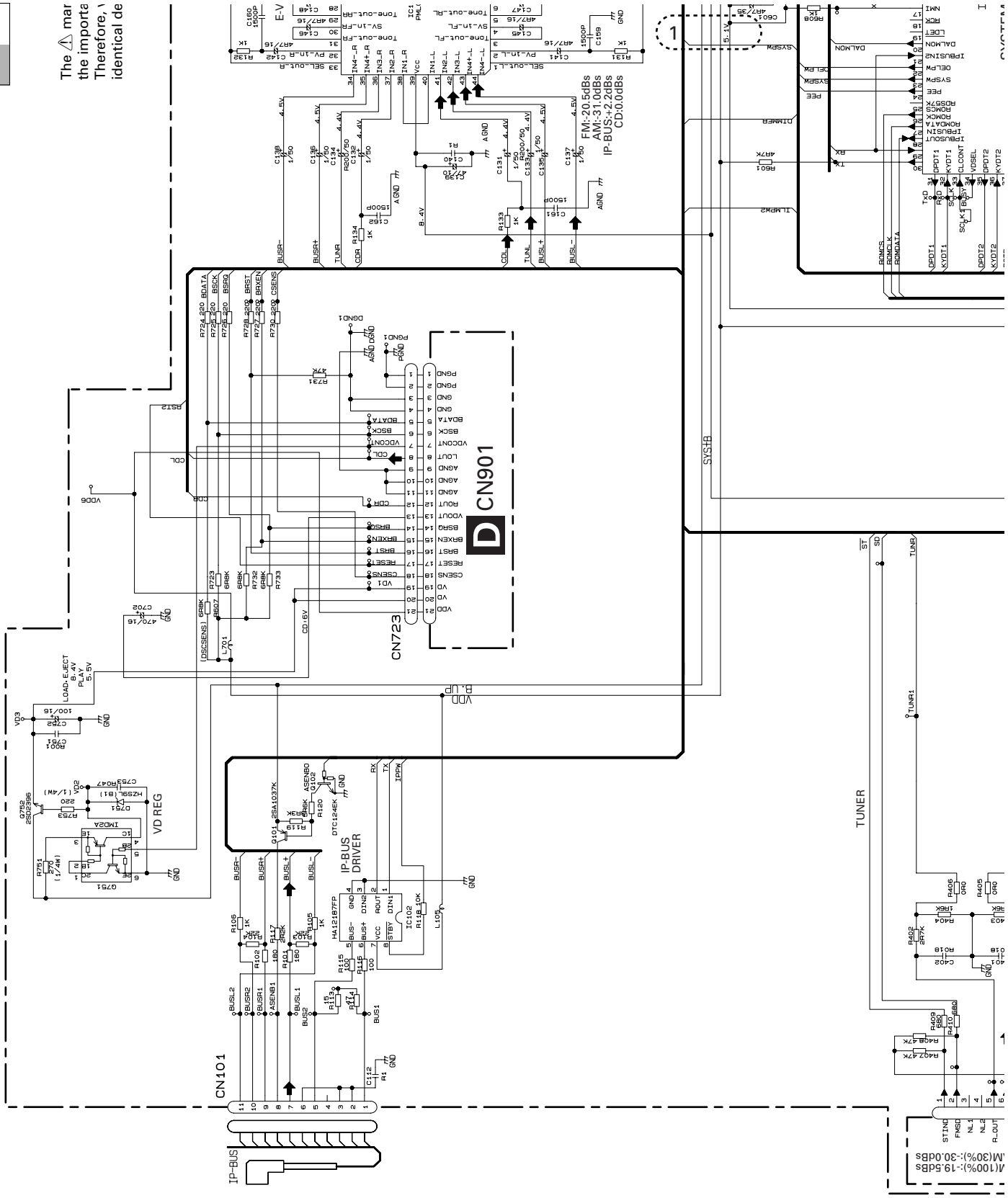

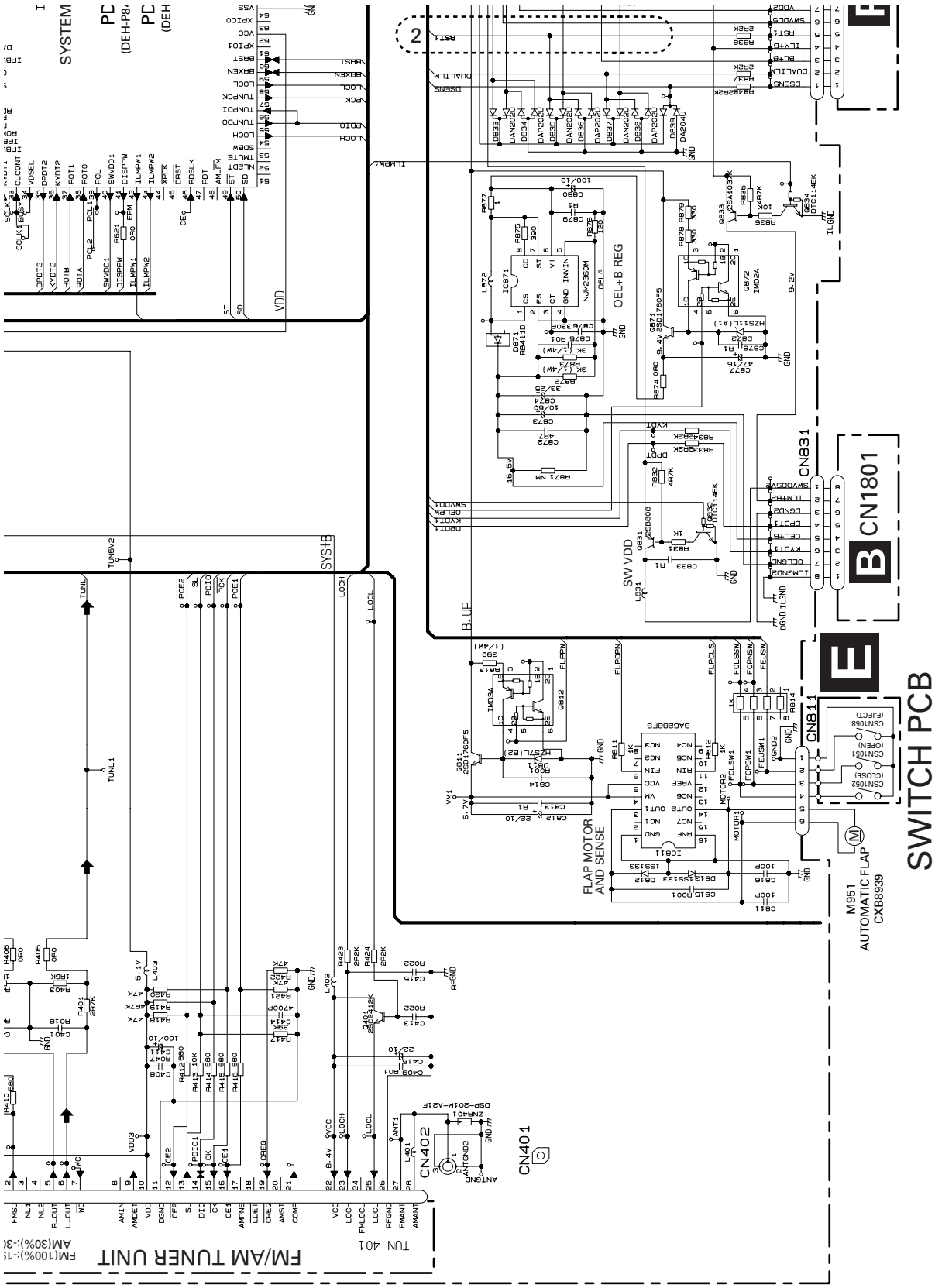
SYSTEM
OEL+B REG
SW VDD
B CN1801
CN831
SWITCH PCB
CN811
FLAP MOTOR AND SENSE
M951
AUTOMATIC FLAP
CXB8939
CN402
CN401
FM/AM TUNER UNIT
TUN 401

A-a A-b

A TUNER AMP UNIT

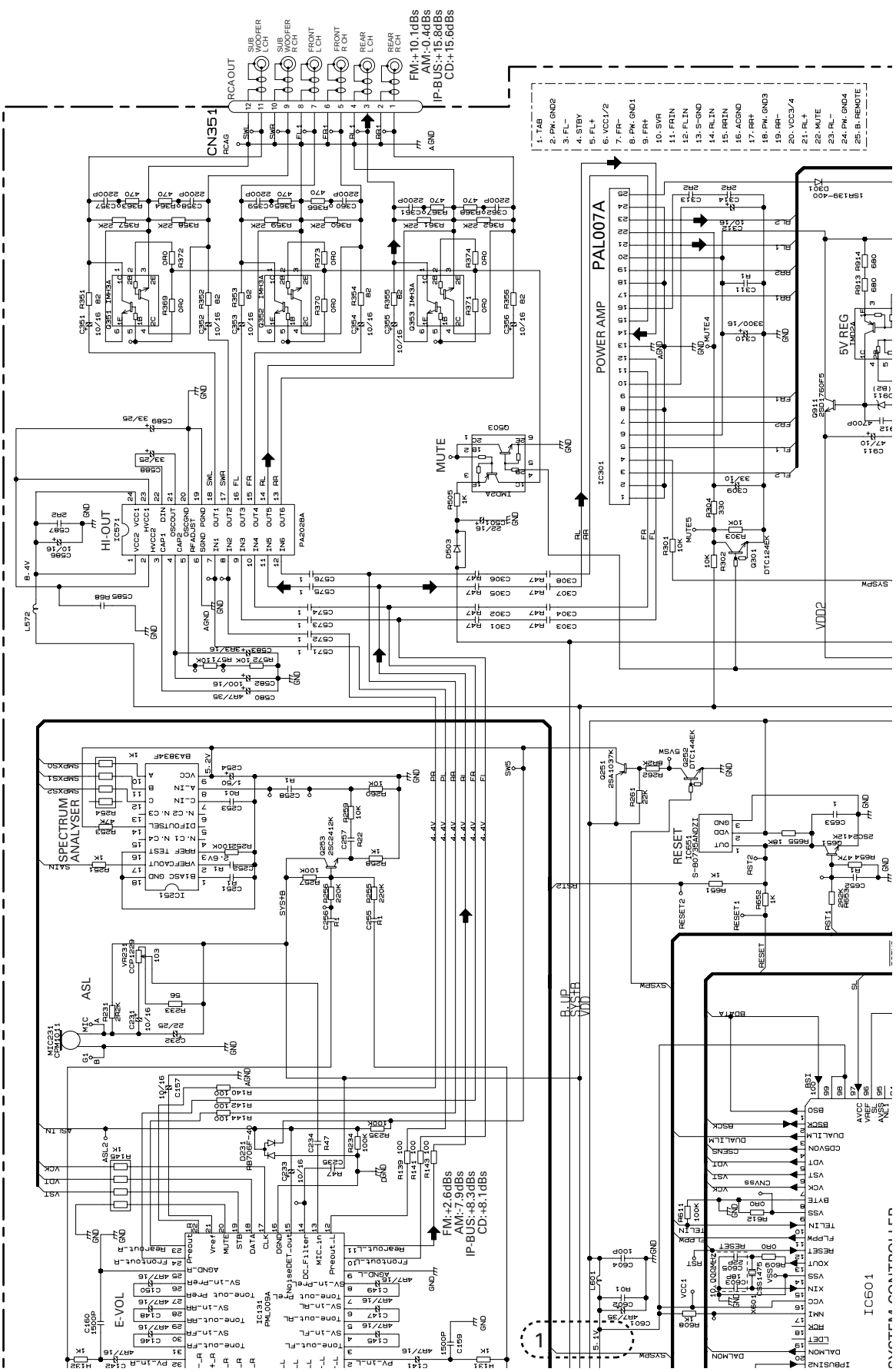

⚠ mark found on some component parts indicates importance of the safety factor of the part. Therefore, when replacing, be sure to use parts of identical designation.

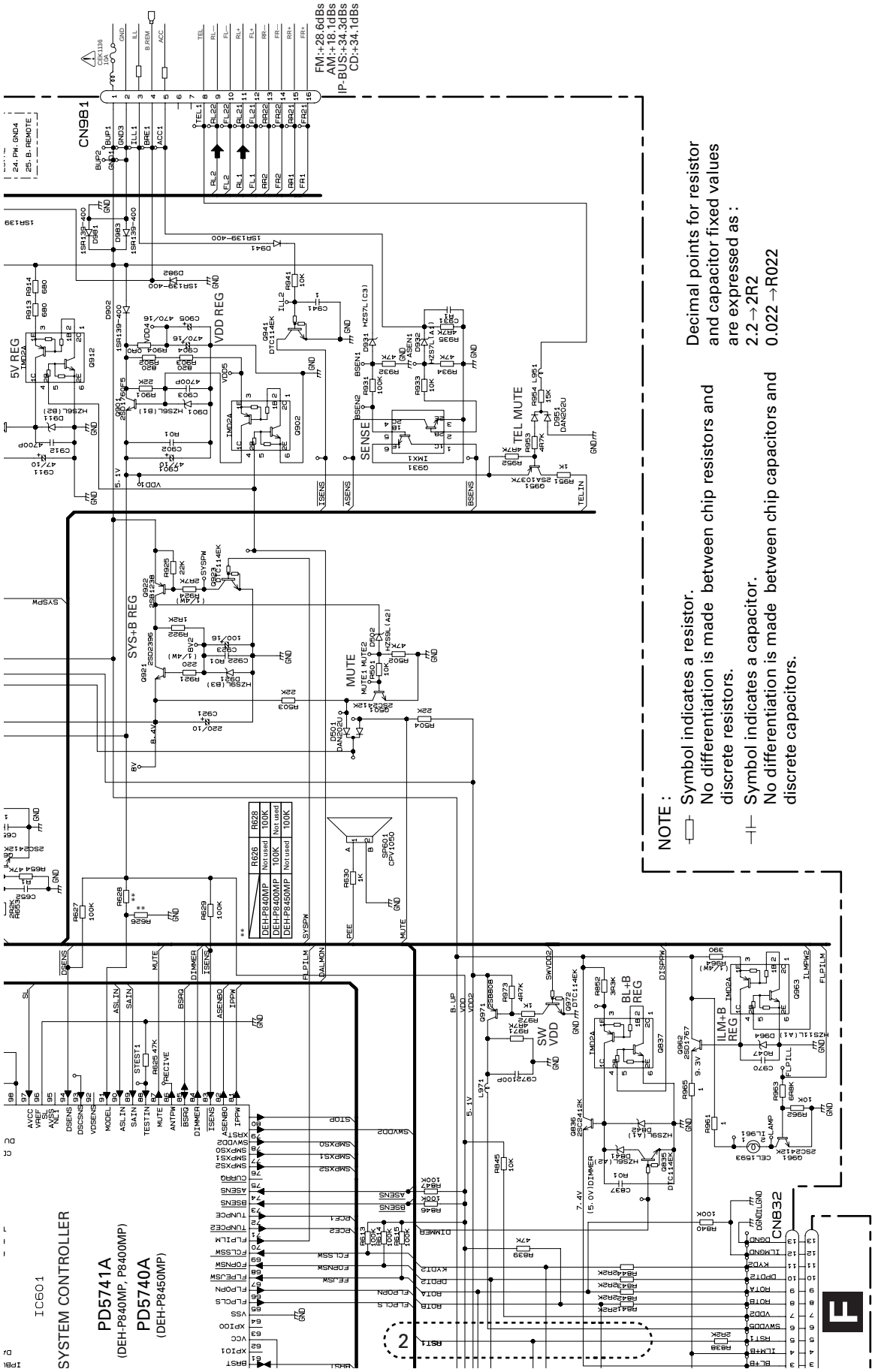
FM:+28.6dBs
AM:+18.1dBs
IP-BUS:+34.3dBs
CD:+34.1dBs
CN981
5V REG
VDD REG
SENSE
TEL MUTE
SYS+B REG
MUTE
BL+B REG
SW VDD
ILM+B REG
CN832
IC601
SYSTEM CONTROLLER
PD5741A
(DEH-P840MP, P8400MP)
PD5740A
(DEH-P8450MP)
NOTE :
Symbol indicates a resistor.
No differentiation is made between chip resistors and discrete resistors.
Symbol indicates a capacitor.
No differentiation is made between chip capacitors and discrete capacitors.
Decimal points for resistor and capacitor fixed values are expressed as :
2.2 → 2R2
0.022 → R022

3.3 KEYBOARD UNIT(OEL)

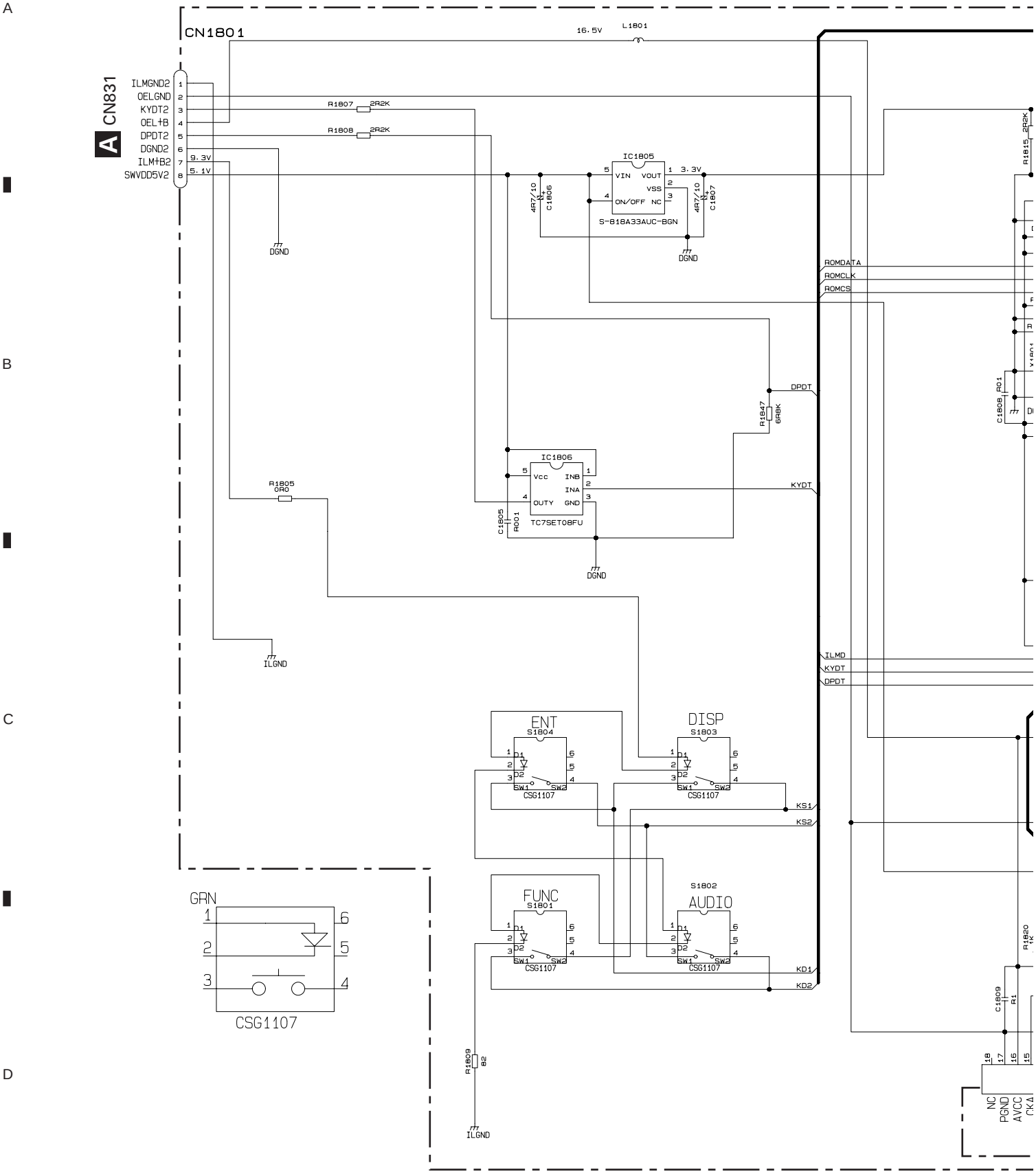

B KEYBOARD UNIT(OEL)

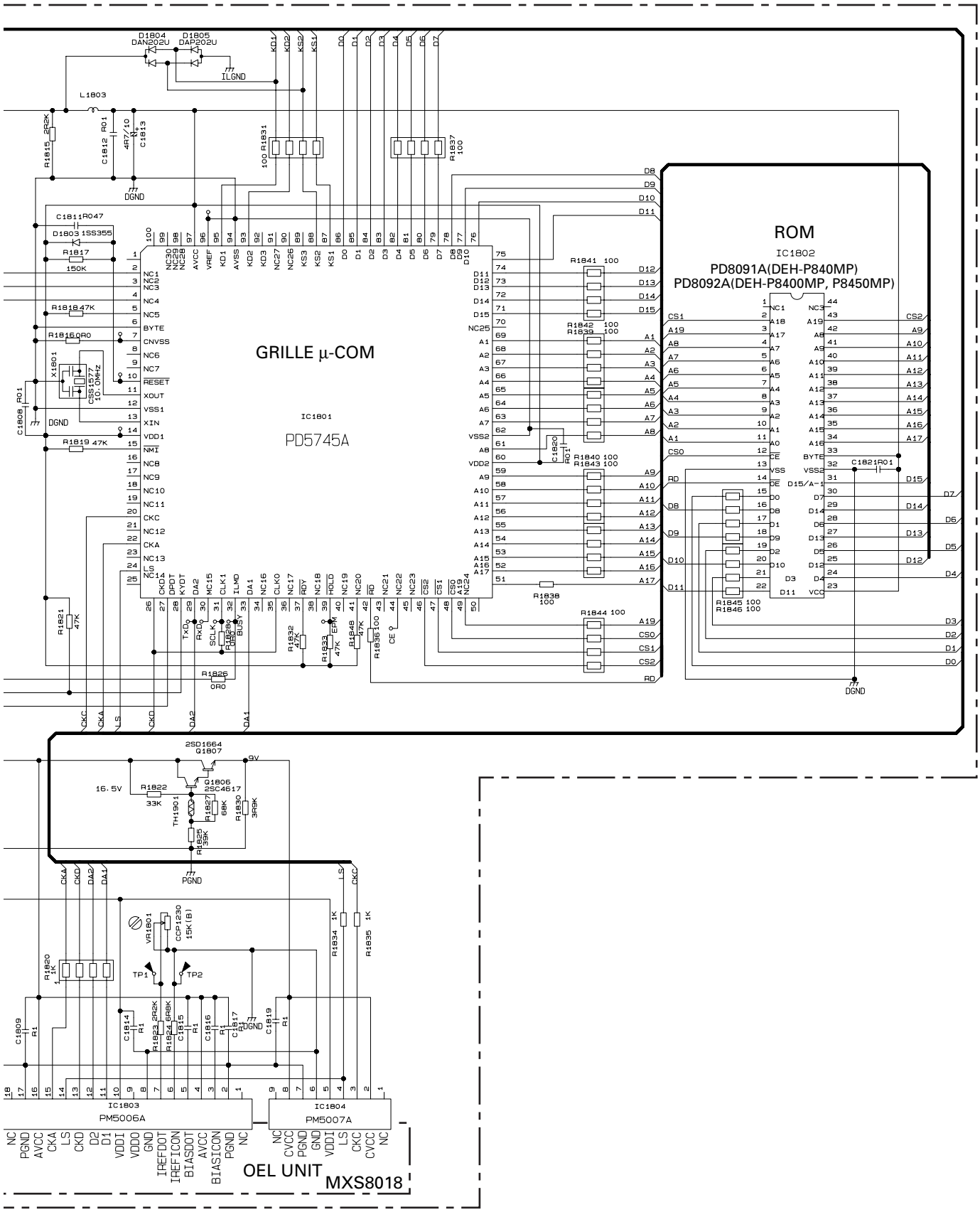

3.4 KEYBOARD UNIT(LCD)

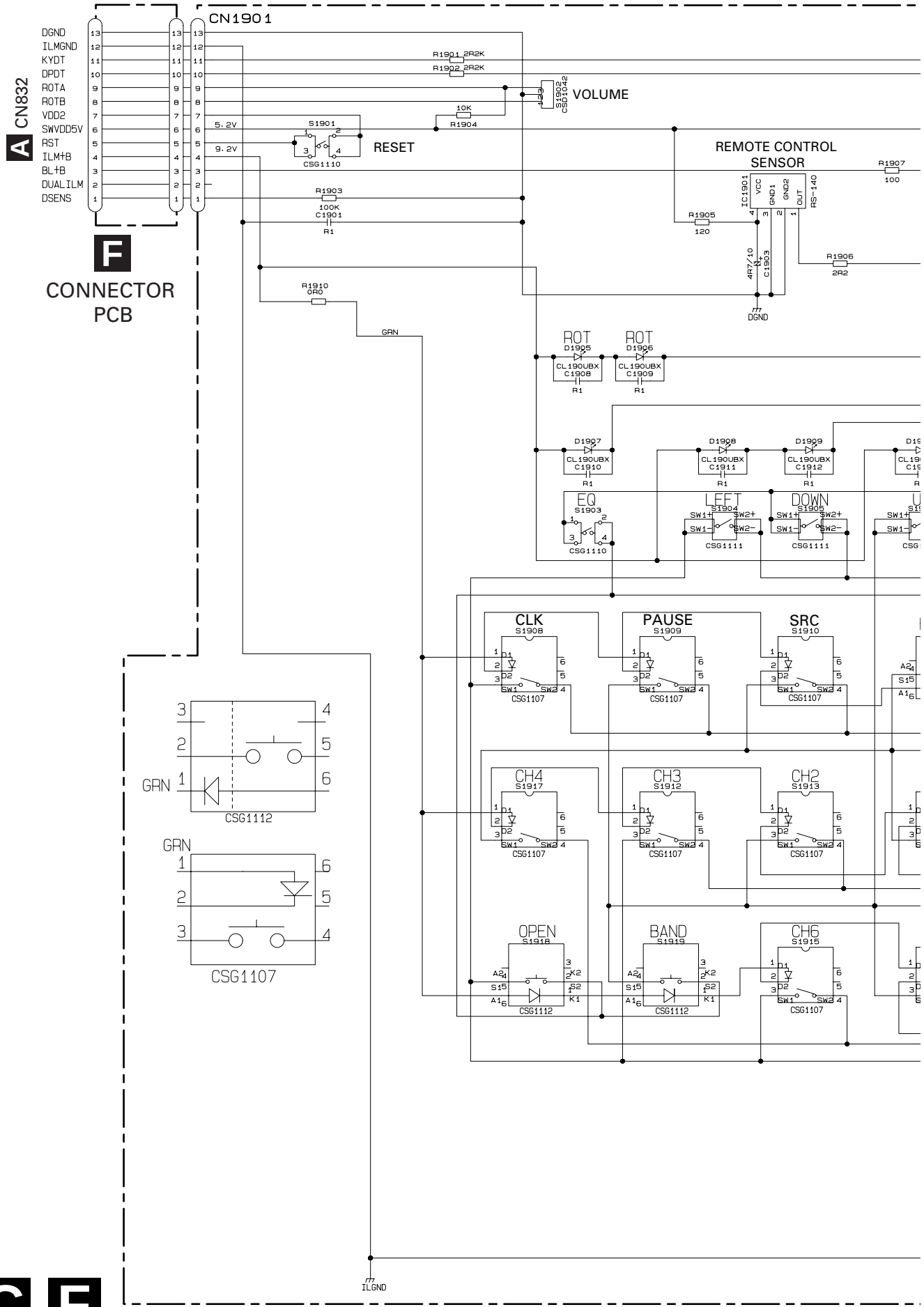

C KEYBOARD UNIT(LCD)

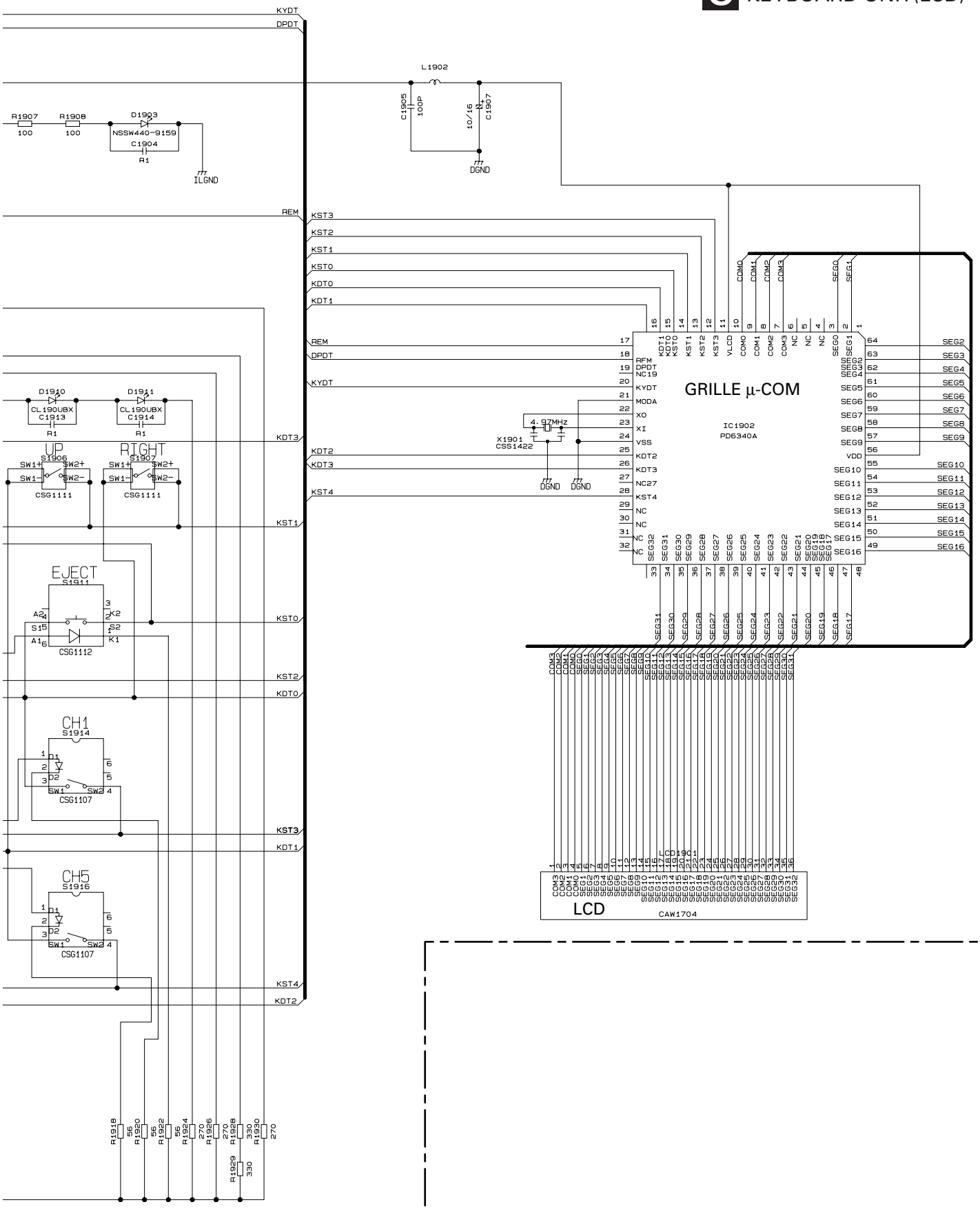

3.5 CD MECHANISM MODULE(GUIDE PAGE)

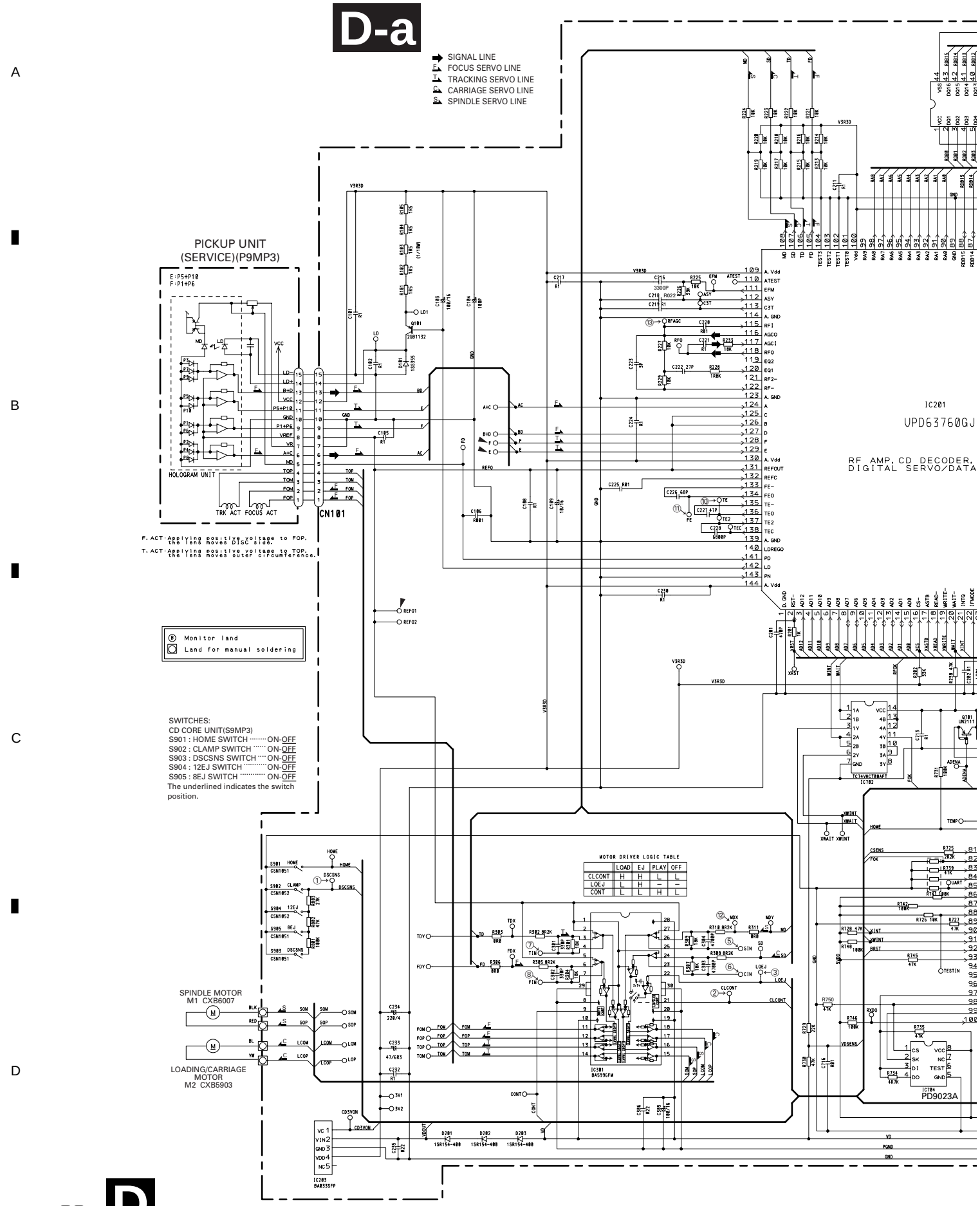

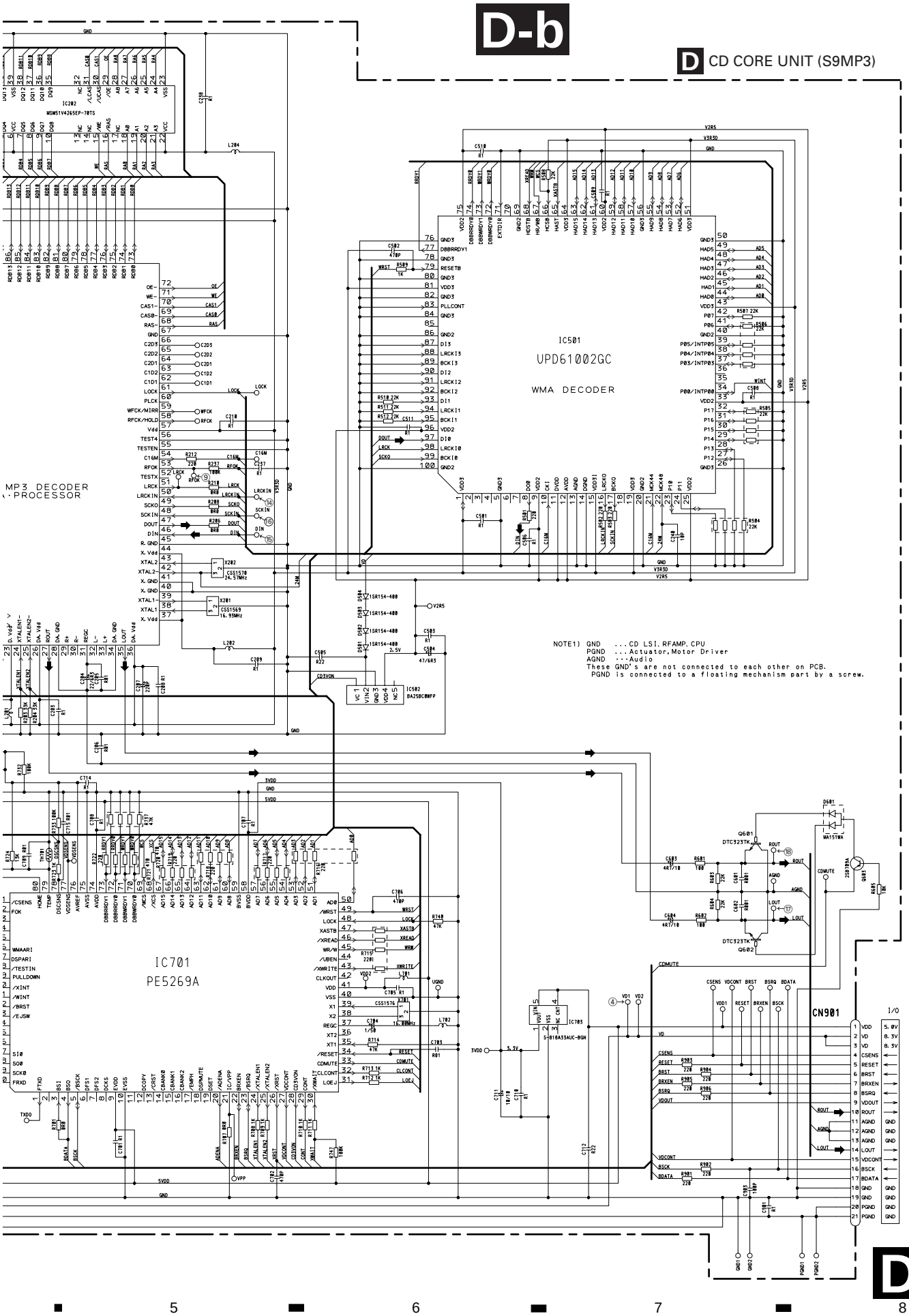
D-b
D CD CORE UNIT (S9MP3)
IC501
UPD61002GC
WMA DECODER
MP3 DECODER
PROCESSOR
IC701
PE5269A
CN901
CN723
NOTE1) GND ...CD LSI, RFAMP, CPU
PGND ...Actuator, Motor Driver
AGND ...Audio
These GND's are not connected to each other on PCB.
PGND is connected to a floating mechanism part by a screw.

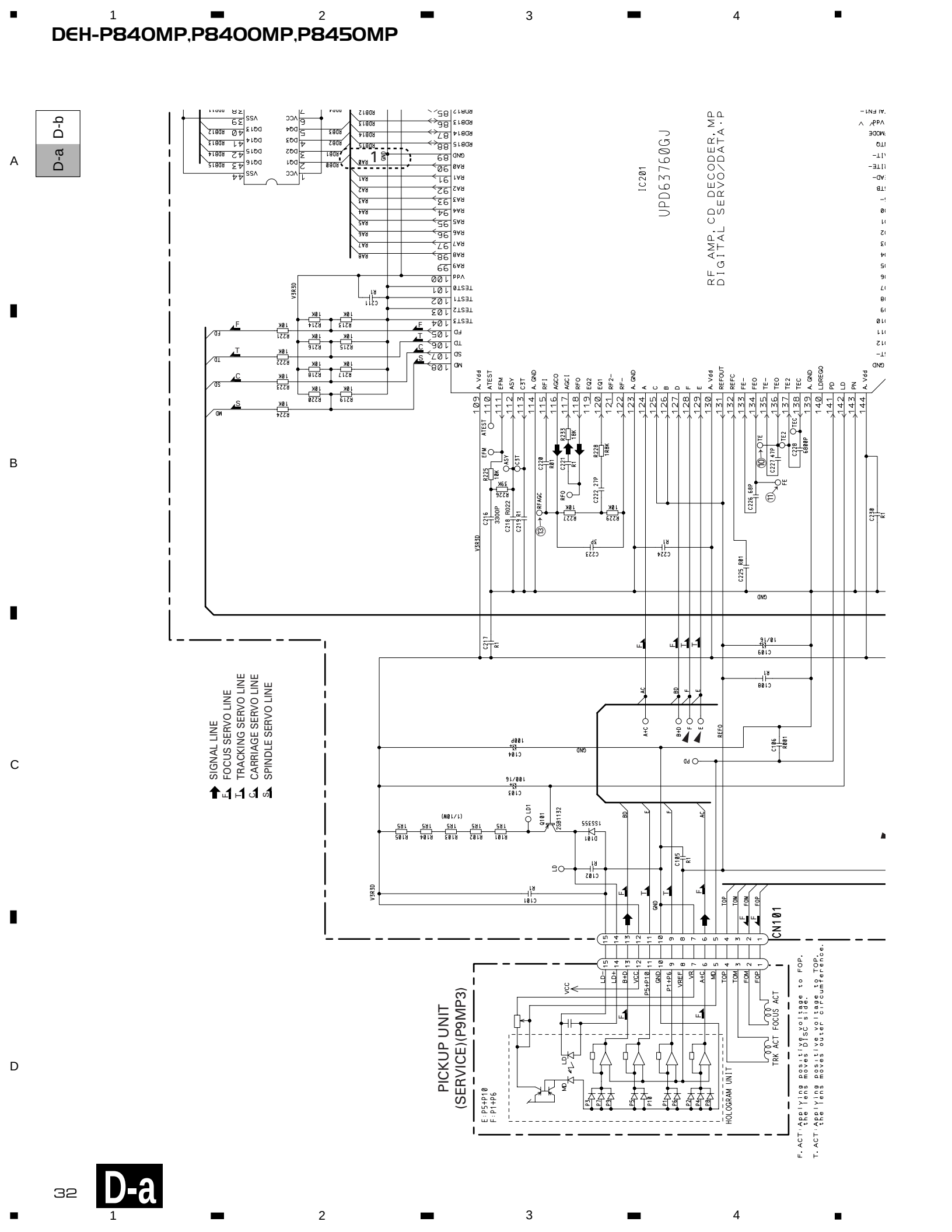
D-a D-b
IC201
UPD63760GJ
RF AMP, CD DECODER, MP
DIGITAL SERVO/DATA·P
SIGNAL LINE
FOCUS SERVO LINE
TRACKING SERVO LINE
CARRIAGE SERVO LINE
SPINDLE SERVO LINE
CN101
PICKUP UNIT
(SERVICE)(P9MP3)
E:P5+P10
F:P1+P6
HOLOGRAM UNIT
TRK ACT FOCUS ACT
F. ACT: Applying positive voltage to FOP, the lens moves DISC side.
T. ACT: Applying positive voltage to TOP, the lens moves outer circumference.

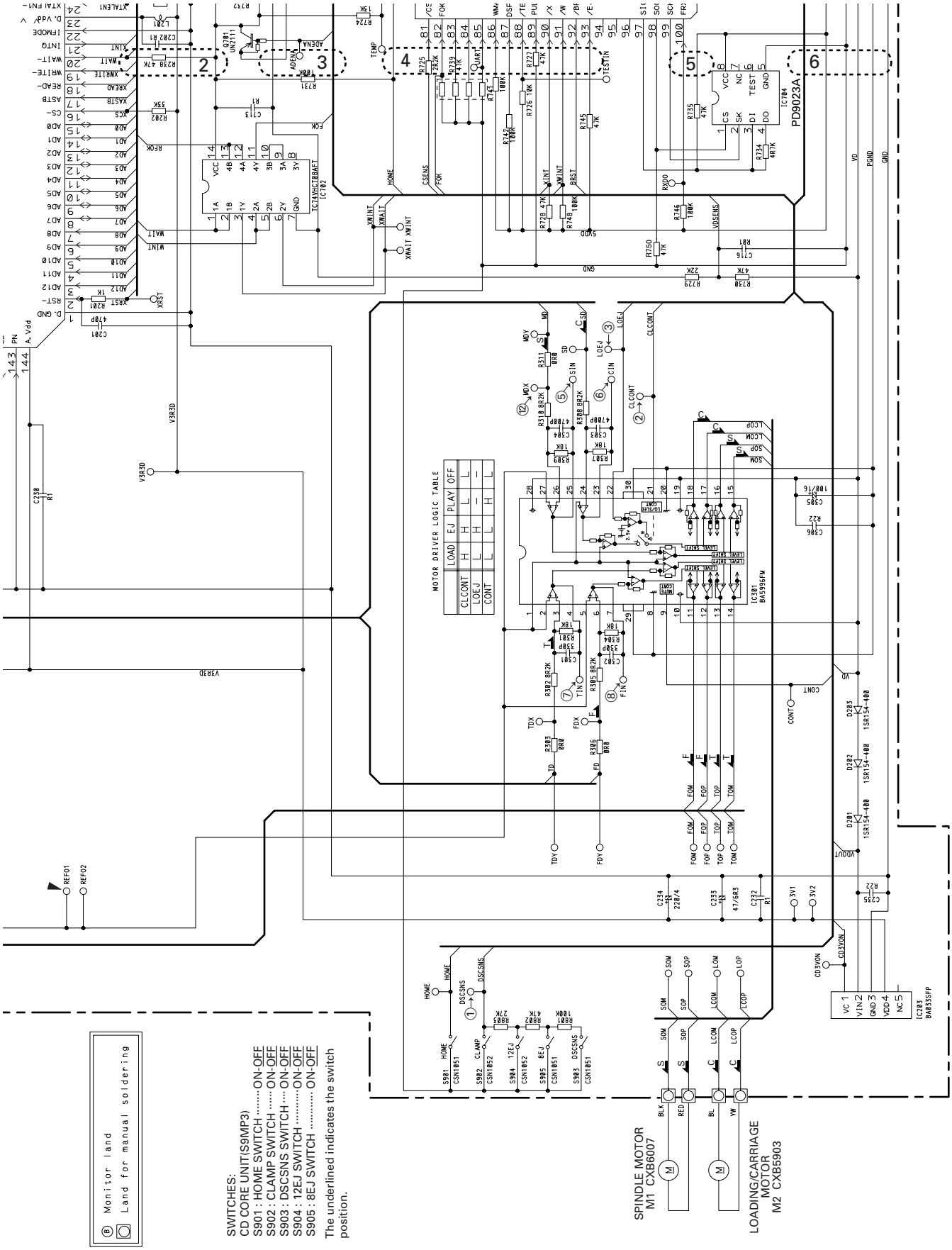
D-a D-b
PD9023A
IC704
IC702
TC74VHCT08AFT
IC301
BA5996FM
IC203
BA833SFP
MOTOR DRIVER LOGIC TABLE
CLCONT
LOEJ
CONT
LOAD
EJ
PLAY
OFF
SPINDLE MOTOR
M1 CXB6007
LOADING/CARRIAGE
MOTOR
M2 CXB5903
Monitor land
Land for manual soldering
SWITCHES:
CD CORE UNIT(S9MP3)
S901 : HOME SWITCH ····· ON-OFF
S902 : CLAMP SWITCH ····· ON-OFF
S903 : DSCSNS SWITCH ···· ON-OFF
S904 : 12EJ SWITCH ····· ON-OFF
S905 : 8EJ SWITCH ····· ON-OFF
The underlined indicates the switch position.

D-a D-b

D CD CORE UNIT (S9MP3)

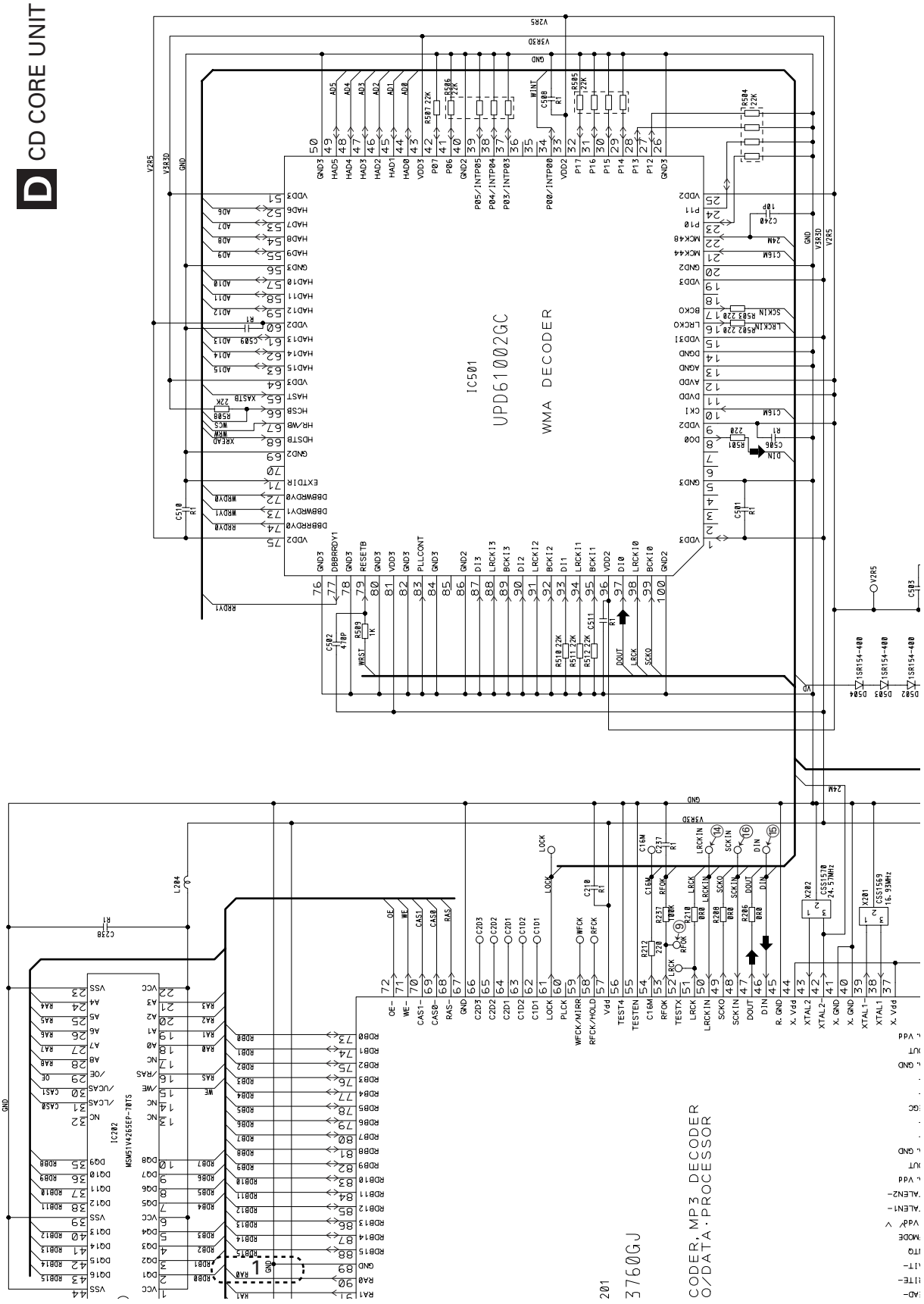

A CN723

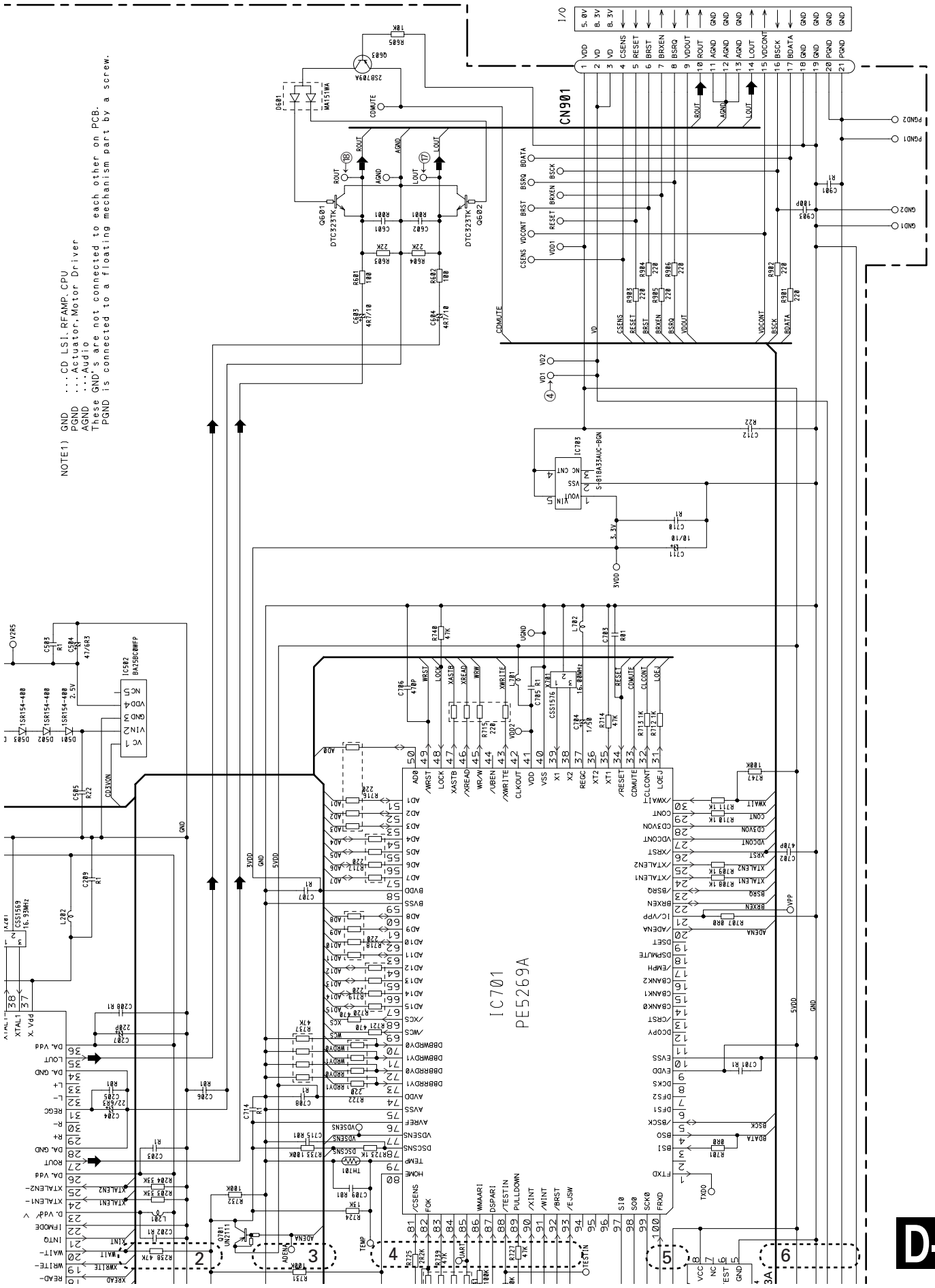
NOTE1) GND ...CD LSI, RFAMP, CPU
PGND ...Actuator, Motor Driver
AGND ...Audio
These GND's are not connected to each other on PCB.
PGND is connected to a floating mechanism part by a screw.
CN901
IC701
PE5269A
IC703
S-818A33AUC-BQN
IC502
BA25C00WFP
CN723
D-a D-b
D-b

Note:1. The encircled numbers denote measuring points in the circuit diagram.
2. Reference voltage
REFO1 : 1.65V

● Waveforms

① CH1:DSCSNS 5V/div.
② CH2:CLCONT 5V/div.
③ CH3:LOEJ 5V/div.
④ CH4:VD 10V/div.
500ms/div.
When loading a 12cm CD

Ref. : GND
Mode : Normal

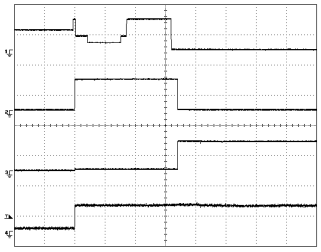

① CH1:DSCSNS 5V/div.
② CH2:CLCONT 5V/div.
③ CH3:LOEJ 5V/div.
④ CH4:VD 10V/div.
500ms/div.
When loading an 8cm CD

Ref. : GND
Mode : Normal

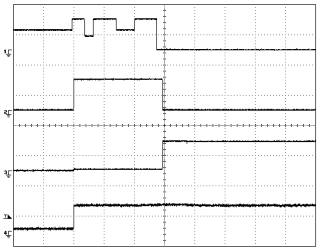

⑤ CH1:SIN 1V/div.
⑥ CH2:CIN 500mV/div.
⑦ CH3:TIN 500mV/div.
2s/div.
When setting up after loading a 12cm CD-DA disc

Ref. : REFO
Mode : Normal

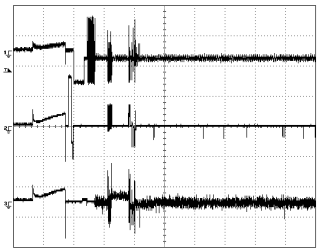

⑤ CH1:SIN 1V/div.
⑥ CH2:CIN 500mV/div.
⑦ CH3:TIN 500mV/div.
2s/div.
When setting up after loading a 12cm CD-ROM(1 session)

Ref. : REFO
Mode : Normal

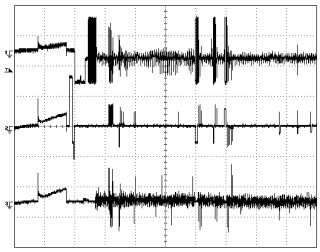

⑤ CH1:SIN 1V/div.
⑥ CH2:CIN 500mV/div.
⑦ CH3:TIN 500mV/div.
2s/div.
When setting up after loading a 12cm CD-ROM(2 session)

Ref. : REFO
Mode : Normal

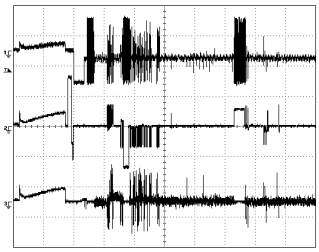

⑧ CH1:FIN 200mV/div.
⑨ CH2:RFOK 2V/div.
⑤ CH3:SIN 2V/div.
500ms/div.
When setting up "Source On" (12cm CD-DA)

Ref. : REFO
Mode : Normal

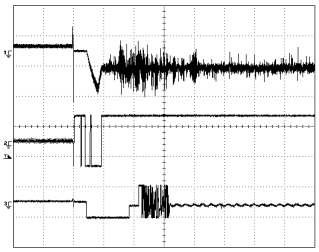

⑩ CH1:TE 500mV/div.
⑪ CH2:FE 500mV/div.
200ms/div.
When setting up "Source On"

Ref. : REFO
Mode : Normal

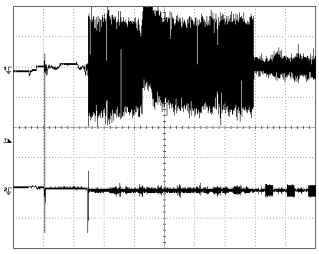

⑪ CH1:FE 500mV/div.
⑧ CH2:FIN 500mV/div.
⑩ CH3:TE 500mV/div.
⑦ CH4:TIN 500mV/div.
20ms/div.
During "Play" (CD-DA)

Ref. : REFO
Mode : Normal

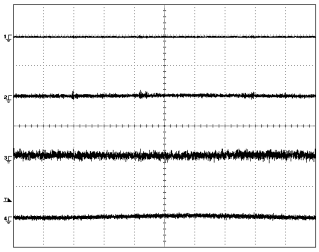

⑪ CH1:FE 500mV/div.
⑧ CH2:FIN 500mV/div.
⑩ CH3:TE 500mV/div.
⑦ CH4:TIN 500mV/div.
20ms/div.
During "Play"(CD-ROM, generating 1Track Jump periodically) Refer to "1Track Jump."

Ref. : REFO
Mode : Normal

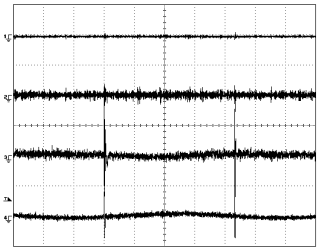

⑫ CH1:MDX 500mV/div.
⑤ CH2:SIN 1V/div.
5ms/div.
Spindle waveform during "Play"

Ref. : REFO
Mode : Normal

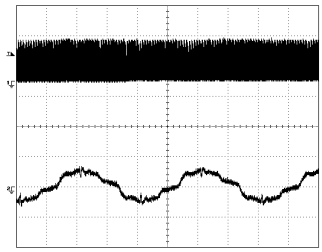

⑫ CH1:MDX 500mV/div.
⑤ CH2:SIN 1V/div.
5μs/div.
Spindle waveform during "Play" (Magnified)

Ref. : REFO
Mode : Normal

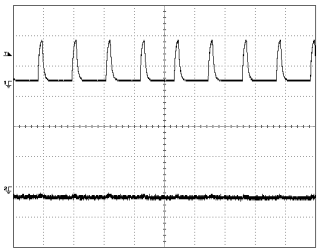

⑬ CH1:RFAGC 500mV/div.
5μs/div.
RF eye pattern

Ref. : REFO
Mode : Normal

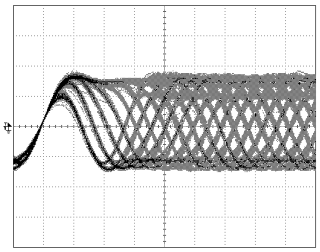

⑧ CH1:FIN 500mV/div.
⑪ CH2:FE 500mV/div.
200ms/div.

Focus Search

Ref. : REFO
Mode : TEST

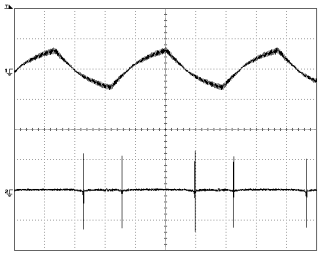

⑩ CH1:TE 500mV/div.
⑬ CH2:RFAGC 500mV/div.
2ms/div.

When "Tracking Open"

Ref. : REFO
Mode : TEST

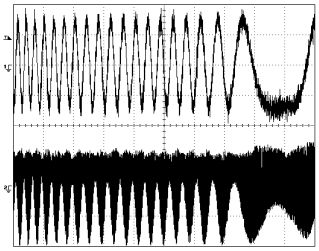

⑬ CH1:RFAGC 1V/div.
⑩ CH2:TE 500mV/div.
⑦ CH3:TIN 500mV/div.
500μs/div.

1Track Jump

Ref. : REFO
Mode : TEST

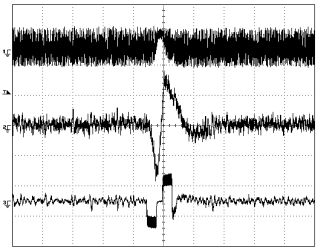

⑬ CH1:RFAGC 1V/div.
⑩ CH2:TE 500mV/div.
⑦ CH3:TIN 500mV/div.
1ms/div.

32Track Jump

Ref. : REFO
Mode : TEST

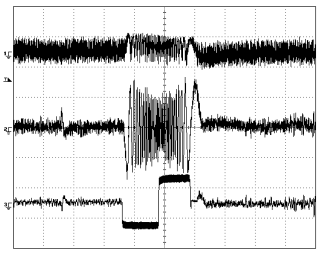

⑬ CH1:RFAGC 1V/div.
⑩ CH2:TE 500mV/div.
⑦ CH3:TIN 500mV/div.
5ms/div.

100Track Jump

Ref. : REFO
Mode : TEST

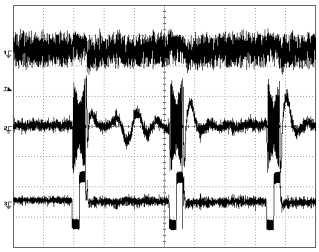

⑬ CH1:RFAGC 1V/div.
⑦ CH2:TIN 1V/div.
⑩ CH3:TE 1V/div.
⑧ CH4:FIN 1V/div.
500μs/div.

When reproducing black dots(800μm)

Ref. : REFO
Mode : Normal

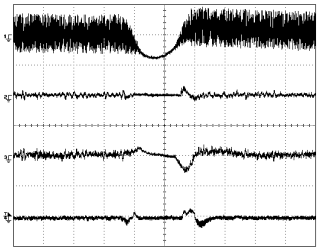

⑬ CH1:RFAGC 1V/div.
⑩ CH2:TE 1V/div.
⑥ CH3:CIN 500mV/div.
⑤ CH4:SIN 2V/div.
500μs/div.

During inside/outside search (outer circumference → inner circumference)

Ref. : REFO
Mode : Normal

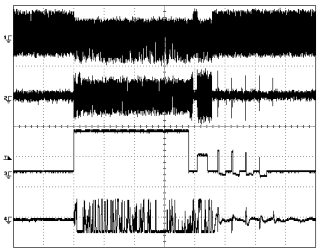

⑭ CH1:LRCKIN 2V/div.
⑮ CH2:DIN 2V/div.
⑯ CH3:SCKIN 2V/div.
10μs/div.

Digital Audio

Ref. : GND
Mode : Normal

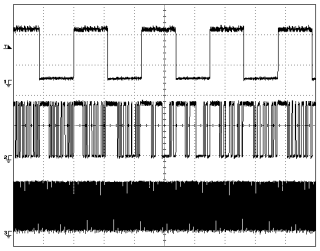

⑭ CH1:LRCKIN 2V/div.
⑮ CH2:DIN 2V/div.
⑯ CH3:SCKIN 2V/div.
2μs/div.

Digital Audio (Magnified)

Ref. : REFO
Mode : Normal

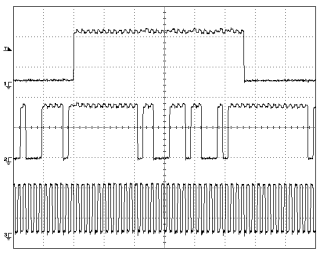

⑰ CH1:LOUT 1V/div.
⑱ CH2:ROUT 1V/div.
200μs/div.

Analog Audio (Magnified)

Ref. : AGND
Mode : Normal

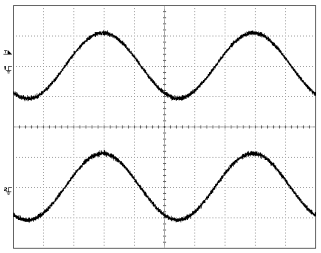

① CH1:DSCSNS 5V/div.
② CH2:CLCONT 5V/div.
③ CH3:LOEJ 5V/div.
10μs/div.

When "Eject" (12cm CD)

Ref. : GND
Mode : Normal

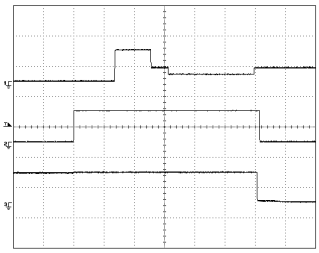

① CH1:DSCSNS 5V/div.
② CH2:CLCONT 5V/div.
③ CH3:LOEJ 5V/div.
10μs/div.

When "Eject" (8cm CD)

Ref. : GND
Mode : Normal

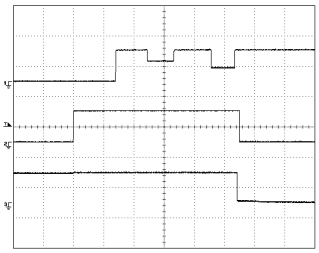

4. PCB CONNECTION DIAGRAM

4.1 TUNER AMP UNIT

NOTE FOR PCB DIAGRAMS

1. The parts mounted on this PCB include all necessary parts for several destination.
   For further information for respective destinations, be sure to check with the schematic diagram.
2. Viewpoint of PCB diagrams

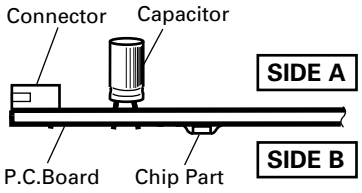

A TUNER AMP UNIT

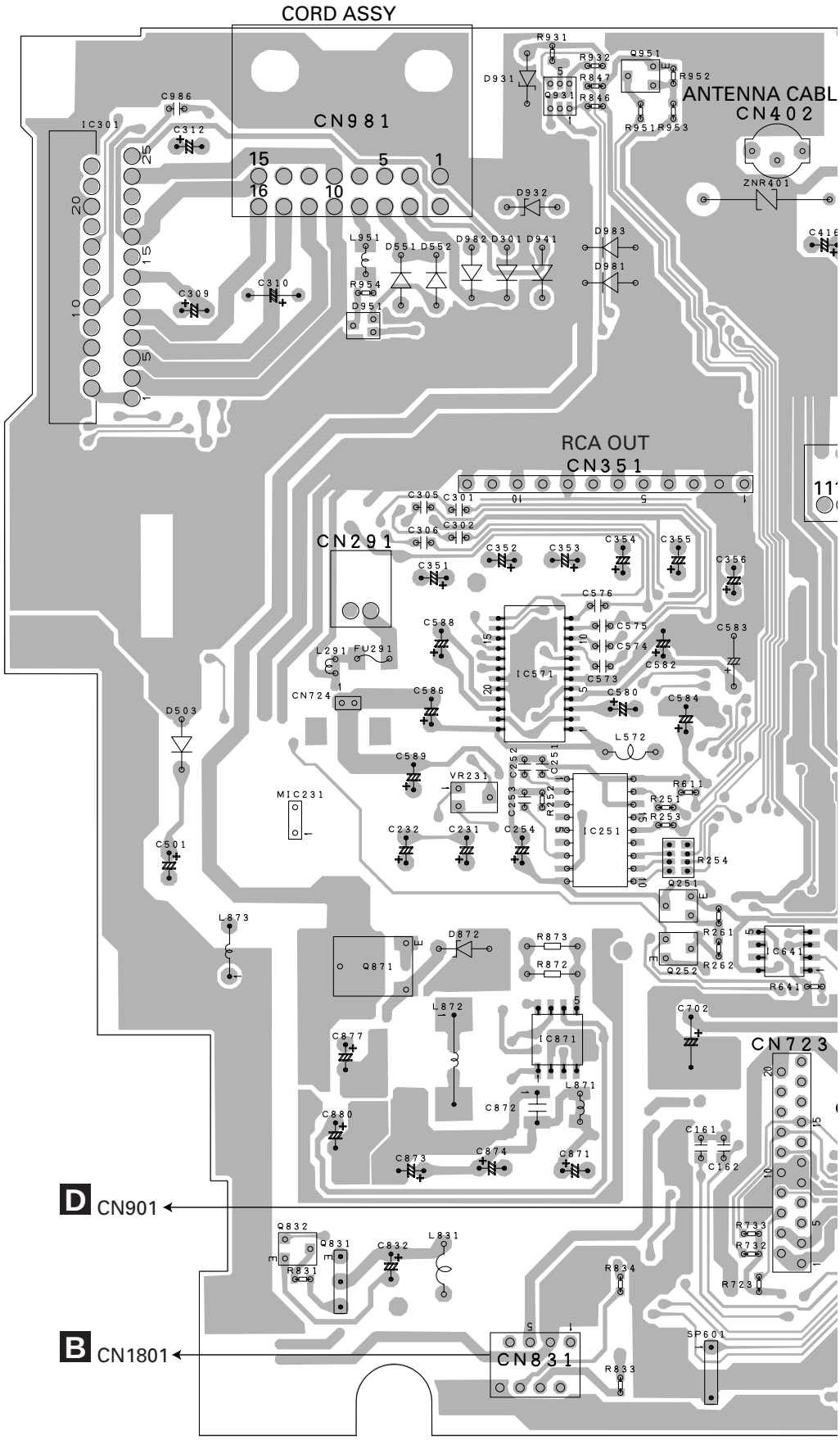

SIDE A

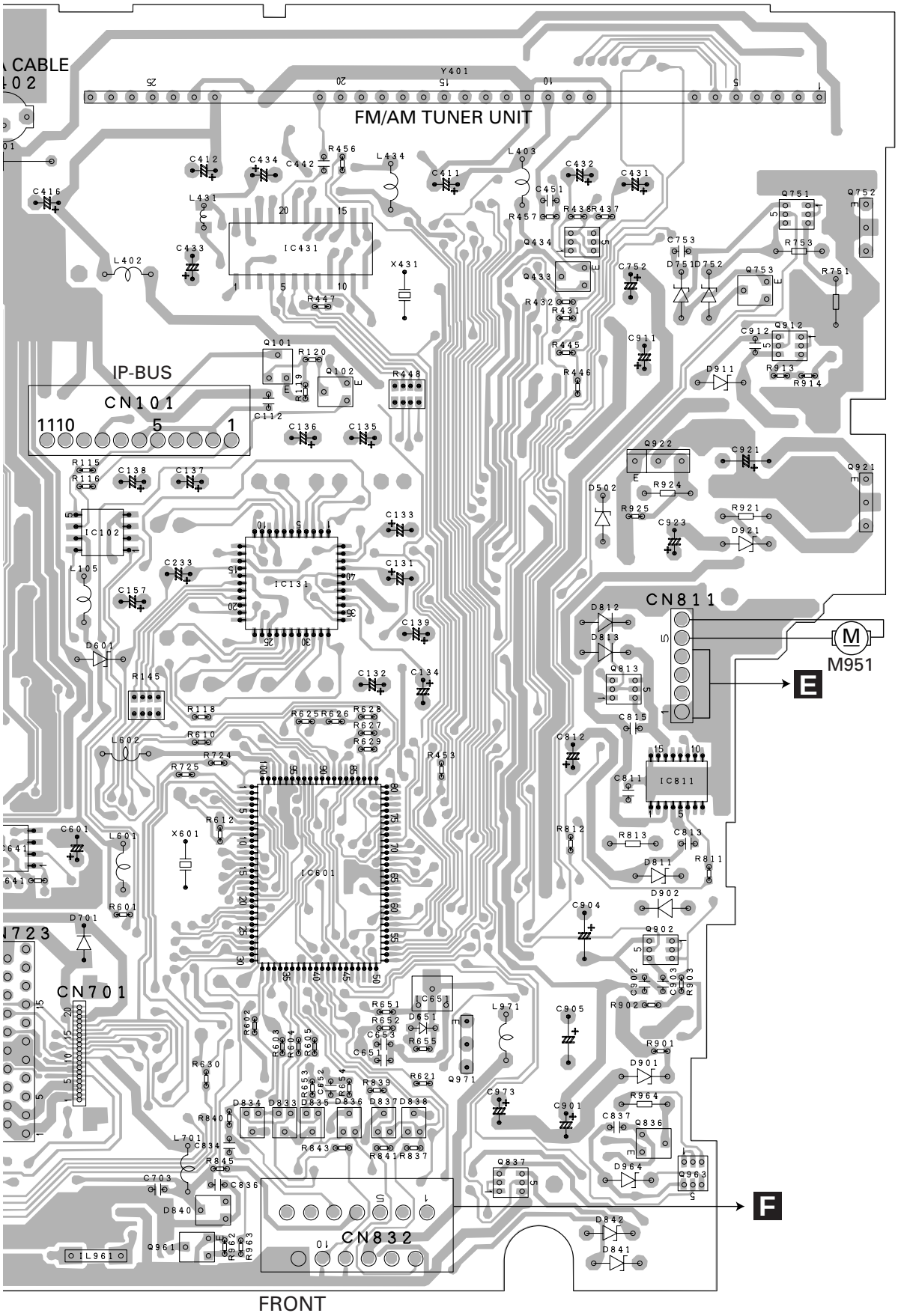

IC,Q
Q951
Q931
IC301
Q752 Q751
Q434
IC431
Q753 Q433
Q912
Q101 Q102
Q922
Q921
IC102
IC131
IC571
Q813
IC251
IC811 Q251
Q252 IC641
Q871
IC601
IC871 Q902
IC651
Q971
Q832
Q831 Q836
Q837
Q963
Q961

A TUNER AMP UNIT

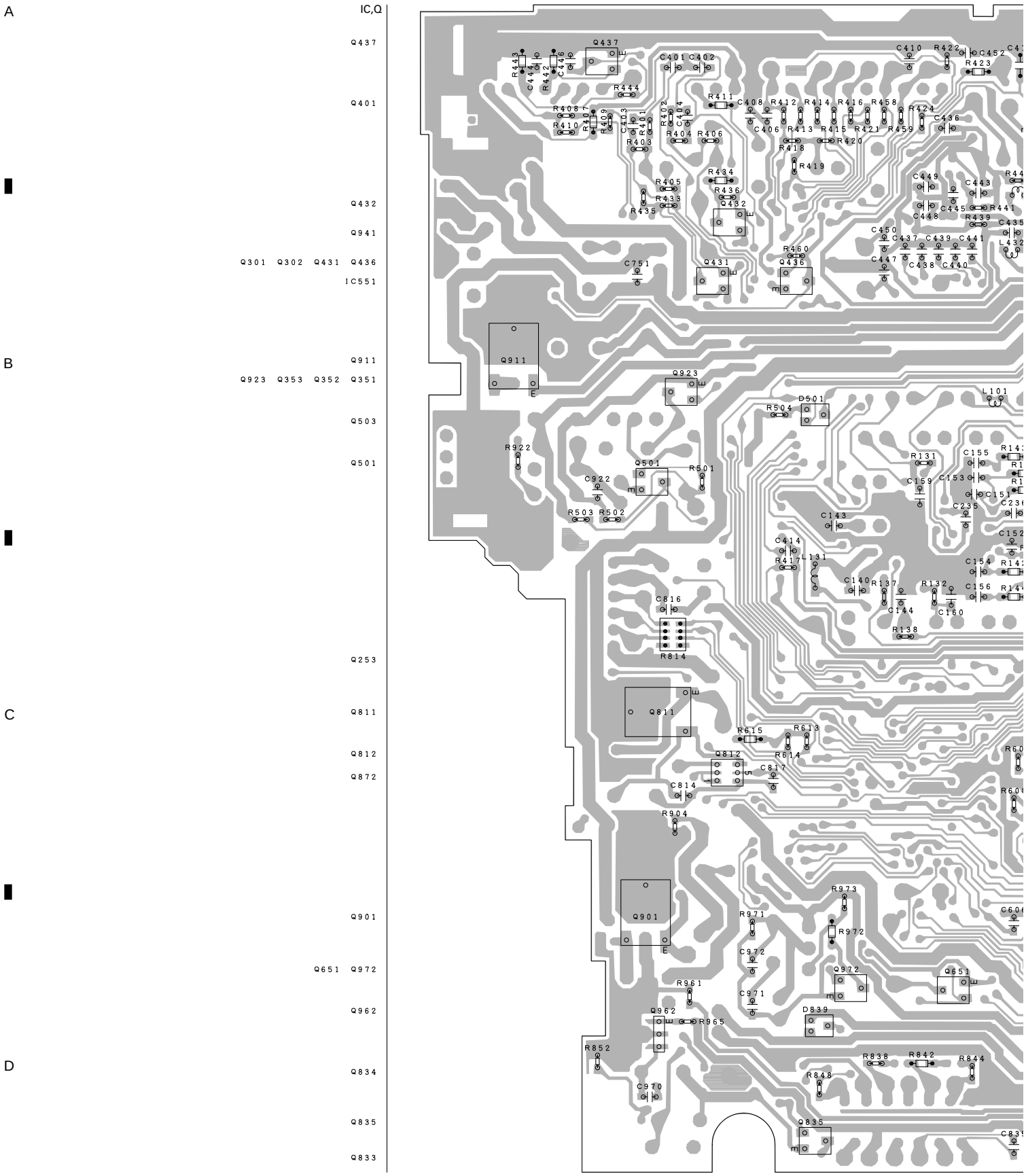

SIDE B

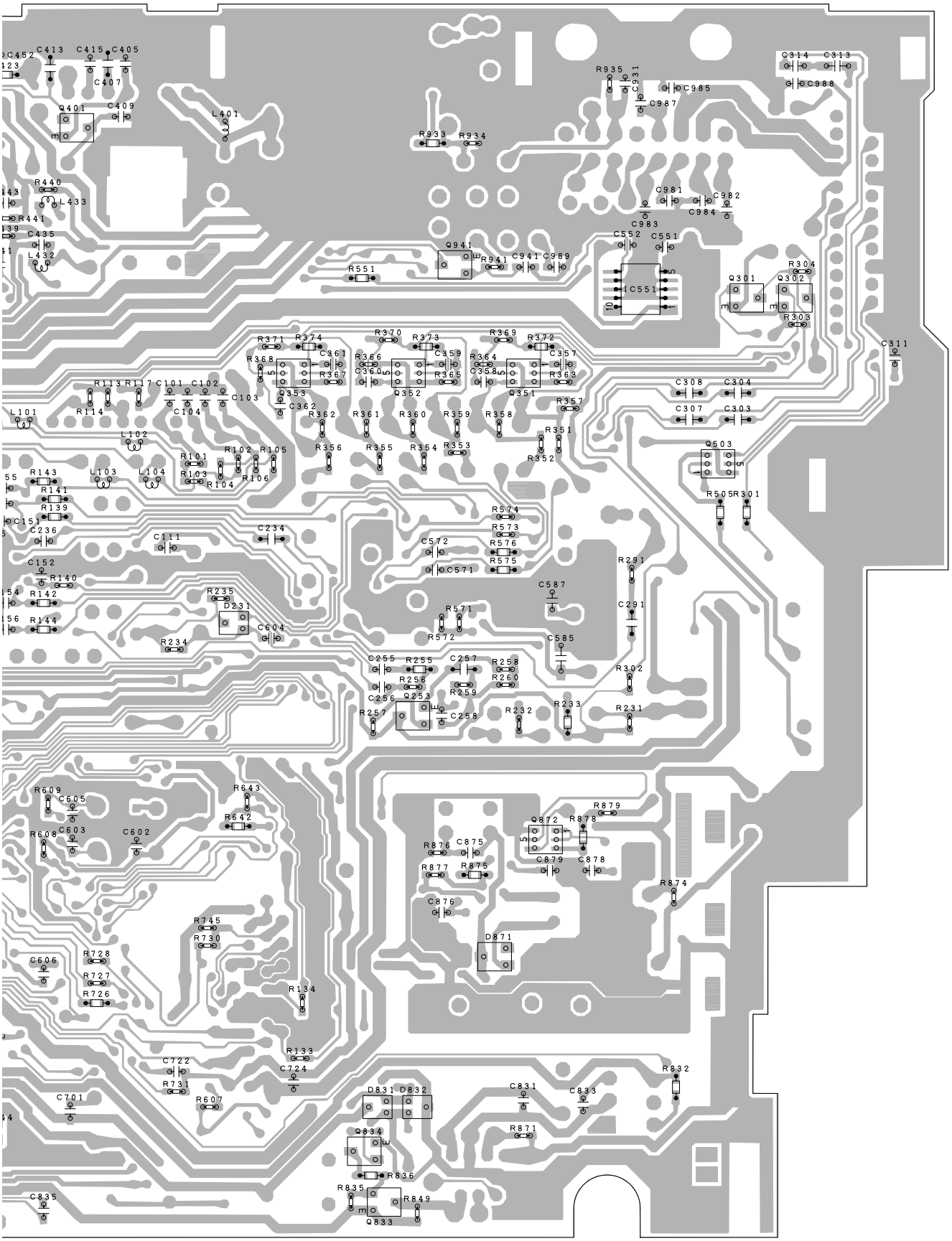
C452
C413
C415
C405
C407
Q401
C409
L401
R933
R934
R935
C331
C985
C987
C314
C313
C988
R440
L433
R441
C435
L432
C981
C982
C984
C983
C552
C551
Q941
R941
C941
C989
R551
IC551
Q301
Q302
R304
R303
C311
R371
R374
R370
R373
R369
R372
R368
C361
R366
C359
R364
C357
R367
C360
R365
C358
R363
Q353
Q352
Q351
R113
R117
C101
C102
C103
C104
R114
C362
R362
R361
R360
R359
R358
R357
C308
C304
C307
C303
L101
L102
R351
R352
R101
R102
R105
R103
R104
R106
R356
R355
R354
R353
Q503
R143
L103
L104
R141
R139
R505
R301
C151
C236
C234
C111
R574
R573
R576
R575
C572
C571
C152
R140
R142
R144
R235
D231
C604
R234
R291
C587
C291
R571
R572
C585
C255
R255
C257
R258
R256
R260
R259
C256
Q253
R257
C258
R232
R233
R231
R302
R609
C605
R643
R642
R608
C603
C602
Q872
R878
R879
R876
C875
C879
C878
R877
R875
C876
R874
R745
R730
D871
C606
R728
R727
R726
R134
R133
C722
C724
R731
R607
C701
D831
D832
C831
C833
R832
Q834
R871
R836
R835
R849
Q833
C835

4.2 KEYBOARD UNIT(OEL)

B KEYBOARD UNIT(OEL) **SIDE A**

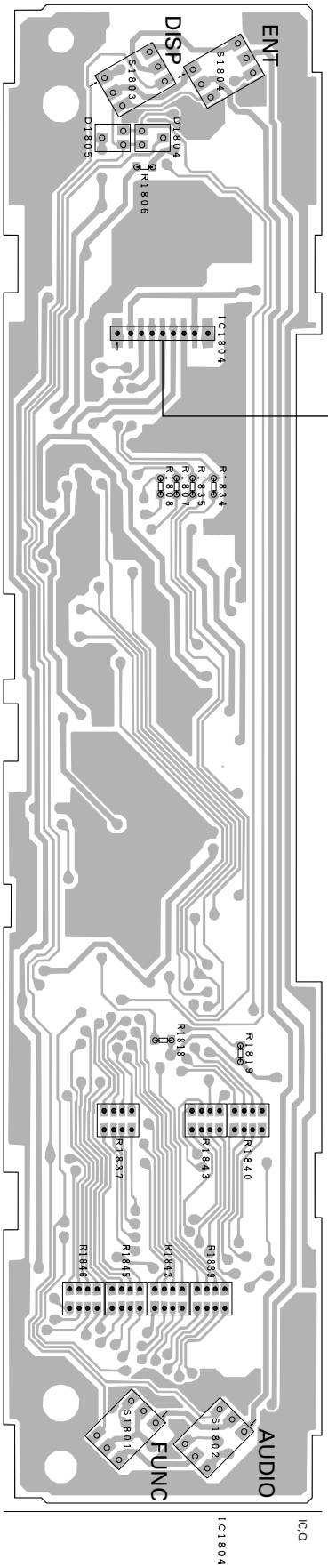

B KEYBOARD UNIT(OEL) **SIDE B**

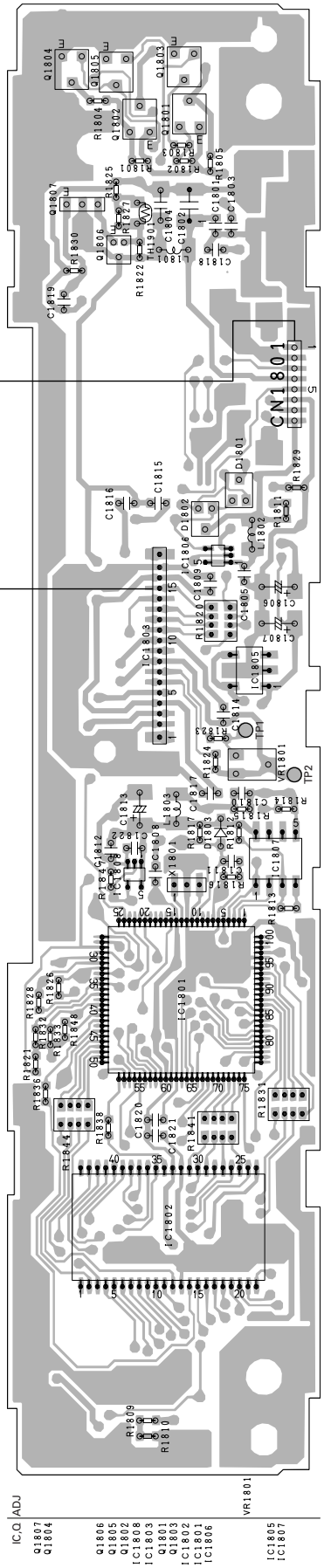

4.3 KEYBOARD UNIT(LCD)

C KEYBOARD UNIT(LCD) **SIDE A**

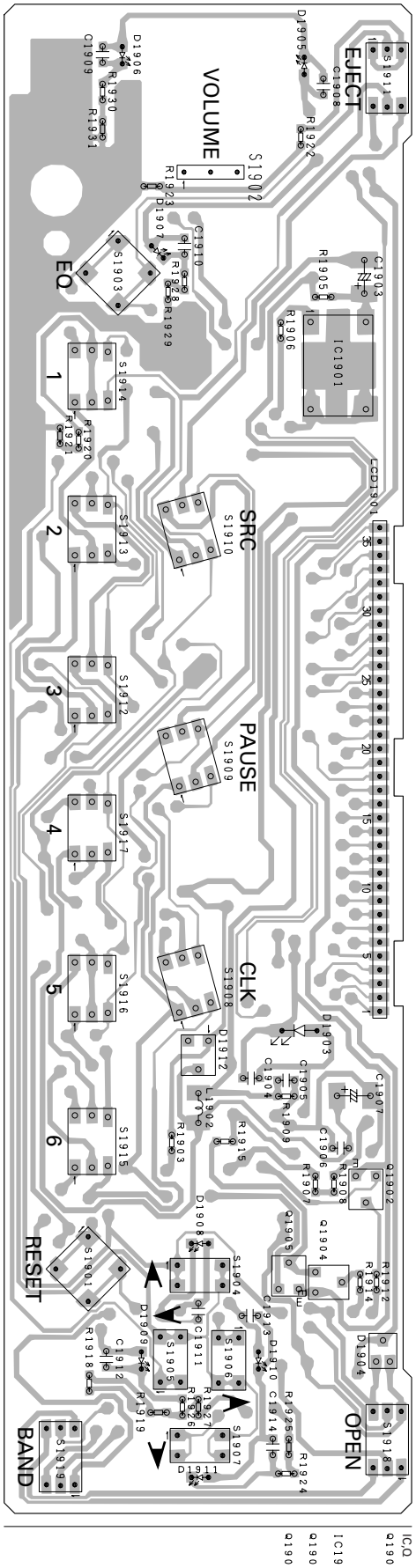

C KEYBOARD UNIT(LCD) **SIDE B**

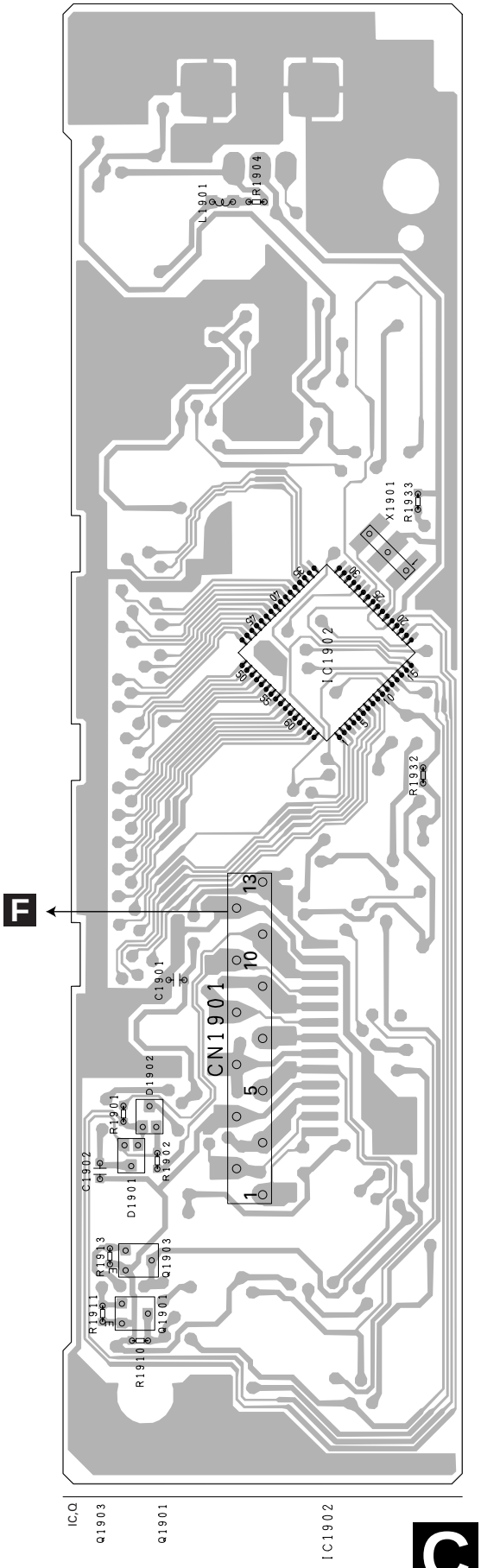

4.4 CD MECHANISM MODULE

D CD CORE UNIT (S9MP3)

SIDE A

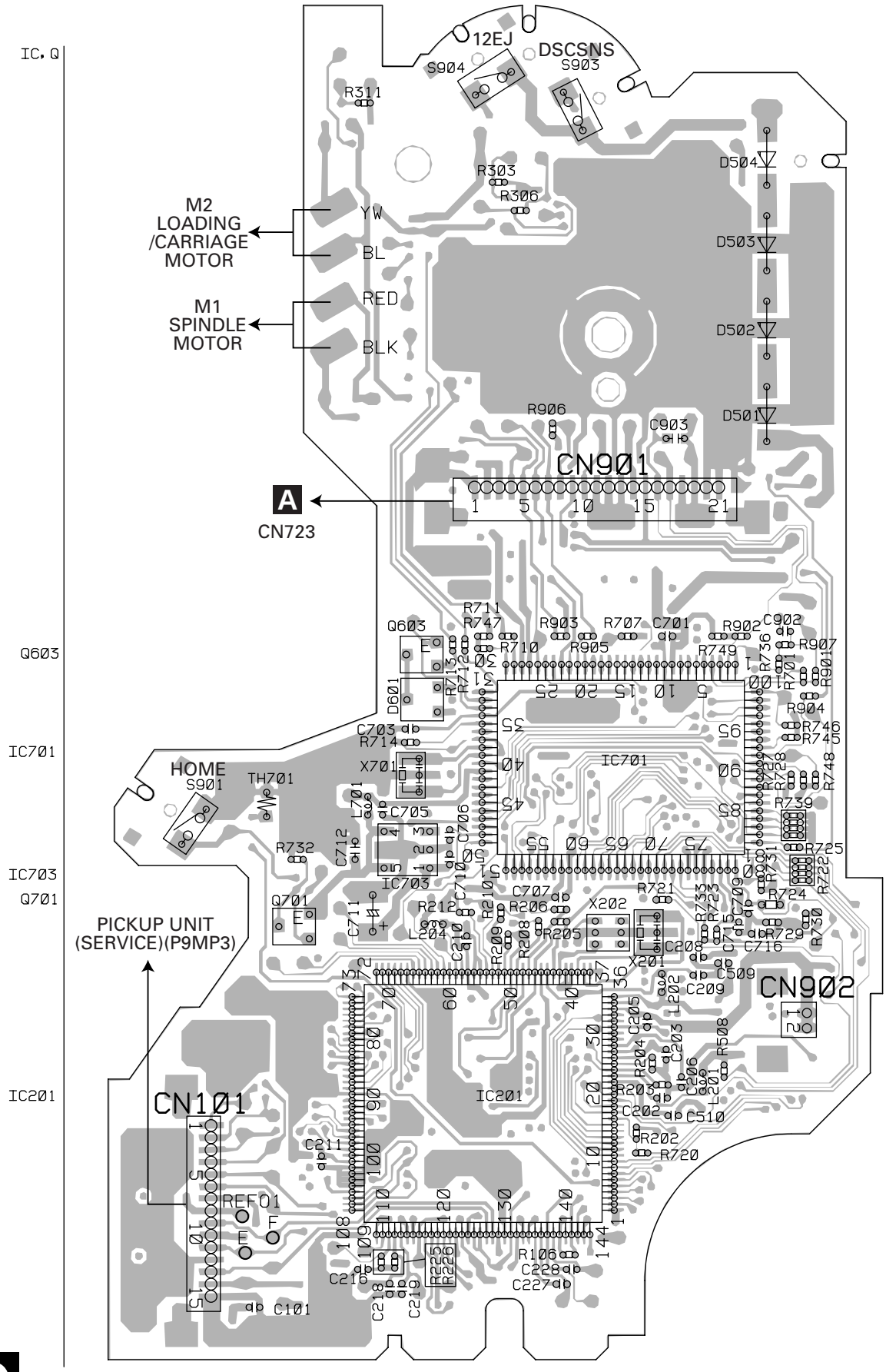

D CD CORE UNIT (S9MP3)

SIDE B

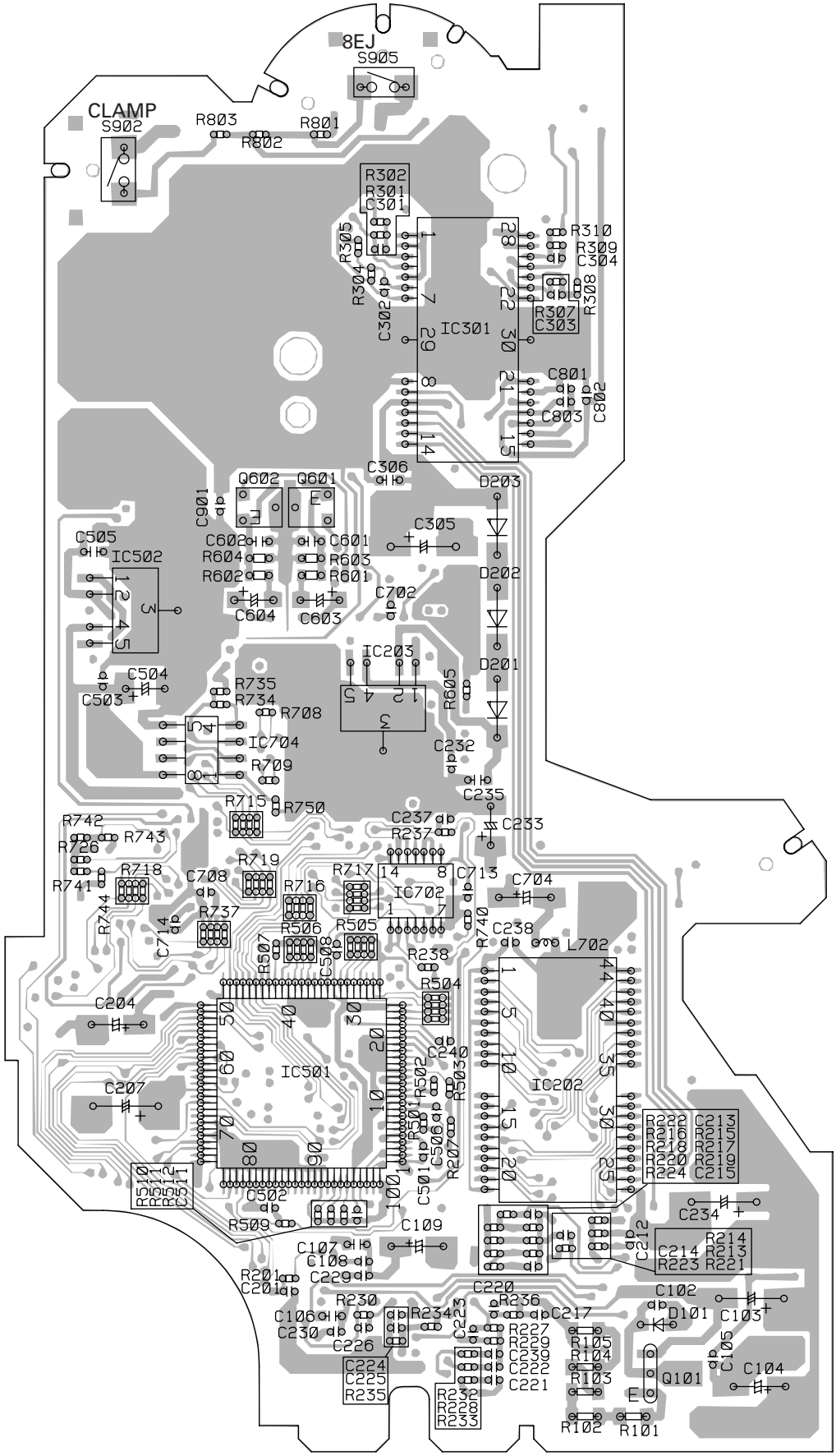

IC, Q

A

IC301

B

Q602
Q601

IC502

IC203

IC704

IC702

C

IC501
IC202

D

Q101

4.5 SWITCH PCB

E SWITCH PCB

SIDE A

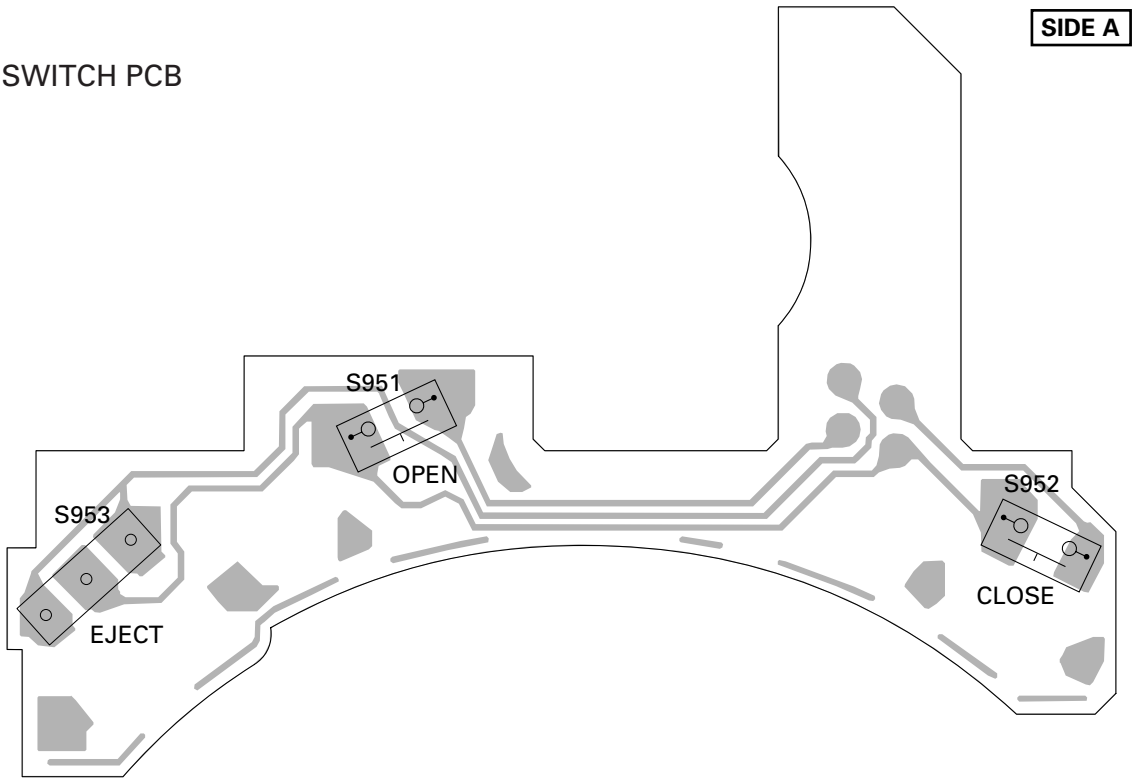

E SWITCH PCB

SIDE B

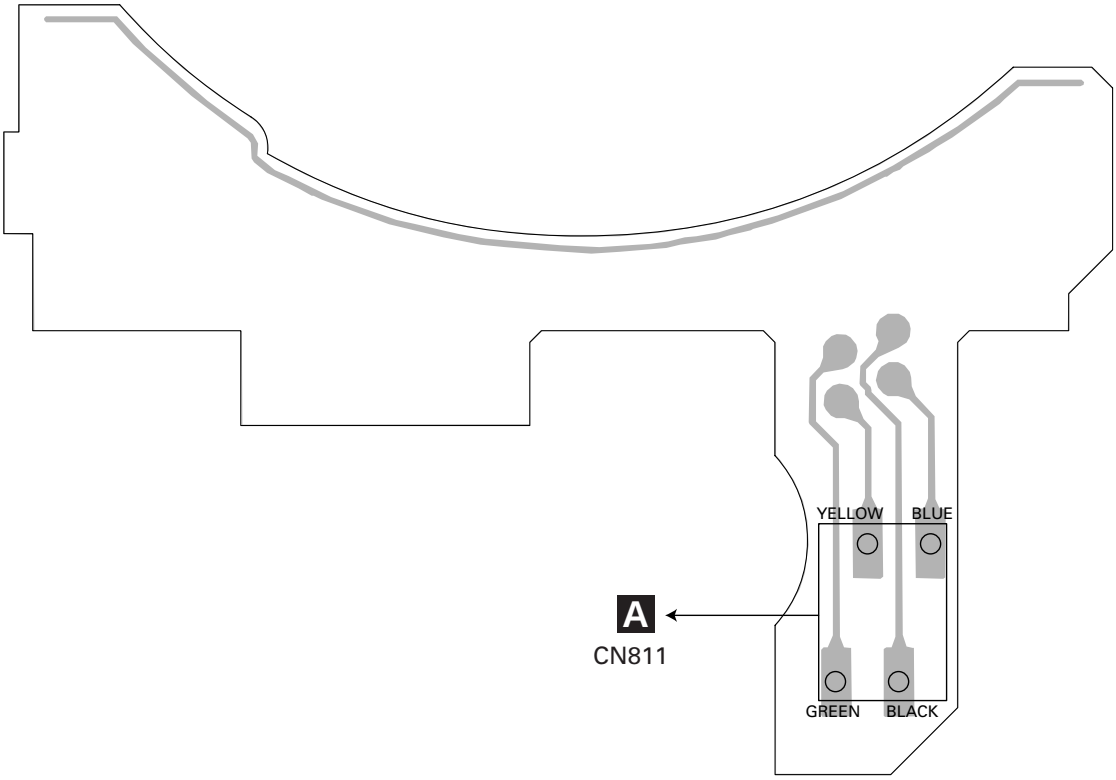

4.6 CONNECTOR PCB

F CONNECTOR PCB SIDE A

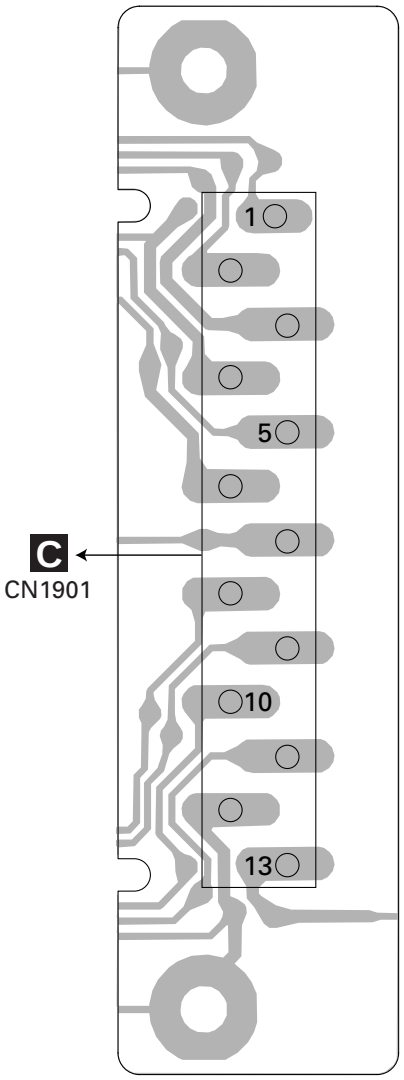

F CONNECTOR PCB SIDE B

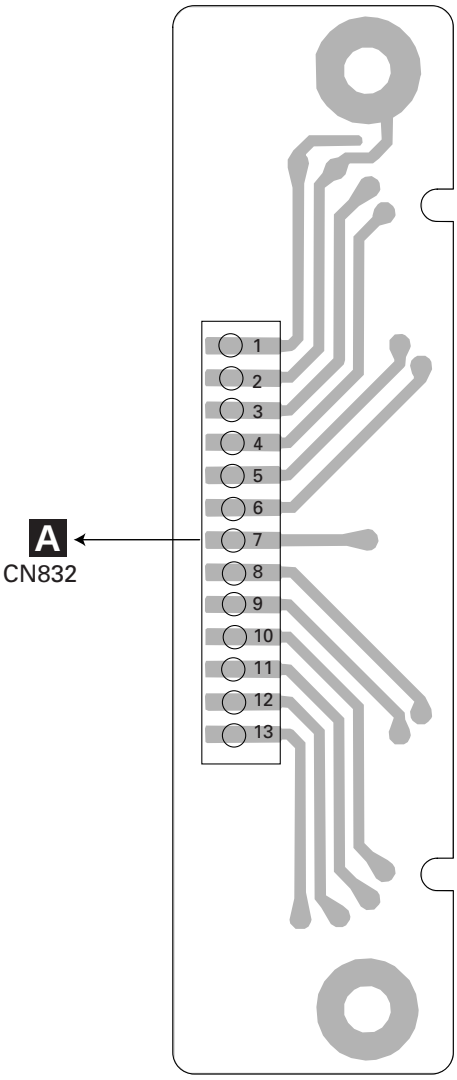

5. ELECTRICAL PARTS LIST

NOTES:

- Parts whose parts numbers are omitted are subject to being not supplied.
- The part numbers shown below indicate chip components.

Chip Resistor

RS1/○S○○○J,RS1/○○S○○○J

Chip Capacitor (except for CQS.....)

CKS....., CCS....., CSZS.....

A Unit Number : CWM8042(DEH-P840MP/XN/UC)
: CWM8043(DEH-P8400MP/XN/UC)
: CWM8044(DEH-P8450MP/XN/ES)

Unit Name : Tuner Amp Unit

MISCELLANEOUS

=====Circuit Symbol and No.===Part Name			Part No.
IC	102	IC	HA12187FP
IC	131	IC	PML009A
IC	251	IC	BA3834F
IC	301	IC	PAL007A
IC	571	IC	PA2028A
IC	601	IC (DEH-P840MP, P8400MP)	PD5741A
IC	601	IC (DEH-P8450MP)	PD5740A
IC	651	IC	S-80735ANDZI
IC	811	IC	BA6288FS
IC	871	IC	NJM2360M
Q	101	Transistor	2SA1037K
Q	102	Transistor	DTC124EK
Q	251	Transistor	2SA1037K
Q	252	Transistor	DTC144EK
Q	253	Transistor	2SC2412K
Q	301	Transistor	DTC124EK
Q	351	Transistor	IMH3A
Q	352	Transistor	IMH3A
Q	353	Transistor	IMH3A
Q	401	Transistor	2SC2412K
Q	501	Transistor	2SC2412K
Q	503	Transistor	IMD2A
Q	651	Transistor	2SC2412K
Q	751	Transistor	IMD2A
Q	752	Transistor	2SD2396
Q	811	Transistor	2SD1760F5
Q	812	Transistor	IMD3A
Q	831	Transistor	2SB808
Q	832	Transistor	DTC114EK
Q	833	Transistor	2SA1037K
Q	834	Transistor	DTC114EK
Q	835	Transistor	DTC114EK
Q	836	Transistor	2SC2412K
Q	837	Transistor	IMD2A
Q	871	Transistor	2SD1760F5
Q	872	Transistor	IMD2A
Q	901	Transistor	2SD1760F5
Q	902	Transistor	IMD2A
Q	911	Transistor	2SD1760F5
Q	912	Transistor	IMD2A
Q	921	Transistor	2SD2396
Q	922	Transistor	2SB1238
Q	923	Transistor	DTC114EK
Q	931	Transistor	IMX1
Q	941	Transistor	DTC114EK
Q	951	Transistor	2SA1037K
Q	961	Transistor	2SC2412K
Q	962	Transistor	2SD1767
Q	963	Transistor	IMD2A
Q	971	Transistor	2SB808
Q	972	Transistor	DTC114EK
D	231	Diode	RB706F-40
D	301	Diode	1SR139-400
D	501	Diode	DAN202U
D	502	Diode	HZS9L(A2)
D	503	Diode	1SS133
D	751	Diode	HZS9L(B1)
D	811	Diode	HZS7L(B2)
D	812	Diode	1SS133
D	813	Diode	1SS133
D	833	Diode	DAN202U
D	834	Diode	DAP202U
D	835	Diode	DAN202U
D	836	Diode	DAP202U
D	837	Diode	DAN202U
D	838	Diode	DAP202U
D	839	Diode Network	DA204U
D	841	Diode	HZS6L(A2)
D	842	Diode	HZS9L(A1)
D	871	Diode	RB411D
D	872	Diode	HZS11L(A1)
D	901	Diode	HZS6L(B1)
D	902	Diode	1SR139-400
D	911	Diode	HZS6L(B2)
D	921	Diode	HZS9L(B3)
D	931	Diode	HZS7L(C3)
D	932	Diode	HZS7L(A1)
D	941	Diode	1SR139-400
D	951	Diode	DAN202U
D	964	Diode	HZS11L(A1)
D	981	Diode	1SR139-400
D	982	Diode	1SR139-400
D	983	Diode	1SR139-400
ZNR	401	Surge Protector	DSP-201M-A21F
L	105	Ferri-Inductor	LAU2R2K
L	401	Inductor	LCTB4R7K2125
L	402	Inductor	LAU1R0K
L	403	Inductor	LAU100K
L	572	Ferri-Inductor	LAU101K
L	601	Inductor	LAU100K
L	701	Inductor	LAU100K
L	831	Inductor	LAU100K
L	872	Inductor	CTF1510
L	951	Inductor	CTF1530
L	971	Inductor	LAU100K

=====Circuit Symbol and No.===Part Name			Part No.
X	601	Radiator 10.00MHz	CSS1475
IL	961	Lamp 14V 40mA	CEL1593
VR	231	Semi-fixed 10kΩ(B)	CCP1229
MIC	231	Microphone	CPM1011
		FM/AM Tuner Unit	CWE1563
SP	601	Buzzer	CPV1050

RESISTORS

R	101		RS1/16S181J
R	102		RS1/16S181J
R	103		RS1/16S223J
R	104		RS1/16S223J
R	105		RS1/16S102J
R	106		RS1/16S102J
R	113		RS1/16S150J
R	114		RS1/16S470J
R	115		RS1/16S101J
R	116		RS1/16S101J
R	117		RS1/16S222J
R	118		RS1/16S103J
R	119		RS1/16S332J
R	120		RS1/16S562J
R	131		RS1/16S102J
R	132		RS1/16S102J
R	133		RS1/16S102J
R	134		RS1/16S102J
R	139		RS1/16S101J
R	140		RS1/16S101J
R	141		RS1/16S101J
R	142		RS1/16S101J
R	143		RS1/16S101J
R	144		RS1/16S101J
R	145		RAB4C102J
R	231		RS1/16S222J
R	233		RS1/16S560J
R	234		RS1/16S104J
R	235		RS1/16S104J
R	251		RS1/16S102J
R	252		RS1/16S104J
R	253		RS1/16S473J
R	254		RAB4C102J
R	255		RS1/16S224J
R	256		RS1/16S224J
R	257		RS1/16S104J
R	258		RS1/16S102J
R	259		RS1/16S103J
R	260		RS1/16S103J
R	261		RS1/16S223J
R	262		RS1/16S822J
R	301		RS1/16S103J
R	302		RS1/16S103J
R	303		RS1/16S103J
R	304		RS1/16S331J
R	351		RS1/16S820J
R	352		RS1/16S820J
R	353		RS1/16S820J
R	354		RS1/16S820J
R	355		RS1/16S820J
R	356		RS1/16S820J
R	357		RS1/16S223J
R	358		RS1/16S223J
R	359		RS1/16S223J
R	360		RS1/16S223J
R	361		RS1/16S223J
R	362		RS1/16S223J
R	363		RS1/16S471J
R	364		RS1/16S471J
R	365		RS1/16S471J

=====Circuit Symbol and No.===Part Name			Part No.
R	366		RS1/16S471J
R	367		RS1/16S471J
R	368		RS1/16S471J
R	369		RS1/16S0R0J
R	370		RS1/16S0R0J
R	371		RS1/16S0R0J
R	372		RS1/16S0R0J
R	373		RS1/16S0R0J
R	374		RS1/16S0R0J
R	401		RS1/16S272J
R	402		RS1/16S272J
R	403		RS1/16S162J
R	404		RS1/16S162J
R	405		RS1/16S0R0J
R	406		RS1/16S0R0J
R	407		RS1/16S473J
R	408		RS1/16S473J
R	409		RS1/16S681J
R	410		RS1/16S681J
R	412		RS1/16S681J
R	413		RS1/16S103J
R	414		RS1/16S681J
R	415		RS1/16S681J
R	416		RS1/16S681J
R	417		RS1/16S393J
R	418		RS1/16S473J
R	419		RS1/16S472J
R	420		RS1/16S473J
R	421		RS1/16S473J
R	422		RS1/16S473J
R	423		RS1/16S222J
R	424		RS1/16S222J
R	501		RS1/16S103J
R	502		RS1/16S473J
R	503		RS1/16S223J
R	504		RS1/16S223J
R	505		RS1/16S102J
R	571		RS1/16S103J
R	572		RS1/16S103J
R	601		RS1/16S472J
R	607		RS1/16S682J
R	608		RS1/16S102J
R	609		RS1/16S0R0J
R	611		RS1/16S104J
R	612		RS1/16S0R0J
R	613		RS1/16S104J
R	614		RS1/16S104J
R	615		RS1/16S104J
R	621		RS1/16S0R0J
R	625		RS1/16S473J
R	626	(DEH-P8400MP)	RS1/16S104J
R	627		RS1/16S104J
R	628	(DEH-P840MP, P8450MP)	RS1/16S104J
R	629		RS1/16S104J
R	630		RS1/16S102J
R	651		RS1/16S102J
R	652		RS1/16S102J
R	653		RS1/16S222J
R	654		RS1/16S473J
R	655		RS1/16S183J
R	723		RS1/16S682J
R	724		RS1/16S221J
R	725		RS1/16S221J
R	726		RS1/16S221J
R	727		RS1/16S221J

=====Circuit Symbol and No.===Part Name			Part No.
R	728		RS1/16S221J
R	730		RS1/16S221J
R	731		RS1/16S473J
R	732		RS1/16S682J
R	733		RS1/16S682J
R	751		RD1/4PU271J
R	753		RD1/4PU221J
R	811		RS1/16S102J
R	812		RS1/16S102J
R	813		RD1/4PU391J
R	814		RAB4C102J
R	831		RS1/16S102J
R	832		RS1/16S472J
R	833		RS1/16S222J
R	834		RS1/16S222J
R	835		RS1/16S472J
R	836		RS1/16S103J
R	837		RS1/16S222J
R	838		RS1/16S222J
R	839		RS1/16S473J
R	840		RS1/16S104J
R	841		RS1/16S222J
R	842		RS1/16S222J
R	843		RS1/16S222J
R	844		RS1/16S222J
R	845		RS1/16S103J
R	846		RS1/16S104J
R	847		RS1/16S104J
R	848		RS1/16S222J
R	852		RS1/16S332J
R	872		RD1/4PU302J
R	873		RD1/4PU302J
R	874		RS1/16S0R0J
R	875		RS1/16S391J
R	876		RS1/16S121J
R	877		RS1/16S1R0J
R	878		RS1/16S331J
R	879		RS1/16S331J
R	901		RS1/16S223J
R	902		RS1/16S821J
R	903		RS1/16S821J
R	904		RS1/16S0R0J
R	913		RS1/16S681J
R	914		RS1/16S681J
R	921		RD1/4PU221J
R	922		RS1/16S122J
R	924		RD1/4PU272J
R	925		RS1/16S223J
R	931		RS1/16S104J
R	932		RS1/16S473J
R	933		RS1/16S103J
R	934		RS1/16S473J
R	935		RS1/16S472J
R	941		RS1/16S103J
R	951		RS1/16S102J
R	952		RS1/16S472J
R	953		RS1/16S472J
R	954		RS1/16S153J
R	961		RS1/16S1R0J
R	962		RS1/16S103J
R	963		RS1/16S682J
R	964		RD1/4PU391J
R	965		RS1/16S1R0J
R	971		RS1/16S472J
R	972		RS1/16S102J
R	973		RS1/16S472J

=====Circuit Symbol and No.===Part Name			Part No.
CAPACITORS			
C	112		CKSRYB104K16
C	131		CEAL1R0M50
C	132		CEAL1R0M50
C	133		CEALR22M50
C	134		CEALR22M50
C	135		CEAL1R0M50
C	136		CEAL1R0M50
C	137		CEAL1R0M50
C	138		CEAL1R0M50
C	139		CEJQ470M10
C	140		CKSRYB104K16
C	141		CEALNP4R7M16
C	142		CEALNP4R7M16
C	145		CEALNP4R7M16
C	146		CEALNP4R7M16
C	147		CEALNP4R7M16
C	148		CEALNP4R7M16
C	149		CEALNP4R7M16
C	150		CEALNP4R7M16
C	157		CEAL100M16
C	159		CCSQCH152J50
C	160		CCSQCH152J50
C	161		CCSQCH152J50
C	162		CCSQCH152J50
C	231		CEJQ100M16
C	232		CEJQ220M25
C	233		CEAL100M16
C	234		CKSRYB474K10
C	235		CKSRYB474K10
C	251		CKSRYB104K16
C	252		CKSRYB104K16
C	253		CKSRYB103K50
C	254		CEJQ1R0M50
C	255		CKSRYB104K16
C	256		CKSRYB104K16
C	257		CKSRYB224K10
C	258		CKSRYB104K16
C	301		CKSRYB474K10
C	302		CKSRYB474K10
C	303		CKSRYB474K10
C	304		CKSRYB474K10
C	305		CKSRYB474K10
C	306		CKSRYB474K10
C	307		CKSRYB474K10
C	308		CKSRYB474K10
C	309		CEHAR330M10
C	310	3300μF/16V	CCH1433
C	311		CKSRYB104K16
C	312		CEHAR100M16
C	313		CKSQYB225K10
C	314		CKSQYB225K10
C	351		CEAL100M16
C	352		CEAL100M16
C	353		CEAL100M16
C	354		CEAL100M16
C	355		CEAL100M16
C	356		CEAL100M16
C	357		CKSRYB222K50
C	358		CKSRYB222K50
C	359		CKSRYB222K50
C	360		CKSRYB222K50
C	361		CKSRYB222K50
C	362		CKSRYB222K50
C	401		CKSRYB183K50
C	402		CKSRYB183K50

=====Circuit Symbol and No.===Part Name			Part No.
C	408		CKSRYB473K50
C	409		CKSRYB103K50
C	411		CEJQ101M10
C	413		CKSRYB223K50
C	414		CKSRYB472K50
C	415		CKSRYB223K50
C	416		CEJQ220M10
C	501		CEJQ220M16
C	571		CKSRYB105K10
C	572		CKSRYB105K10
C	573		CKSRYB105K10
C	574		CKSRYB105K10
C	575		CKSRYB105K10
C	576		CKSRYB105K10
C	580		CEAL4R7M35
C	582		CEJQ101M16
C	583		CASAQ3R3M16
C	585		CKSYB684K25
C	586		CEAL100M16
C	587		CKSQYB225K10
C	588		CEJQ330M25
C	589		CEJQ330M25
C	601		CEAL4R7M35
C	602		CKSRYB103K50
C	603		CCSRCH180J50
C	604		CCSRCH101J50
C	605		CCSRCH220J50
C	652		CKSRYB104K16
C	653		CKSRYB105K10
C	702	470µF/16V	CCH1331
C	751		CKSRYB102K50
C	752		CEJQ101M16
C	753		CKSRYB473K50
C	811		CCSRCH101J50
C	812		CEJQ220M10
C	813		CKSRYB104K16
C	814		CKSRYB102K50
C	815		CKSRYB102K50
C	816		CCSRCH101J50
C	833		CKSRYB104K16
C	837		CKSRYB103K50
C	872	4.7µF	CCG1111
C	873		CEJQ100M50
C	874		CEJQ330M25
C	875		CKSRYB103K50
C	876		CCSRCH331J50
C	877		CEJQ470M16
C	878		CKSRYB104K16
C	879		CKSRYB104K16
C	880		CEJQ101M10
C	901		CEJQ470M10
C	902		CKSRYB103K50
C	903		CKSRYB472K50
C	904	470µF/16V	CCH1331
C	905	470µF/16V	CCH1331
C	911		CEJQ470M10
C	912		CKSRYB472K50
C	921		CEJQ221M10
C	922		CKSRYB103K50
C	923		CEJQ101M16
C	931		CKSRYB104K25
C	941		CKSRYB105K10
C	970		CKSRYB473K50
C	972		CCSRCH101J50

B Unit Number : CWM8051(DEH-P840MP/XN/UC)
: CWM8052(DEH-P8400MP/XN/UC)
(DEH-P8450MP/XN/ES)

Unit Name : Keyboard Unit(OEL)

MISCELLANEOUS

=====Circuit Symbol and No.===Part Name			Part No.
IC	1801	IC	PD5745A
IC	1802	IC (DEH-P840MP)	PD8091A
IC	1802	IC (DEH-P8400MP, P8450MP)	PD8092A
IC	1805	IC	S-818A33AUC-BGN
IC	1806	IC	TC7SET08FU
Q	1806	Transistor	2SC4617
Q	1807	Transistor	2SD1664
D	1803	Diode	1SS355
D	1804	Diode	DAN202U
D	1805	Diode	DAP202U
L	1801	Inductor	CTF1530
L	1803	Inductor	CTF1530
TH	1901	Thermistor	CCX1037
X	1801	Radiator 10.0MHz	CSS1577
S	1801	Switch	CSG1107
S	1802	Switch	CSG1107
S	1803	Switch	CSG1107
S	1804	Switch	CSG1107
VR	1801	Semi-fixed 15kΩ(B)	CCP1230
		OEL Unit	MXS8018

RESISTORS

=====Circuit Symbol and No.===Part Name			Part No.
R	1805		RS1/16S0R0J
R	1807		RS1/16S222J
R	1808		RS1/16S222J
R	1809		RS1/16S820J
R	1815		RS1/16S222J
R	1816		RS1/16S0R0J
R	1817		RS1/16S154J
R	1818		RS1/16S473J
R	1819		RS1/16S473J
R	1820		RAB4C102J
R	1821		RS1/16S473J
R	1822		RS1/16S333J
R	1823		RS1/16S222J
R	1824		RS1/16S682J
R	1825		RS1/16S393J
R	1826		RS1/16S0R0J
R	1827		RS1/16S683J
R	1828		RS1/16S0R0J
R	1830		RS1/16S392J
R	1831		RAB4C101J
R	1832		RS1/16S473J
R	1833		RS1/16S473J
R	1834		RS1/16S102J
R	1835		RS1/16S102J
R	1836		RS1/16S101J
R	1837		RAB4C101J
R	1838		RS1/16S101J
R	1839		RAB4C101J
R	1840		RAB4C101J
R	1841		RAB4C101J
R	1842		RAB4C101J
R	1843		RAB4C101J
R	1844		RAB4C101J
R	1845		RAB4C101J
R	1846		RAB4C101J
R	1847		RS1/16S682J
R	1848		RS1/16S473J

=====Circuit Symbol and No.===Part Name			Part No.
CAPACITORS			
C	1805		CKSRYB102K50
C	1806		CSZSR4R7M10
C	1807		CSZSR4R7M10
C	1808		CKSRYB103K50
C	1809		CKSRYB104K25
C	1811		CKSRYB473K50
C	1812		CKSRYB103K50
C	1813		CSZSR4R7M10
C	1814		CKSRYB104K16
C	1815		CKSRYB104K25
C	1816		CKSRYB104K25
C	1817		CKSRYB104K25
C	1819		CKSRYB104K16
C	1820		CKSRYB103K50
C	1821		CKSRYB103K50

C Unit Number : CWM8056
Unit Name : Keyboard Unit(LCD)

MISCELLANEOUS			
IC	1901	IC	RS-140
IC	1902	IC	PD6340A
D	1903	LED	NSSW440-9159
D	1905	LED	CL190UBX
D	1906	LED	CL190UBX
D	1907	LED	CL190UBX
D	1908	LED	CL190UBX
D	1909	LED	CL190UBX
D	1910	LED	CL190UBX
D	1911	LED	CL190UBX
L	1902	Inductor	CTF1530
X	1901	Ceramic Resonator 4.97MHz	CSS1422
S	1901	Switch	CSG1110
S	1902	Encoder	CSD1042
S	1903	Switch	CSG1110
S	1904	Push Switch	CSG1111
S	1905	Push Switch	CSG1111
S	1906	Push Switch	CSG1111
S	1907	Push Switch	CSG1111
S	1908	Switch	CSG1107
S	1909	Switch	CSG1107
S	1910	Switch	CSG1107
S	1911	Push Switch	CSG1112
S	1912	Switch	CSG1107
S	1913	Switch	CSG1107
S	1914	Switch	CSG1107
S	1915	Switch	CSG1107
S	1916	Switch	CSG1107
S	1917	Switch	CSG1107
S	1918	Push Switch	CSG1112
S	1919	Push Switch	CSG1112
LCD	1901	LCD	CAW1704
RESISTORS			
R	1901		RS1/16S222J
R	1902		RS1/16S222J
R	1903		RS1/16S104J
R	1904		RS1/16S103J
R	1905		RS1/16S121J
R	1906		RS1/16S2R2J
R	1907		RS1/16S101J
R	1908		RS1/16S101J
R	1910		RS1/16S0R0J
R	1918		RS1/16S560J
R	1920		RS1/16S560J
R	1922		RS1/16S560J
R	1924		RS1/16S271J
R	1926		RS1/16S271J
R	1928		RS1/16S331J
R	1929		RS1/16S331J
R	1930		RS1/16S271J
CAPACITORS			
C	1901		CKSRYB104K25
C	1903		CSZSR4R7M10
C	1904		CKSRYB104K16
C	1905		CCSRCH101J50
C	1908		CKSRYB104K16
C	1909		CKSRYB104K16
C	1910		CKSRYB104K16
C	1911		CKSRYB104K16
C	1912		CKSRYB104K16
C	1913		CKSRYB104K16
C	1914		CKSRYB104K16

E Unit Number :
Unit Name : Switch PCB

MISCELLANEOUS			
S	951	Switch(OPEN)	CSN1051
S	952	Spring Switch(CLOSE)	CSN1052
S	953	Switch(EJECT)	CSN1058

D Unit Number : CWX2618
Unit Name : CD Core Unit(S9MP3)

MISCELLANEOUS			
IC	201	IC	UPD63760GJ
IC	202	IC	MSM51V4265EP-70TS
IC	203	IC	BA033SFP
IC	301	IC	BA5996FM
IC	501	IC	UPD61002GC
IC	502	IC	BA25BC0WFP
IC	701	IC	PE5269A
IC	702	IC	TC74VHCT08AFT
IC	703	IC	S-818A33AUC-BGN
IC	704	IC	PD9023A
Q	101	Transistor	2SB1132
Q	601	Transistor	DTC323TK
Q	602	Transistor	DTC323TK
Q	603	Transistor	2SB709A
Q	701	Transistor	UN2111
D	101	Diode	1SS355
D	201	Diode	1SR154-400
D	202	Diode	1SR154-400
D	203	Diode	1SR154-400
D	501	Diode	1SR154-400
D	502	Diode	1SR154-400
D	503	Diode	1SR154-400
D	504	Diode	1SR154-400
D	601	Chip Diode	MA151WA
L	201	Inductor	CTF1546
L	202	Inductor	CTF1546
L	204	Inductor	CTF1546
L	701	Inductor	CTF1546
L	702	Inductor	LCYBR22J1608
TH	701	Thermistor	CCX1037
X	201	Ceramic Resonator 16.93MHz	CSS1569
X	202	Ceramic Resonator 24.57MHz	CSS1570
X	701	Ceramic Resonator 16.00MHz	CSS1576
S	901	Spring Switch (HOME)	CSN1051
S	902	Spring Switch (CLAMP)	CSN1052

=====Circuit Symbol and No.===Part Name			Part No.
S	903	Spring Switch (DSCSNS)	CSN1051
S	904	Spring Switch (12EJ)	CSN1052
S	905	Spring Switch (8EJ)	CSN1051

RESISTORS

R	101	RS1/10S1R5J
R	102	RS1/10S1R5J
R	103	RS1/10S1R5J
R	104	RS1/10S1R5J
R	105	RS1/10S1R5J
R	201	RS1/16SS102J
R	202	RS1/16SS333J
R	203	RS1/16SS333J
R	204	RS1/16SS333J
R	206	RS1/16SS0R0J
R	208	RS1/16SS0R0J
R	210	RS1/16SS0R0J
R	212	RS1/16SS221J
R	213	RS1/16SS1002D
R	214	RS1/16SS1002D
R	215	RS1/16SS1002D
R	216	RS1/16SS1002D
R	217	RS1/16SS1002D
R	218	RS1/16SS1002D
R	219	RS1/16SS1002D
R	220	RS1/16SS1002D
R	221	RS1/16SS103J
R	222	RS1/16SS103J
R	223	RS1/16SS103J
R	224	RS1/16SS103J
R	225	RS1/16SS103J
R	226	RS1/16SS393J
R	227	RS1/16SS103J
R	228	RS1/16SS182J
R	229	RS1/16SS103J
R	233	RS1/16SS183J
R	237	RS1/16SS104J
R	238	RS1/16SS473J
R	301	RS1/16SS183J
R	302	RS1/16SS822J
R	303	RS1/16SS0R0J
R	304	RS1/16SS183J
R	305	RS1/16SS822J
R	306	RS1/16SS0R0J
R	307	RS1/16SS183J
R	308	RS1/16SS822J
R	309	RS1/16SS183J
R	310	RS1/16SS822J
R	311	RS1/16SS0R0J
R	501	RS1/16SS221J
R	502	RS1/16SS221J
R	503	RS1/16SS221J
R	504	RAB4CQ223J
R	505	RAB4CQ223J
R	506	RAB4CQ223J
R	507	RS1/16SS223J
R	508	RS1/16SS223J
R	509	RS1/16SS102J
R	510	RS1/16SS223J
R	511	RS1/16SS223J
R	512	RS1/16SS223J
R	601	RS1/16S101J
R	602	RS1/16S101J
R	603	RS1/16S223J
R	604	RS1/16S223J
R	605	RS1/16SS103J
R	701	RS1/16SS0R0J
R	707	RS1/16SS0R0J
R	708	RS1/16SS102J
R	709	RS1/16SS102J
R	710	RS1/16SS102J
R	711	RS1/16SS102J
R	712	RS1/16SS102J
R	713	RS1/16SS102J
R	714	RS1/16SS473J
R	715	RAB4CQ221J
R	716	RAB4CQ221J
R	717	RAB4CQ221J
R	718	RAB4CQ221J
R	719	RAB4CQ221J
R	720	RS1/16SS471J
R	721	RS1/16SS471J
R	722	RAB4CQ221J
R	723	RS1/16SS102J
R	724	RN1/16SE1302D
R	725	RS1/16SS222J
R	726	RS1/16SS103J
R	727	RS1/16SS473J
R	728	RS1/16SS473J
R	729	RS1/16SS223J
R	730	RS1/16SS473J
R	731	RS1/16SS104J
R	732	RS1/16SS104J
R	733	RS1/16SS104J
R	734	RS1/16SS472J
R	735	RS1/16SS473J
R	737	RAB4CQ473J
R	739	RAB4CQ473J
R	740	RS1/16SS473J
R	741	RS1/16SS104J
R	742	RS1/16SS104J
R	745	RS1/16SS473J
R	746	RS1/16SS104J
R	747	RS1/16SS104J
R	748	RS1/16SS104J
R	750	RS1/16SS473J
R	801	RS1/16SS104J
R	802	RS1/16SS473J
R	803	RS1/16SS273J
R	901	RS1/16SS221J
R	902	RS1/16SS221J
R	903	RS1/16SS221J
R	904	RS1/16SS221J
R	905	RS1/16SS221J
R	906	RS1/16SS221J

CAPACITORS

C	101	CKSSYB104K10
C	102	CKSSYB104K10
C	103	CEV101M16
C	104	CEV101M4
C	105	CKSSYB104K10
C	106	CKSRYB102K50
C	108	CKSSYB104K10
C	109	CEV100M16
C	201	CKSSYB471K50
C	202	CKSSYB104K10
C	203	CKSSYB104K10
C	204	CEV220M6R3
C	205	CKSSYB103K16
C	206	CKSSYB103K16
C	207	CEV221M4

=====Circuit Symbol and No.===Part Name			Part No.
C	208		CKSSYB104K10
C	209		CKSSYB104K10
C	210		CKSSYB104K10
C	211		CKSSYB104K10
C	216		CKSSYB332K50
C	217		CKSSYB104K10
C	218		CKSSYB223K16
C	219		CKSSYB104K10
C	220		CKSSYB103K16
C	221		CKSSYB104K10
C	222		CCSSCH270J50
C	223		CCSSCJ3R0C50
C	224		CKSSYB104K10
C	225		CKSSYB103K16
C	226		CCSSCH680J50
C	227		CCSSCH470J50
C	228		CKSSYB682K25
C	230		CKSSYB104K10
C	232		CKSSYB104K10
C	233	47μF/6.3V	CCH1436
C	234		CEV221M4
C	235		CKSRYB224K16
C	237		CKSSYB104K10
C	238		CKSSYB104K10
C	240		CCSSCH100D50
C	301		CKSSYB331K50
C	302		CKSSYB331K50
C	303		CKSSYB472K25
C	304		CKSSYB472K25
C	305		CEV101M16
C	306		CKSRYB224K16
C	501		CKSSYB104K10
C	502		CKSSYB471K50
C	503		CKSSYB104K10
C	504	47μF/6.3V	CCH1436
C	505		CKSRYB224K16
C	506		CKSSYB104K10
C	508		CKSSYB104K10
C	509		CKSSYB104K10
C	510		CKSSYB104K10
C	511		CKSSYB104K10
C	601		CCSRCH102J50
C	602		CCSRCH102J50
C	603		CSZS4R7M10
C	604		CSZS4R7M10
C	701		CKSSYB104K10
C	702		CKSSYB471K50
C	703		CKSSYB103K16
C	704		CEV1R0M50
C	705		CKSSYB104K10
C	706		CKSSYB471K50
C	707		CKSSYB104K10
C	708		CKSSYB104K10
C	709		CKSSYB103K16
C	710		CKSSYB104K10
C	711	10μF/10V	CCH1349
C	712		CKSRYB224K16
C	713		CKSSYB104K10
C	714		CKSSYB104K10
C	715		CKSSYB103K16
C	716		CKSSYB103K16
C	901		CKSSYB104K10
C	903		CCSRCH101J50

Miscellaneous Parts List

=====Circuit Symbol and No.===Part Name			Part No.
		Pickup Unit(Service)(P9MP3)	CXX1550
M	1	Motor Unit(SPINDLE)	CXB6007
M	2	Motor Unit(LOADING/CARRIAGE)	CXB5903
M	951	Motor Unit(AUTOMATIC FLAP)	CXB8939

6. ADJUSTMENT

6.1 JIG CONNECTION DIAGRAM

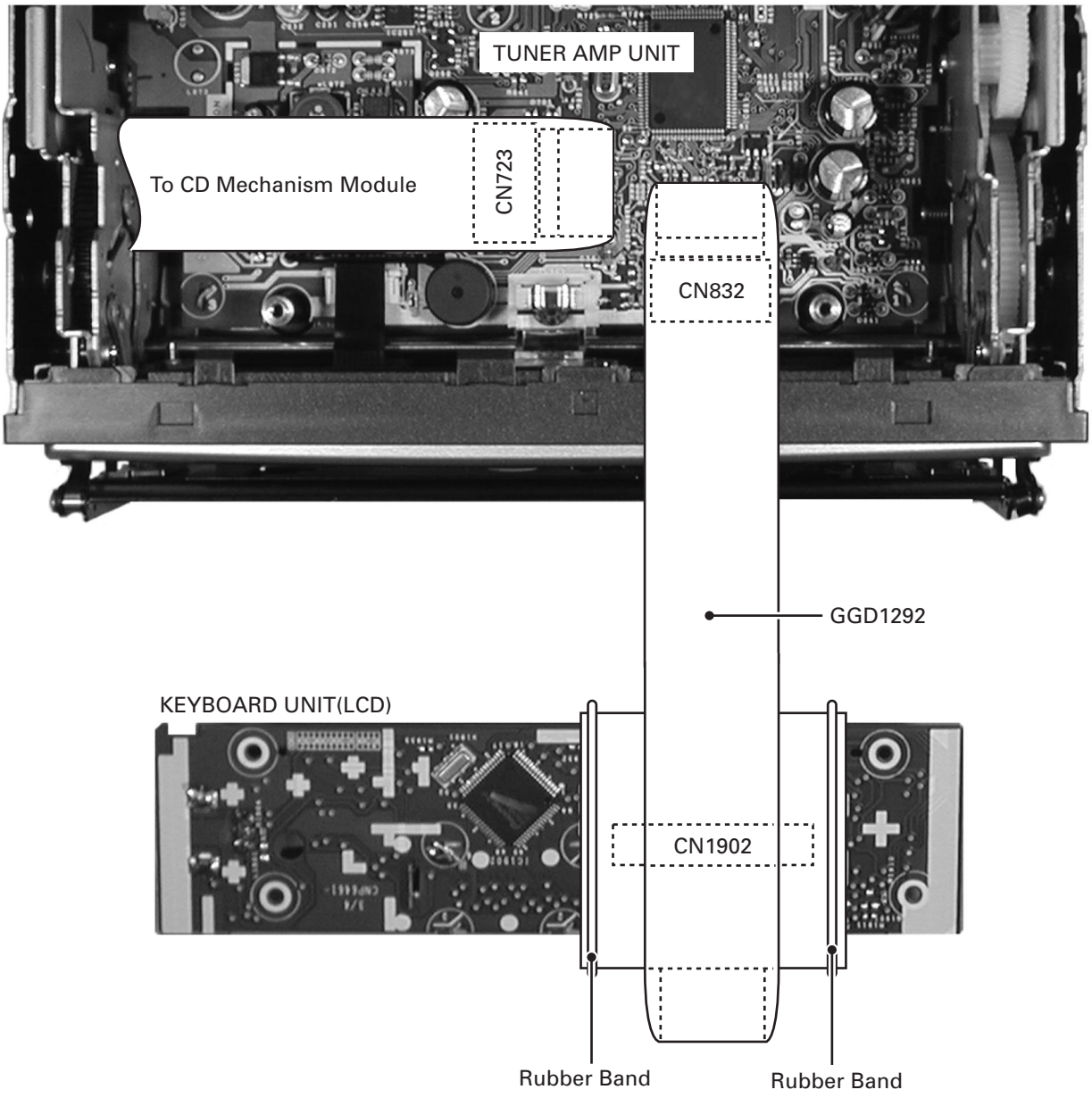

6.2 OEL UNIT ADJUSTMENT

● **Adjustment point**

KEYBOARD UNIT(OEL) (SIDE B)

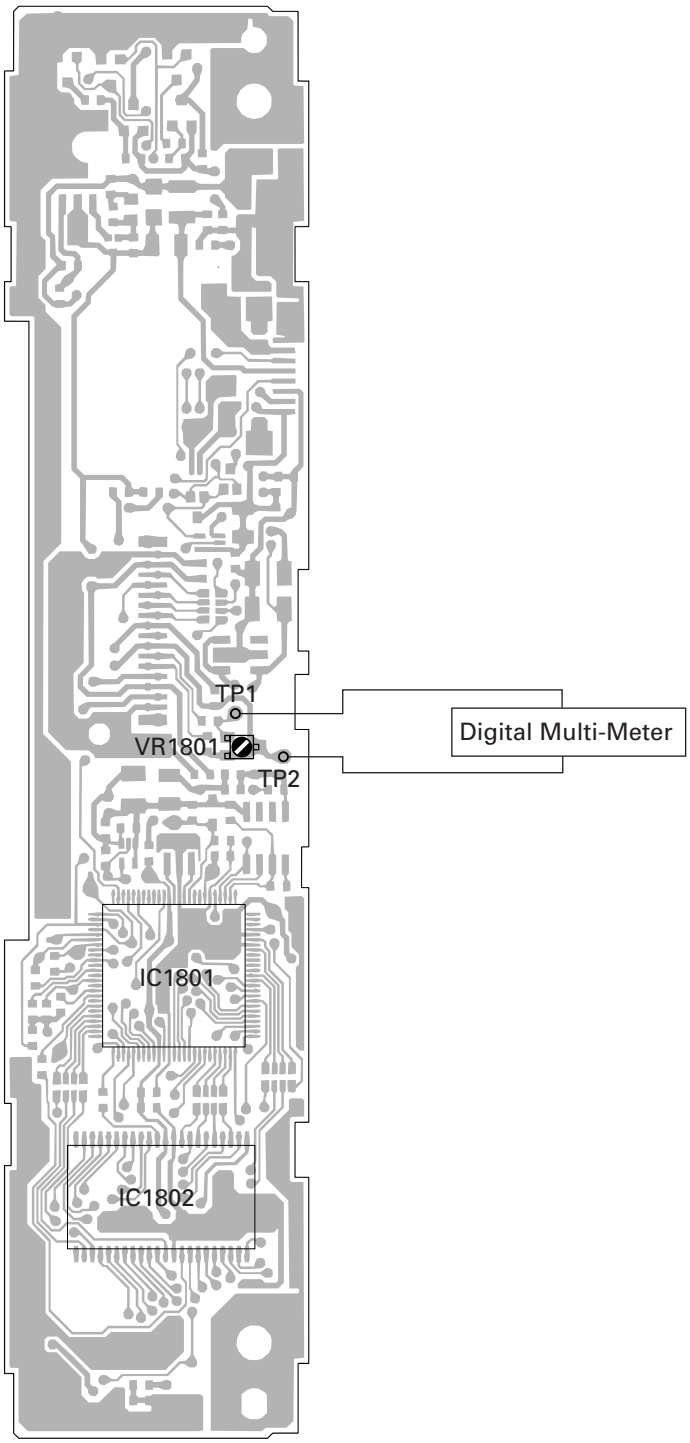

<When the OEL Unit has been replaced>

1. Use VR1801 to adjust the resistance between TP1 and TP2 to 6.1kΩ.

6.3 CD ADJUSTMENT

1) Precautions

- This unit uses a single power supply (+3.3V) for the regulator. The signal reference potential, therefore, is connected to REFO1(approx. 1.65V) instead of GND.
  If REFO1 and GND are connected to each other by mistake during adjustments, not only will it be impossible to measure the potential correctly, but the servo will malfunction and a severe shock will be applied to the pick-up. To avoid this, take special note of the following.
  Do not connect the negative probe of the measuring equipment to REFO1 and GND together. It is especially important not to connect the channel 1 negative probe of the oscilloscope to REFO1 with the channel 2 negative probe connected to GND.
  Since the frame of the measuring instrument is usually at the same potential as the negative probe, change the frame of the measuring instrument to floating status.
  If by accident REFO1 comes in contact with GND, immediately switch the regulator or power OFF.

- Always make sure the regulator is OFF when connecting and disconnecting the various filters and wiring required for measurements.

- Before proceeding to further adjustments and measurements after switching regulator ON, let the player run for about one minute to allow the circuits to stabilize.

- Since the protective systems in the unit's software are rendered inoperative in test mode, be very careful to avoid mechanical and /or electrical shocks to the system when making adjustment.

- The RFI and RFO signals are easy to oscillate because of a wide band. When observing them, insert a resistor of about 1 kΩ to the series.

- This equipment will not guarantee the load ejection operation when the mechanical unit is turned upside down. In particular, if the ejection operation is incorrectly performed and recovery is disabled, the recovery is enabled by resetting a product or turning ACC off to on.

2) Test Mode

This mode is used for adjusting the CD mechanism module of the device.

- Test mode starting procedure
  Reset while pressing the **4** and **6** keys together.

- Test mode cancellation
  Switch ACC, back-up OFF.

- After pressing the EJECT key, do not press any other key until the disk is completely ejected.

- If the ► or ◄ key is pressed while focus search is in progress, immediately turn the power off (otherwise the actuator may be damaged due to adhesion of the lenses).

- Jump operation of TRs other than 100TR continues after releasing the key. CRG move and 100TR jump operations are brought into the “Tracking close” status when the key is released.

- Powering Off/On resets the jump mode to “Single TR(91)”, the RF AMP gain setting to 0 dB, and the automatic adjustment value to the initial value.

● Flow Chart

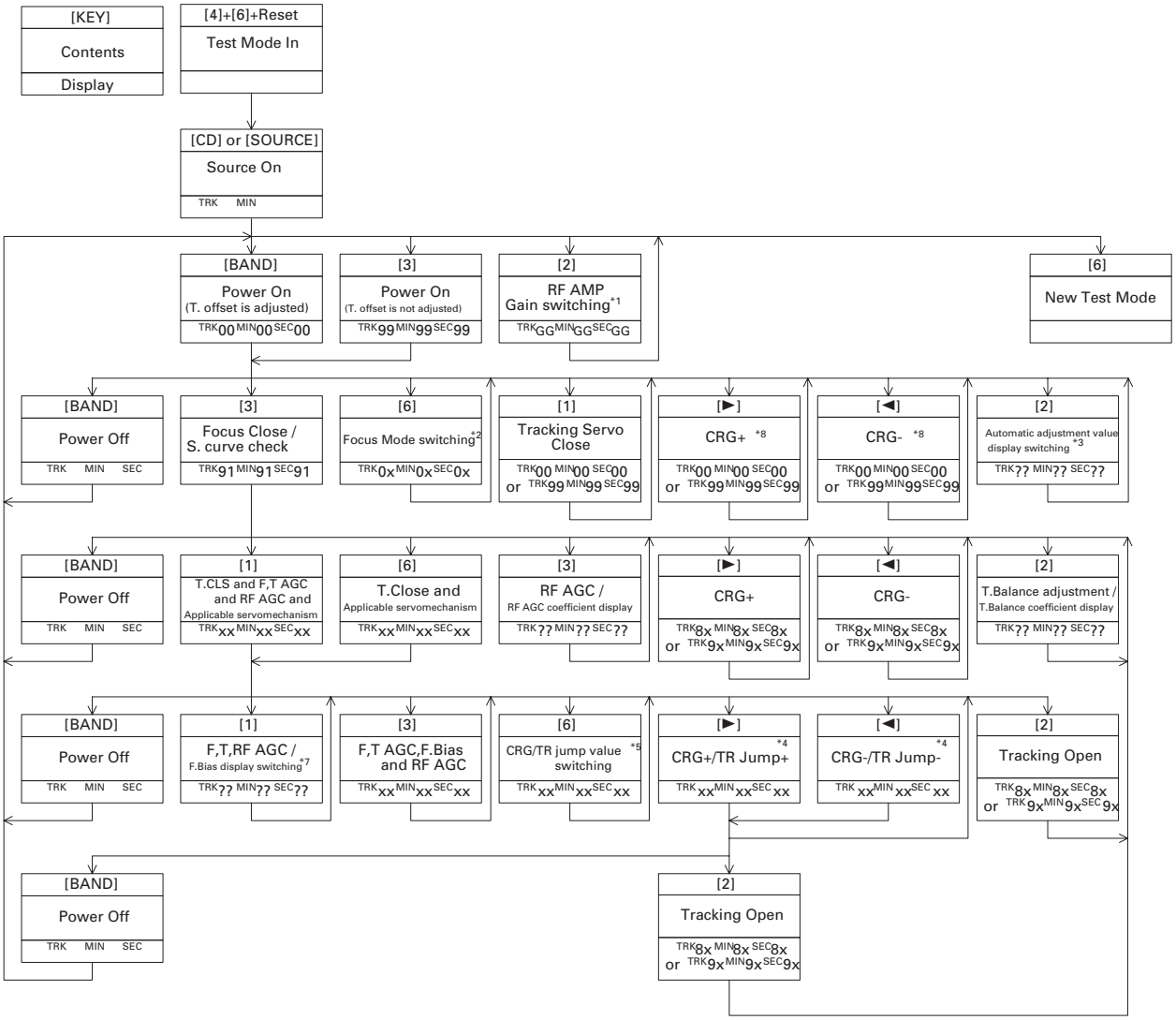

*1) TYP (TRK MIN SEC) → +12dB (TRK12MIN12SEC12)

*2) Focus Close setting (TRK00MIN00SEC00 or TRK99MIN99SEC99) → S. curve check setting (TRK01MIN01SEC01) → F. EQ measurement setting (TRK02MIN02SEC02)

*3) F.Offset Display → T.Offset Display → Switch to the order of the original display

*4) 1TR/32TR/100TR

*5 Single TR (TRK91MIN91SEC91 or TRK81MIN81SEC81) → 32TR (TRK92MIN92SEC92 or TRK82MIN82SEC82) → 100TR (TRK93MIN93SEC93 or TRK83MIN83SEC83) → CRG Move (TRK94MIN94SEC94 or TRK84MIN84SEC84)

*6) Only at the time of CRG move or 100TR jump

*7) TRK/MIN/SEC → F.AGC Gain → T.AGC Gain → F.Bias → RF AGC Gain

*8) CRG motor voltage = 2 [V]

[Key]	Operation	
	Test Mode	New Test Mode
[BAND]	Power On/Off	Error occurrence time/ cause display switching
[▶]	CRG +/TR Jump+ (Direction of the external surface)	TRK+/FF
[◀]	CRG -/TR Jump- (Direction of the internal surface)	TRK-/REV
[1]	T.CLS and AGC and Applicable servomechanism/ AGC,AGC display switching	SCAN
[2]	RF Gain switching/Offset adjustment display/ T.Balance adjustment/T.OPN	MODE
[3]	F.CLS,S.Curve/Rough Servo and RF AGC/ F,T,RF AGC	(ITP)
-	SPDL 1X/2X switching (Double-speed compatibility only)	-
-	Error rate measurement	-
[6]	F.Mode switching/T.CLS/CRG,TR Jump switching	Auto/Manual switching

6.4 CHECKING THE GRATING AFTER CHANGING THE PICKUP UNIT

• **Note :**
The grating angle of the PU unit cannot be adjusted after the PU unit is changed. The PU unit in the CD mechanism module is adjusted on the production line to match the CD mechanism module and is thus the best adjusted PU unit for the CD mechanism module. Changing the PU unit is thus best considered as a last resort. However, if the PU unit must be changed, the grating should be checked using the procedure below.

• **Purpose :**
To check that the grating is within an acceptable range when the PU unit is changed.

• **Symptoms of Mal-adjustment :**
If the grating is off by a large amount symptoms such as being unable to close tracking, being unable to perform track search operations, or taking a long time for track searching.

• **Method :**

• Measuring Equipment	• Oscilloscope, Two L.P.F.
• Measuring Points	• E, F, REFO1
• Disc	• ABEX TCD-782
• Mode	• TEST MODE

CD CORE UNIT(S9MP3)

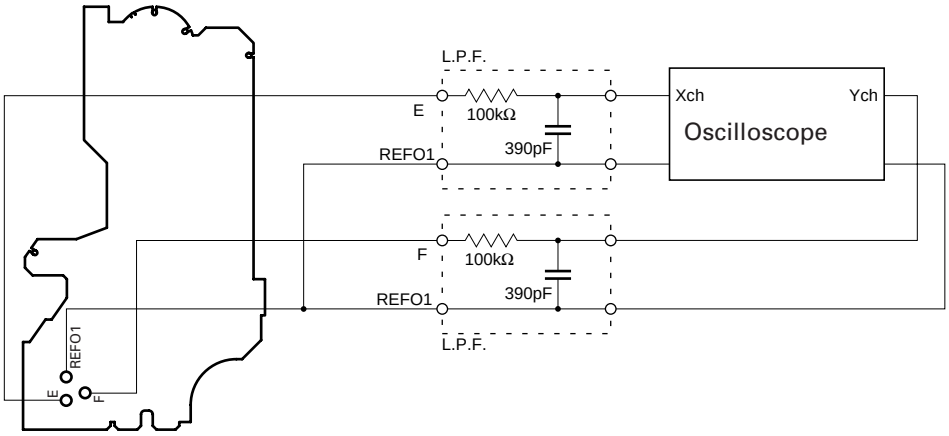

• **Checking Procedure**
1. In test mode, load the disc and switch the 5V regulator on.
2. Using the ► and ◄ buttons, move the PU unit to the innermost track.
3. Press key **3** to close focus, the display should read "91". Press key **2** to implement the tracking balance adjustment the display should now read "81". Press key **3**. The display will change, returning to "81" on the fourth press.
4. As shown in the diagram above, monitor the LPF outputs using the oscilloscope and check that the phase difference is within 75° . Refer to the photographs supplied to determine the phase angle.
5. If the phase difference is determined to be greater than 75° try changing the PU unit to see if there is any improvement. If, after trying this a number of times, the grating angle does not become less than 75° then the mechanism should be judged to be at fault.

• **Note**
Because of eccentricity in the disc and a slight misalignment of the clamping center the grating waveform may be seen to "wobble" (the phase difference changes as the disc rotates). The angle specified above indicates the average angle.

• **Hint**
Reloading the disc changes the clamp position and may decrease the "wobble".

Grating waveform

Ech → Xch 20mV/div, AC
Fch → Ych 20mV/div, AC

0°

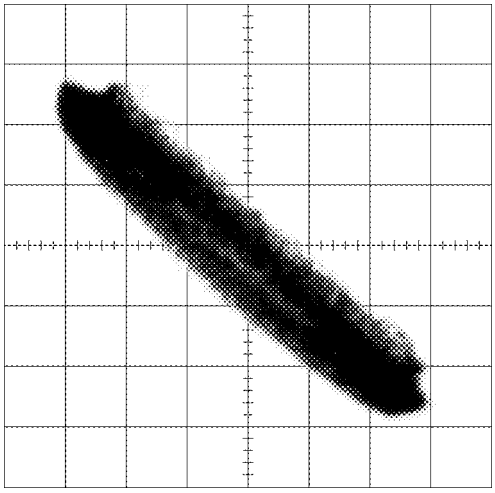

30°

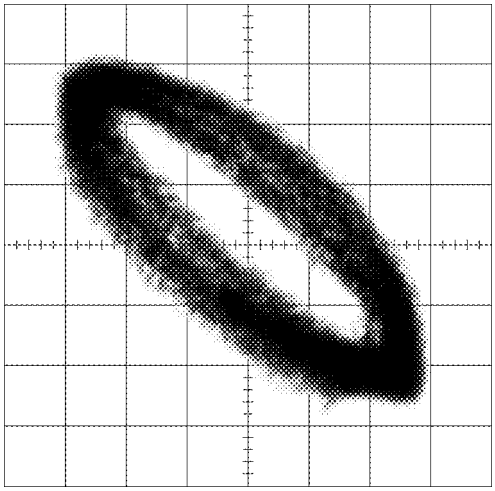

45°

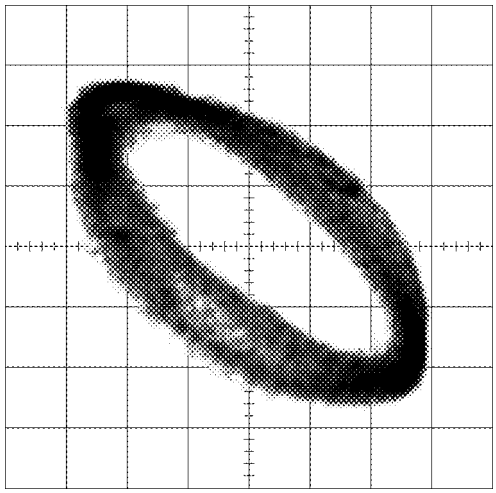

60°

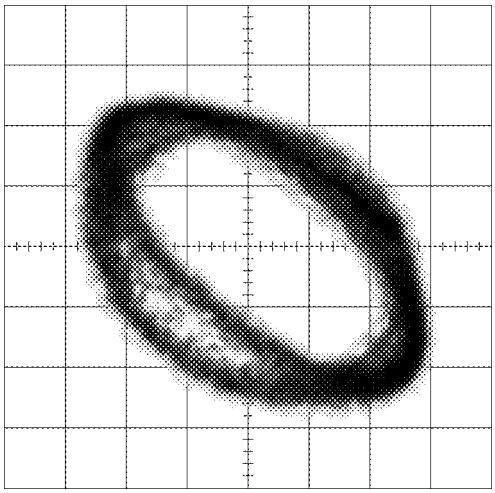

75°

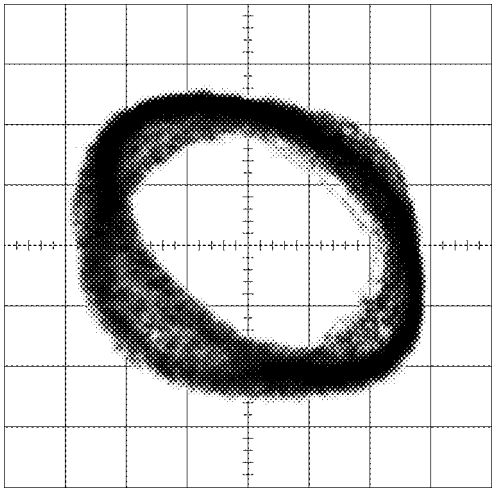

90°

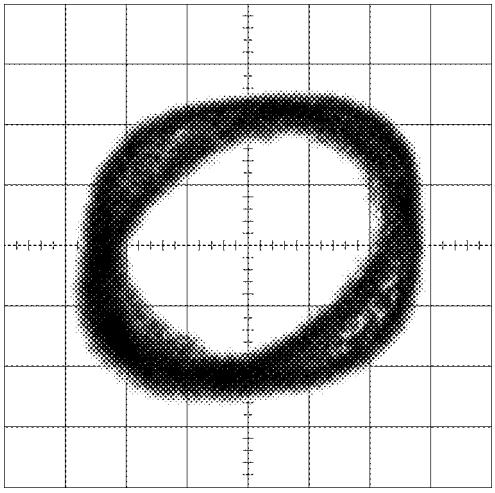

6.5 CD TEST MODE

● Error Messages

If a CD is not operative or stopped during operation due to an error, the error mode is turned on and cause(s) of the error is indicated with a corresponding number. This arrangement is intended at reducing nonsense calls from the users and also for facilitating trouble analysis and repair work in servicing.

(1) Basic Indication Method

1) When SERRORM is selected for the CSMOD (CD mode area for the system), error codes are written to DMIN (minutes display area) and DSEC (seconds display area). The same data is written to DMIN and DSEC. DTNO remains in blank as before.

2) Head unit display examples

Depending on display capability of LCD used, display will vary as shown below. xx contains the error number.

8-digit display	6-digit display	4-digit display
ERROR–xx	ERR–xx	E–xx

(2) Error Code List

Code	Class	Displayed error code	Description of the code and potential cause(s)
10	Electricity	Carriage Home NG SERVO LSI Communication Error	CRG can't be moved to inner diameter. CRG can't be moved from inner diameter. → Failure on home switch or CRG move mechanism. Communication error between microcomputer and SERVO LSI.
11	Electricity	Focus Servo NG	Focusing not available. → Stains on rear side of disc or excessive vibrations on REWRITABLE.
12	Electricity	Spindle Lock NG Subcode NG	Spindle not locked. Sub-code is strange (not readable). → Failure on spindle, stains or damages on disc, or excessive vibrations. A disc not containing CD-R data is found. Turned over disc are found, though rarely. CD signal error.
17	Electricity	Setup NG	AGC protection doesn't work. Focus can be easily lost. → Damages or stains on disc, or excessive vibrations on REWRITABLE.
30	Electricity	Search Time Out	Failed to reach target address. → CRG tracking error or damages on disc.
44	Electricity	ALL Skip	Skip setting for all track. (CD-R/RW)
50	Mechanism	CD On Mech Error	Mechanical error during CD ON. → Defective loading motor, mechanical lock and mechanical sensor.
A0	System	Power Supply NG	Power (VD) is ground faulted. → Failure on SW transistor or power supply (failure on connector).

Remarks: Mechanical errors are not displayed (because a CD is turned off in these errors).
Unreadable TOC does not constitute an error. An intended operation continues in this case.
Upper digits of an error code are subdivided as shown below:
1x: Setup relevant errors, 3x: Search relevant errors, Ax: Other errors.

● New Test Mode

S-CD plays the same way as before.
If an error such as off focus, spindle unlocking, unreadable sub-code, or sound skipping occurs after setup, its cause and time occurred (in absolute time) are displayed.
During setup, operational status of the control software is displayed.
These displays and functions are prepared for enhancing aging in the servicing and efficiency of trouble analysis.

(1) Shifting to the New Test Mode

① Turn on the current test mode by starting the reset from the key.

② Select S-CD for the source through the specified procedure including use of the [SOURCE] key, and inserting the disc. Then, press the [Jump Mode Selector] key while maintaining the regulator turned off.

③ After the above operations, the new test mode remains on irrespective of whether the S-CD is turned on or off.
You can reset the new test mode by turning on the reset start.

(2) Key Correspondence

Key	Test mode		New test mode	
	Regulator Off	Regulator On	In-play	Error Production
BAND	To regulator on	To regulator off	–	Time/Err.No. switching
►	–	FWD-Kick	FF/TR+	–
◄	–	REV-Kick	REV/TR-	–
1	–	Tracking Close	Scan	–
2	–	Tracking Open	Mode	–
3	–	Focus Close	–	–
–	–	Focus Open	–	–
–	–	Jump Off	–	–
6	To new test mode	Jump mode switching	Auto/Manu	–

Note: Eject and CD on/off is performed in the same procedure as that for the normal mode.

(3) Cause of Error and Error Code

Code	Class	Contents	Description and cause
40	Electricity	Off focus detected.	FOK goes low. → Damages/stains on disc, vibrations or failure on servo.
41	Electricity	Spindle unlocked.	LOCK = Low continued for 150 msec. → Damages/stains on disc, vibrations or failure on servo.
42	Electricity	Sub-code unreadable.	Sub-code was unreadable for 500 msec. → Damages/stains on disc, vibrations or failure on servo.
43	Electricity	Sound skipping detected.	Last address memory function was activated. → Damages/stains on disc, vibrations or failure on servo.

Note: Mechanical errors during aging are not displayed.

(4) Display of Operational Status during Setup

Status No.	Contents	Protective action
21	Focus search start	Focus search timeout.
22	Focus search 2	Focus search timeout.
23	Focus search 3	Focus search timeout.
24	Focus search 4	Focus search timeout.
25	Focus search(Setup protection)	Focus slips off.
26	Focus search(Fast recovery)	Focus slips off.
27	RF detection	Focus slips off.
28	Spindle rough servocontrol	Focus slips off.
29	Tracking balance adjustment start	Focus slips off.
30	Tracking balance adjustment 2	Focus slips off.
31	Tracking balance adjustment 3	Focus slips off.
32	Tracking close start(Spindle stationary servocontrol setting)	Focus slips off.
33	Tracking close 2	Focus slips off.
34	Tracking close 3	Focus slips off.
35	Focus/Tracking AGC start	Focus slips off.
36	Focus/Tracking AGC 2	Focus slips off.
37	Focus/Tracking AGC 3	Focus slips off.
38	Focus/Tracking AGC 4	Focus slips off.
39	Focus/Tracking AGC 5	Focus slips off.
40	Focus/Tracking AGC 6	Focus slips off.
41	Focus/Tracking AGC 7	Focus slips off.
42	Focus/Tracking AGC 8	Focus slips off.
43	FE bias start	Focus slips off.
44	FE bias 2	Focus slips off.
45	RF AGC start	Focus slips off.
46	RF AGC 2	Focus slips off.
47	Lock check start	Focus slips off.
48	Lock is being checked	Focus slips off.
49	Subcode check start	Focus slips off, spindle lock is not performed.
50	Subcode is being checked	Focus slips off, no subcode can be read.

(5) Display Examples

1) During Setup

8-digit display, 6-digit display	4-digit display(Auto setting)	4-digit display(Manual setting)
TNO. Min Sec	TNO.	Min Sec
11 11' 11"	11	11' 11"

2) During Operation (TOC read, TRK search, Play, FF and REV)

The same as in the normal mode.

3) When a Protection Error Occurred

(A) Error display ((A)←→(B), (C) : BAND key)

8-digit display	6-digit display	4-digit display
ERROR-xx	ERR-xx	E-xx

(B) Error occurrence timing display in track no. ((B)←→(C) : Auto/Manual key)

8-digit display, 6-digit display	4-digit display(Auto setting)
TNO. Min Sec	TNO.
10 40' 05"	10

(C) Error occurrence timing display in absolute time. ((B)←→(C) : Auto/Manual key)

8-digit display, 6-digit display	4-digit display(Manual setting)
TNO. Min Sec	Min Sec
10 40' 05"	40' 05"

7. GENERAL INFORMATION

7.1 DIAGNOSIS

7.1.1 DISASSEMBLY

● **Removing the Case Unit (Fig.1)**

1 Remove the screw and then remove the Case Unit.

*) Release the latches in order of the number indicated in Fig.1.

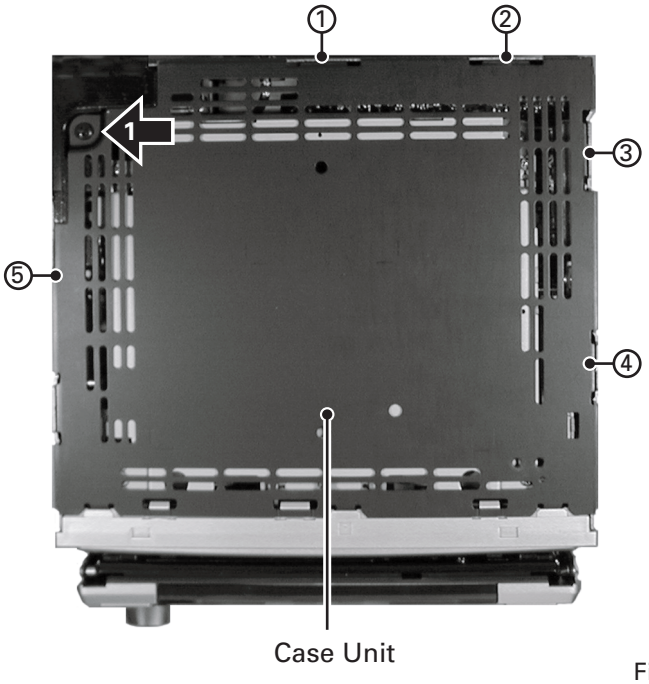

Fig.1

● **Removing the CD Mechanism Module (Fig.2)**

1 Remove the four screws.

Disconnect the connector and then remove the CD Mechanism Module.

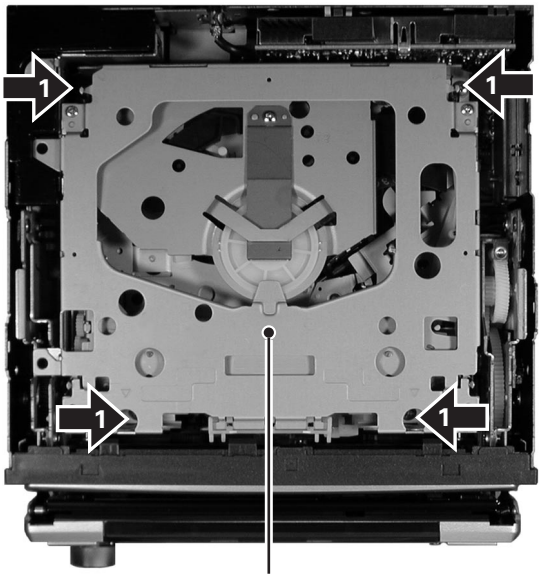

Fig.2

● Moving the Arm Unit position (Fig.3)

Use the finger. Rotate the gear in the direction indicated by arrow in Fig.3 until the Arm Unit moves to the 3 positions of a Fig.3.

*) There is a possibility of bending if load is added to the arm parts, It becomes the cause of defect of move of the grille parts. When you place a product, please go in the CLOSE POSITION.

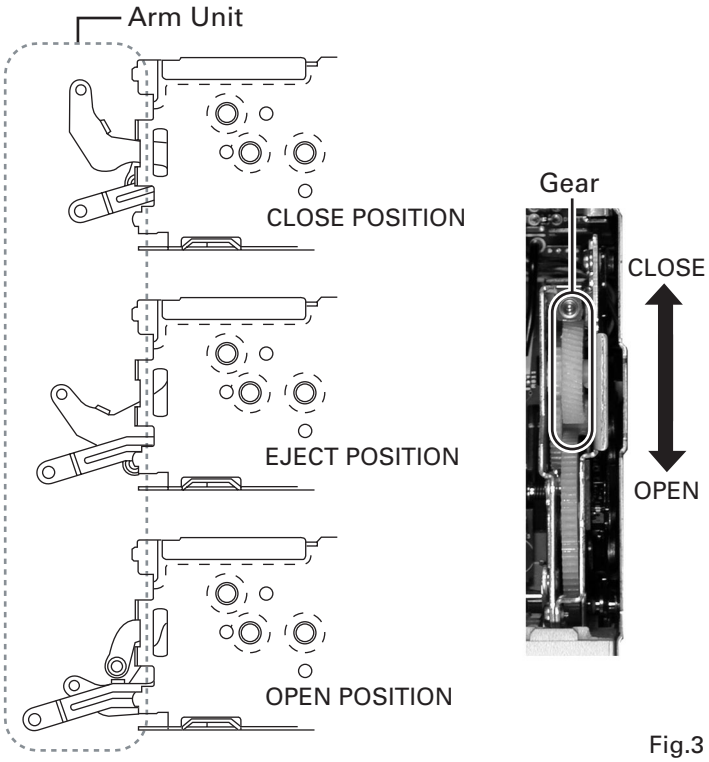

Fig.3

● Removing the Detach Grille Assy and Grille Assy

Move the Arm Unit to the OPEN POSITION. (Fig.3)

1 Remove the two screws. (Fig.4)

Disconnect the connector and then remove the Detach Grille Assy.

*) When installing the screws, please make sure that the spring is also installed.

2 Remove the two screws. (Fig.4)

Move the Arm Unit to the EJECT POSITION. (Fig.3)

Disconnect the connector and then remove the Grille Assy.

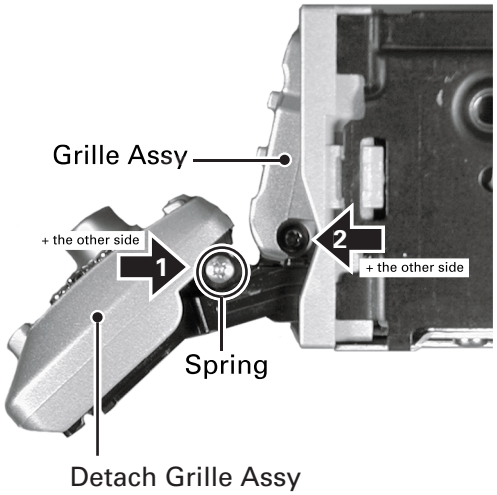

Fig.4

● Removing the Panel Unit

Move the Arm Unit to the OPEN POSITION. (Fig.3)

1 Remove the two screws and then remove the Panel Unit. (Fig.5)

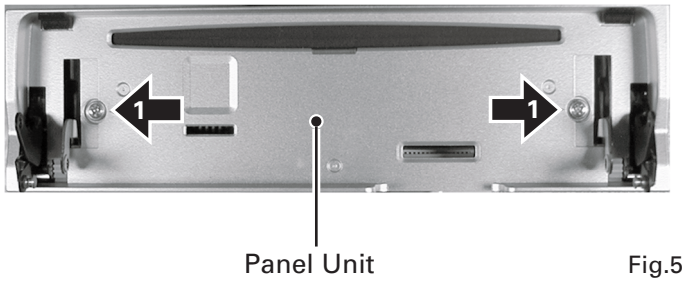

Fig.5

● Removing the Gear Unit

Move the Arm Unit to the CLOSE POSITION. (Fig.3)

1 Remove the four screws and then remove the Gear Unit. (Fig.6)

*) When you remove or intall the Gear Unit, do so with the Arm Unit in the CLOSE POSITION.

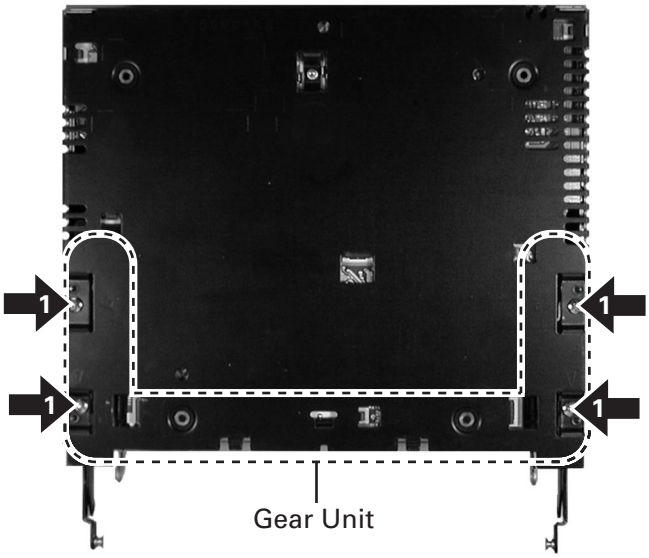

Fig.6

● Checkpoints for the Gear Unit

1. When you disassemble or assemble the Gear Unit, do so with the Arm Unit in the CLOSE POSITION.
   Make sure that the Arm Unit is in the CLOSE POSITION by seeing the other side of the unit through the fully circular hole shown in the figure.

2. When you install the motor, fix the screws holding the motor in the direction of the arrow shown in the figure.

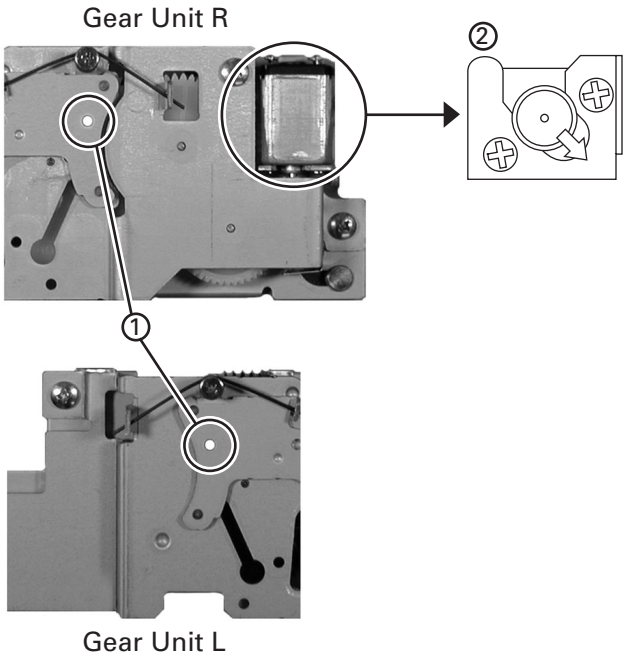

● **Removing the Tuner Amp Unit (Fig.7)**

There are two ways of removing the Tuner Amp Unit.
One is to remove the Gear Unit (Fig.6), then Tuner Amp Unit, and the other is to remove the Panel (Fig.5), then Tuner Amp Unit.

1 Remove the two screws.

Release the two latches and then remove the Holder.

2 Remove the screw.

3 Remove the two screws.

4 Straight the tabs at three locations indicated.

5 Remove the screw and then remove the Tuner Amp Unit.

*) Tuner Amp Unit is different partially from this photo.

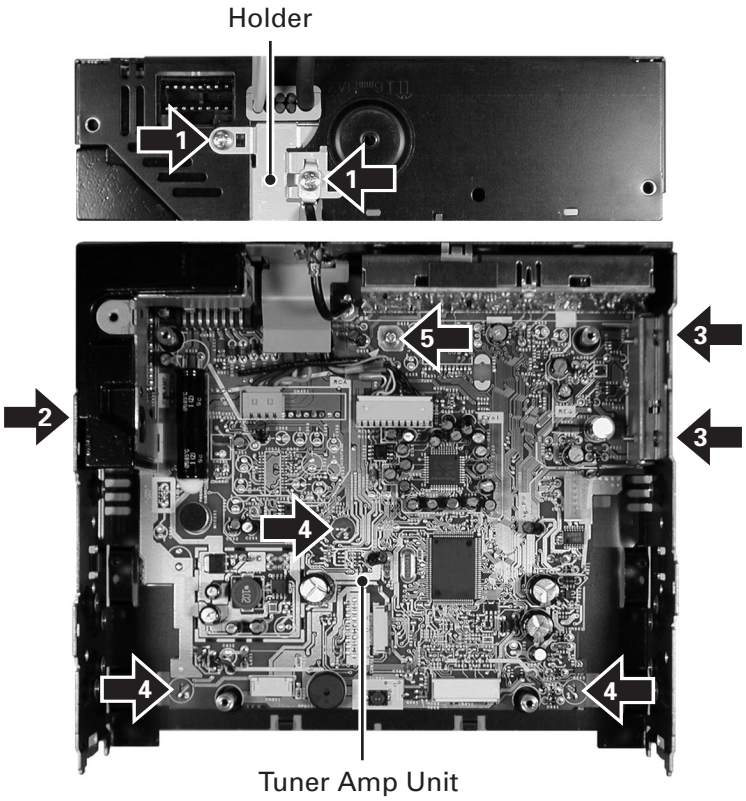

Fig.7

● Removing the OEL Unit

1. Apply hot air to the cable pins for the anode terminal using a blower used for removing a flat-packaged IC or something like that. When all the pins are peeling off from the PCB, pinch the cable with a pair of tweezers and remove it slowly from the PCB. (Fig.8)

* Be careful not to remove other electrical parts when you use a blower. Especially, when hot air is appropriated to the VR1902 too much, the volume will destroy.
* Flexible cable may not remove easily by transforming the Bosses by the hot air of the Blower.

2. Five tabs are extended until becoming straight in the direction of the arrow and then remove the Holder. (Fig.8)
3. Slowly set up the OEL Unit. At this time, the stress is prevented from hanging to flexible cable in the Cathode terminal. (Fig.9)
4. The Cathode terminal is removed according to the procedure same as the Anode terminal, and the OEL Unit is removed. (Fig.9)
5. Remove the Holder. (Remove after removing the Cathode terminal without fail.) (Fig.9)

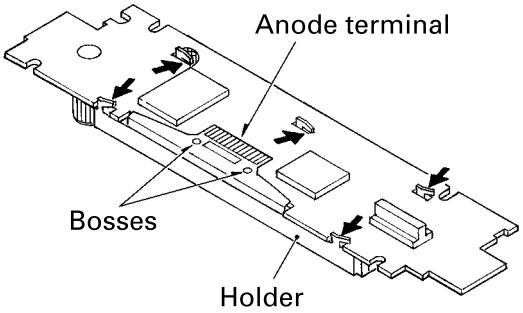

Fig.8

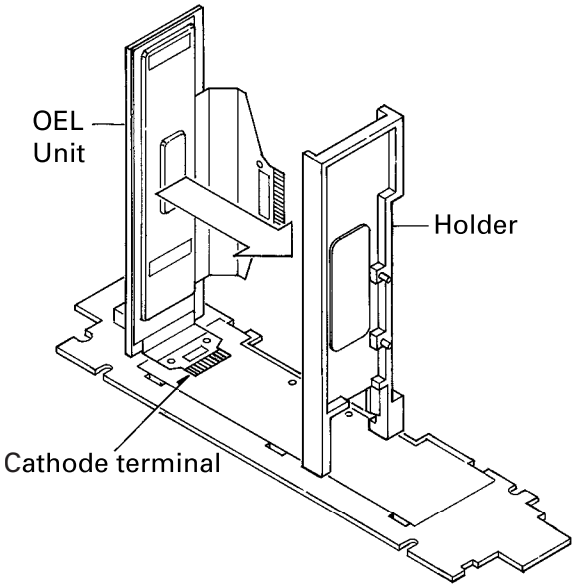

Fig.9

● Installing the OEL Unit

1. Install the Holder in the OEL Unit. (Fig.10)
2. When soldering the flexible cable for the Cathode terminal on the PCB, use a pair of tweezers. First, insert the tips of tweezers into 2 holes in the flexible cable, then into the 2 holes in the PCB. (Fig.10)
3. Position the flexible cable on the PCB so that their lands touch each other. (Fig.10)
4. Apply solder to each pin of the flexible cable. (Fig.10)

* Appropriate soldering iron lightly so that the stress should not hang to Flexible cable.

5. Lay down the OEL Unit. (Fig.10)
6. Install the Holder. (Fig.8)
7. When soldering the flexible cable for the Anode terminal on the PCB, first, insert the Bosses on the PCB into the 2 holes in the flexible cable. Then, take the same procedures 2 and 3 as that for the Cathode terminal to solder the cable pins. (Fig.8)

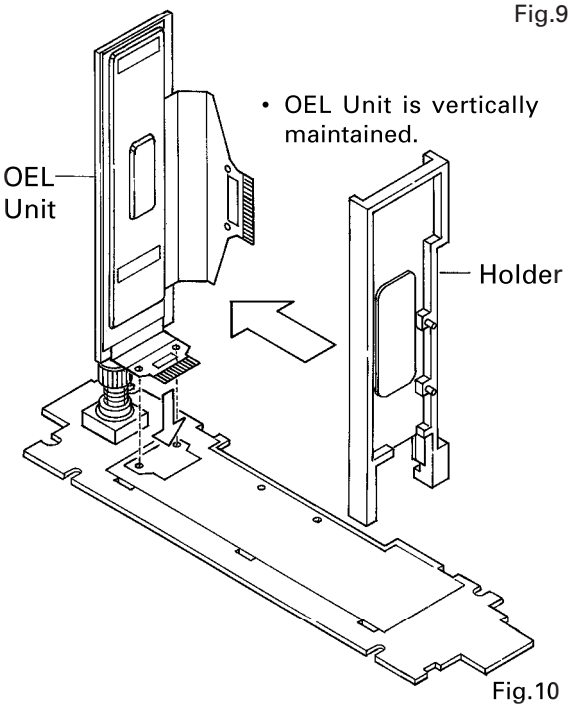

Fig.10

● How to hold the Mechanical Unit

1. Hold the top and bottom frame.
2. Do not squeeze top frame's front portion too tight, because it is fragile.

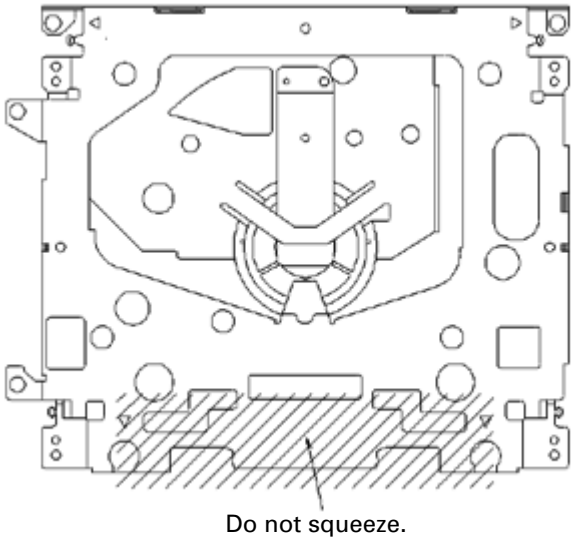

● How to remove the Top and Bottom Frame

1. When the disk is in "clamp" state, unlock Spring A (6 pieces) and Spring B (2 pieces), and unscrew screws (4 pieces).
2. Unlock each 1 of pawl at the both side of the frame, then remove the top frame.
3. Remove the Carriage Mechanical part in such way that; you remove the mechanical part from 3 pieces of Damper while slowly pulling up the part.
4. Now, the top frame has been removed, and under this state, fix the genuine Connector again, and eject the disk.
   (Caution)
   When you reassemble the Carriage Mechanical part, apply a bit of alcohol to Dampers.

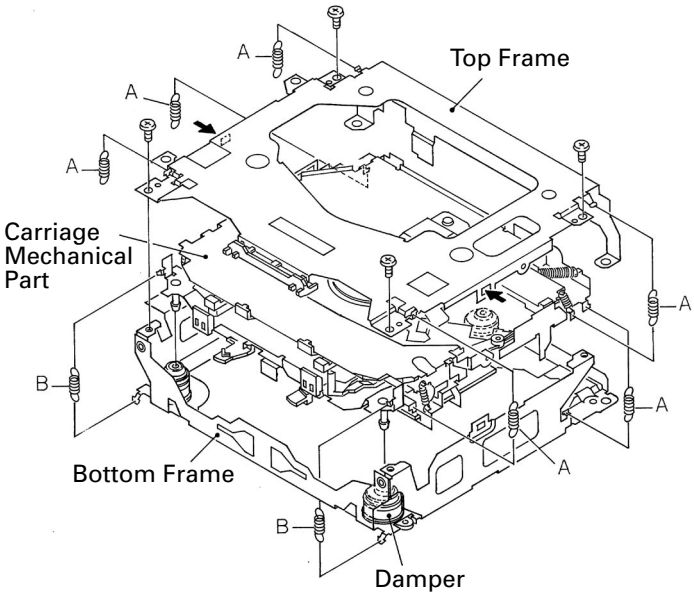

● How to remove the Guide Arm Assy

1. Unlock the spring (1 piece) at the right side of the assembly.
2. Unscrew screws (2 pieces), then remove the Screw Gear Bracket.
3. Shift the Guide Arm Assy to the left and slowly rotate it to the upper direction.
4. When the Guide Arm Assy rotates approximately 45 degree, shift the Assy to the right side direction and remove it.

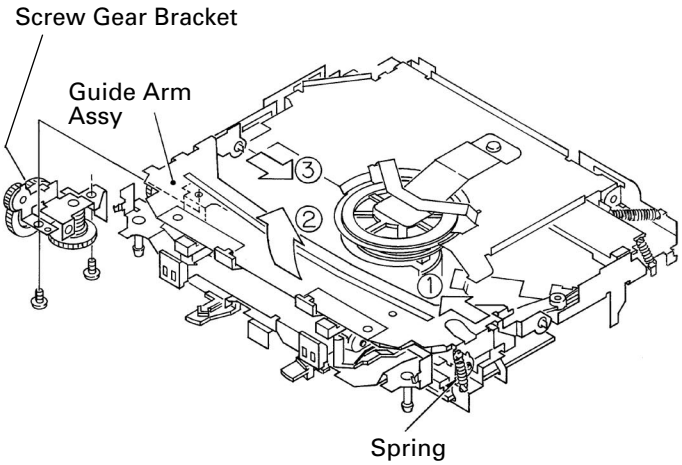

● How to remove the CD Core Unit(S9MP3)

1. Give jumper-solder treatment to the Flexible Wire of the Pickup unit, then remove the wire from the Connector.
2. Remove all 4 points of solder-treatment on the Lead Wire. Also, unscrew the screw(1 piece).
3. Then, Remove the CD Core Unit(S9MP3).
   (Caution)
   Be careful not to damage SW when you reassemble the CD Core Unit(S9MP3) into the device.

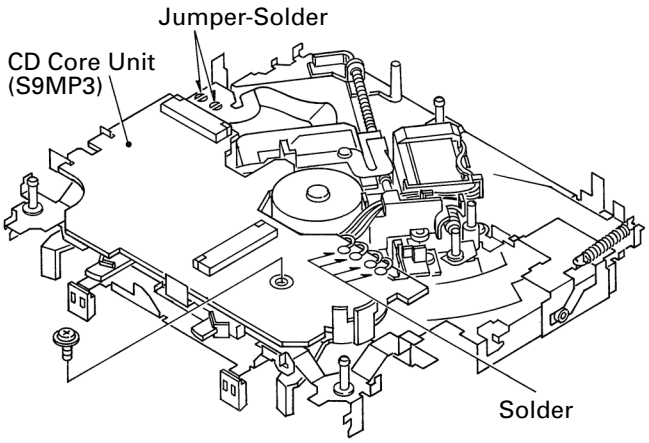

● How to remove the Loading Arm Assy

1. Unlock the spring (1 piece) and remove the E ring (1 piece) of the Fulcrum Shaft.
2. Shift the arm to the left side direction and unlock pins (2 pieces).

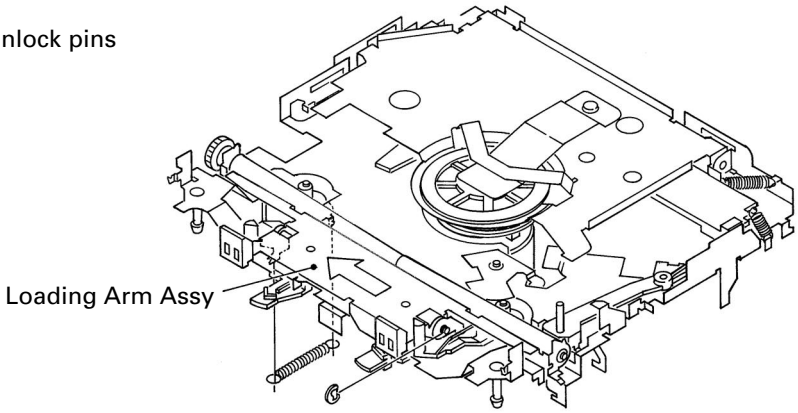

● How to remove the Pickup Unit

1. Unscrew 2 pieces of screws, then remove the Pulley Cover.
2. Remove the Feed Screw unit from the pawl of the Feed Screw Guide (The pawl is located inside the guide).
3. Remove the belt from the Pulley, then remove the Pickup unit.
   (Caution)
   Make sure not to stain the belt with grease when you fix the belt.

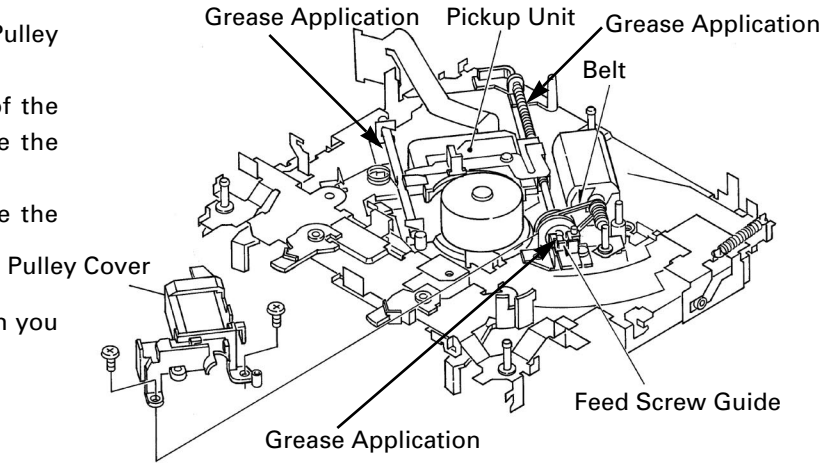

● Lubricants Points

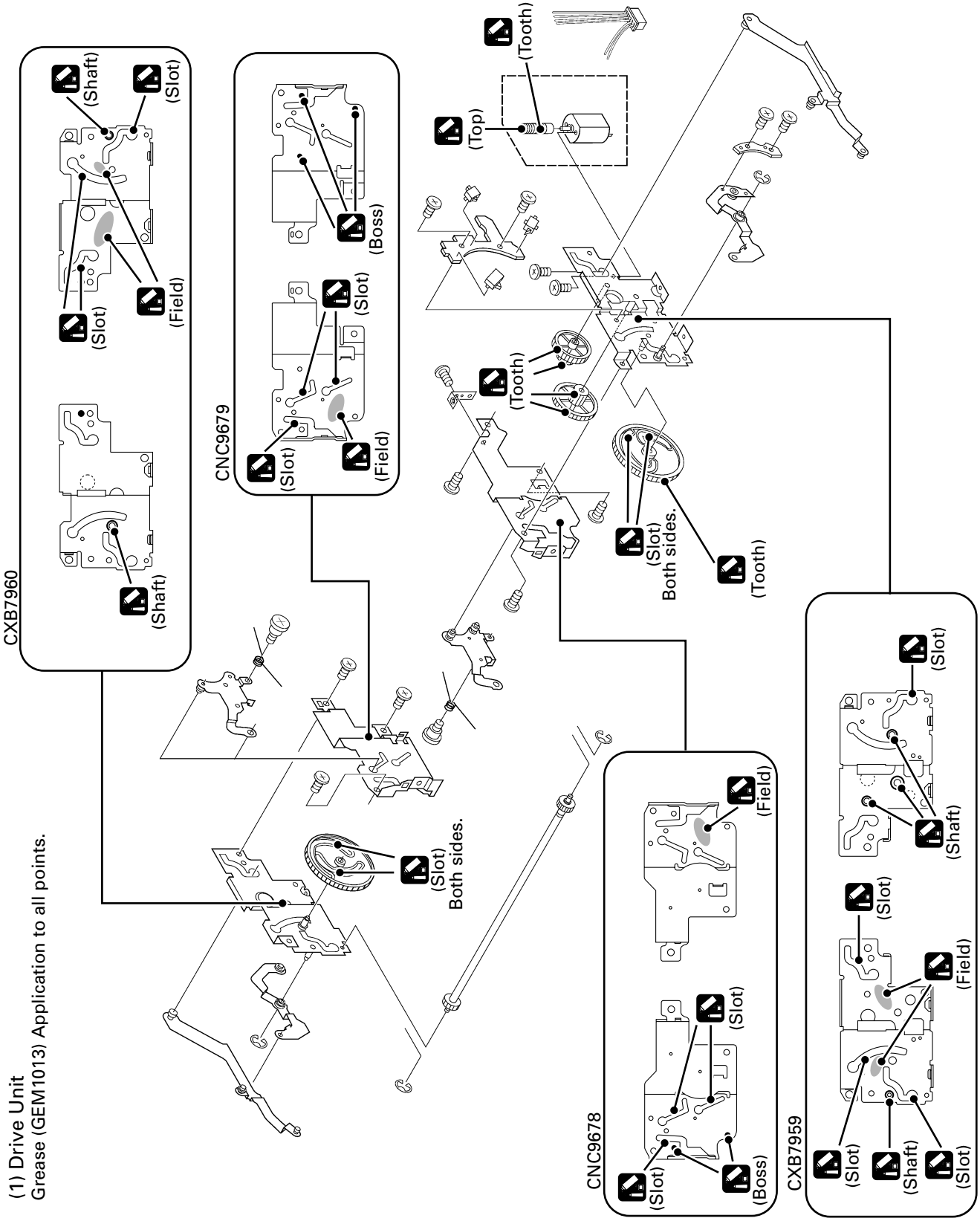

(1) Drive Unit
Grease (GEM1013) Application to all points.

(2) Button (CAC7247)

Lubricants (GEM1016) Application to all points.

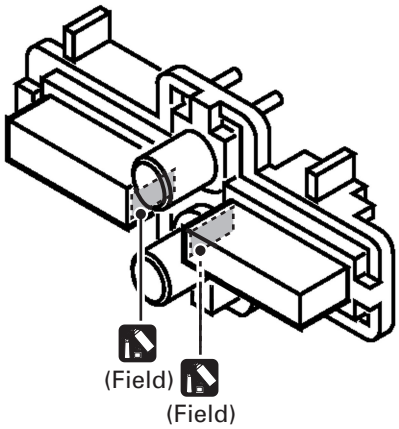

(3) Case Unit (CXB7968)

Lubricants (PN-38KE) Application to all points.

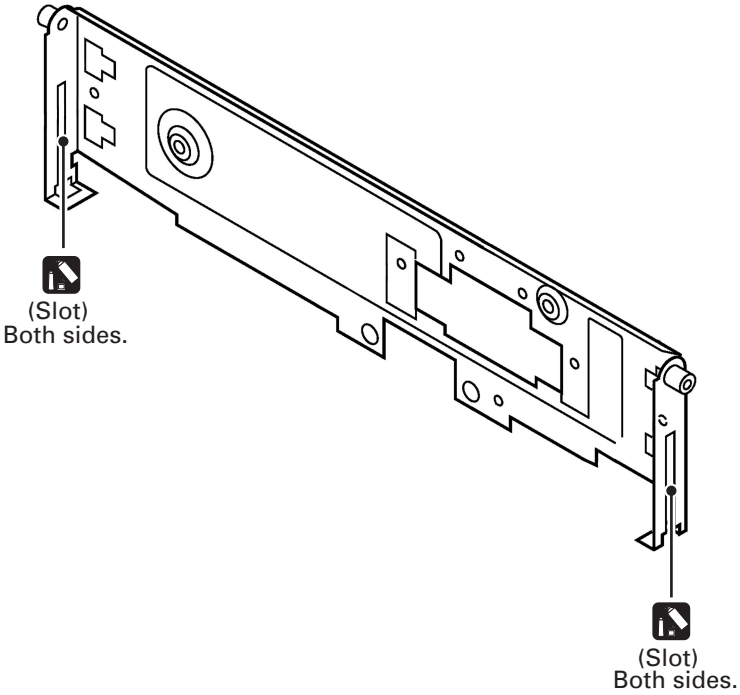

7.1.2 CONNECTOR FUNCTION DESCRIPTION

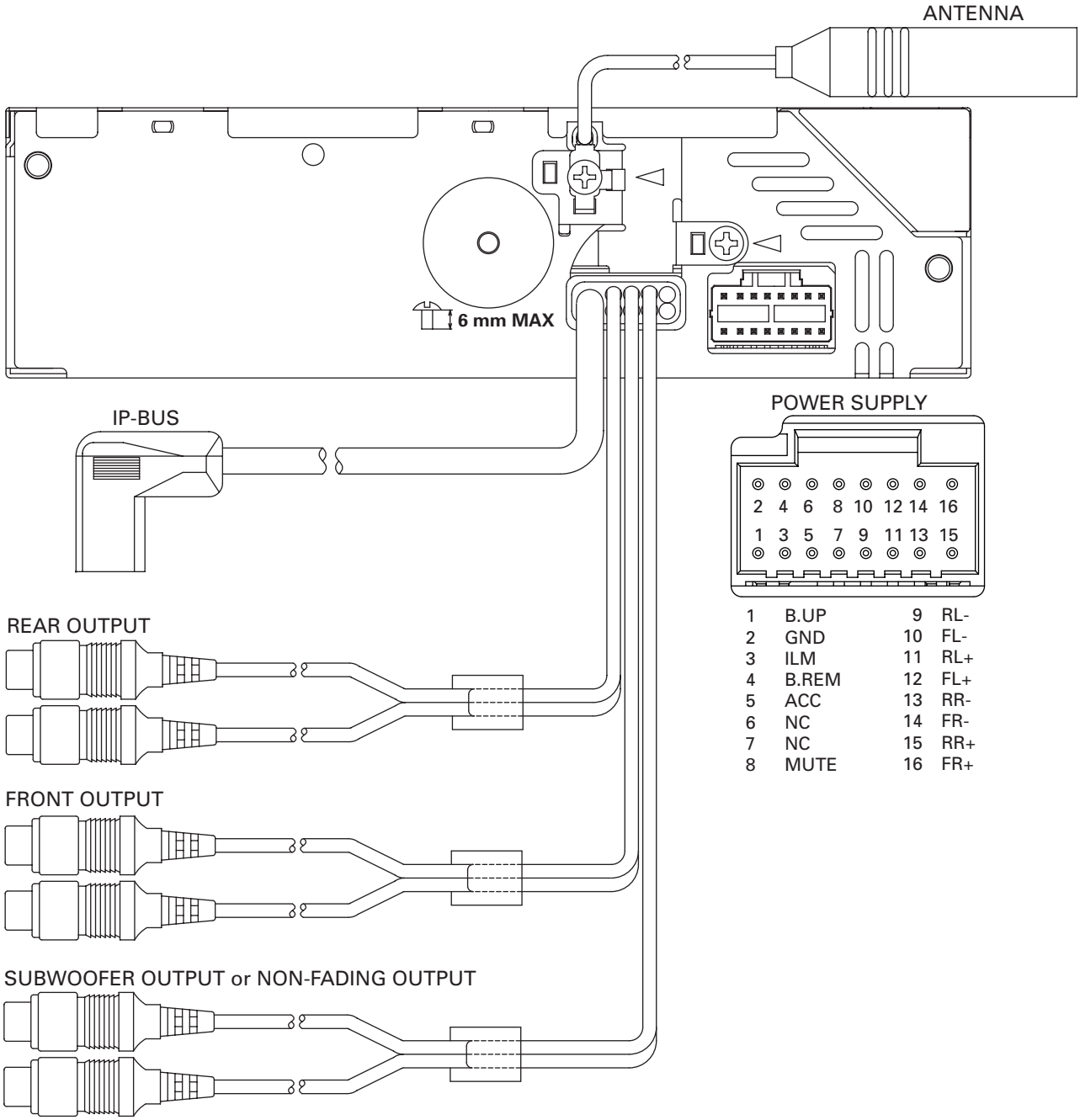

7.2 PARTS

7.2.1 IC

PD5741A	UPD63760GJ	PD9023A
PD5740A	MSM51V4265EP-70TS	UPD61002GC
PAL007A	BA033SFP	
PD8091A	BA5996FM	
PD8092A	PE5269A	
PD5745A	S-818A33AUC-BGN	
PD6340A	BA25BC0WFP	

● Pin Functions (PD5741A)(DEH-P840MP/XN/UC, P8400MP/XN/UC)

Pin No.	Pin Name	I/O	Function and Operation
1	BSO	O	P-BUS:Data output
2	$\overline{\text{BSCK}}$	O	P-BUS:Clock output
3	DUALILM	O	LCD:Illumination color select output
4	CD5VON	O	CDS:Eject sense output
5	VDT	O	EVOL:Data output
6	VST	O	EVOL:Strobe output
7	VCK	O	EVOL:Clock output
8	BYTE		Vss
9	VSS		Vss
10	TELIN	I	TEL:Telephone mute input
11	FLPPW	O	Auto flap motor power supply control output
12	RESET	I	Reset input(RESET)
13	XOUT	O	Clock output
14	VSS		Power supply input(Vss)
15	XIN	I	Clock input
16	VCC		Power supply input(Vcc)
17	NMI		Not used(Vcc)(Pull up)
18,19	NC		Not used
20	DALMON	O	Consumption current reduction output
21	IPBUSIN2	I	IP-BUS:Input 2
22	OELPW	O	OEL Unit:Power supply output(16.5V)
23	SYSPW	O	System power control output
24	PEE	O	Beep tone output
25	NC		Not used
26	ROMCS	O	External ROM:Chip select output
27	ROMCK	O	External ROM:Clock output
28	ROMDATA	I/O	External ROM:Data input / output
29	IPBUSIN	I	IP-BUS:Data input
30	IPBUSOUT	O	IP-BUS:Data output
31	DPDT1	O	OEL Unit:Grille microcomputer communication data output
32	KYDT1	I	OEL Unit:Grille microcomputer communication data input
33,34	NC		Not used
35	DPDT2	O	LCD:Grille microcomputer communication data output
36	KYDT2	I	LCD:Grille microcomputer communication data input
37, 38	ROT1, 0	I	Rotary encoder pulse input 1, 0
39	PCL	O	Clock adjustment output
40	SWVDD1	O	OEL Unit:Grille microcomputer power supply output(5.1V)
41	DISPPW	O	LCD:Power supply control output
42	ILMPW1	O	OEL Unit:Illumination power supply output(9.3V)
43	ILMPW2	O	LCD:Illumination power supply output
44-48	NC		Not used

Pin No.	Pin Name	I/O	Function and Operation
49	$\overline{ST}$	I	TUNER:Stereo input
50	SD	I	TUNER:SD input
51-53	NC		Not used
54	LOCH	O	Local H output
55	TUNPDO	O	TUNER:PLL data output
56	TUNPDI	I	TUNER:PLL data input
57	TUNPCK	O	TUNER:PLL clock output
58	LOCL	O	Local L output
59	BRXEN	I/O	P-BUS:Communication input / output
60	BRST	O	P-BUS:Reset output
61	NC		Not used
62	VCC		Power supply input(Vcc)
63	NC		Not used
64	VSS		Connect to GND
65	FLPCLS	O	Auto flap close output
66	FLPOPN	O	Auto flap open output
67	$\overline{FLPEJSW}$	I	Auto flap eject sense input
68	$\overline{FOPNSW}$	I	Auto flap open sense input
69	$\overline{FCLSSW}$	I	Auto flap close sense input
70	FLPILM	O	DISC loading slot illumination output
71	$\overline{TUNPCE2}$	O	TUNER:PLL chip enable output 2
72	TUNPCE	O	TUNER:PLL chip enable output
73	$\overline{BSENS}$	I	Backup sense input
74	$\overline{ASENS}$	I	ACC sense input
75	NC		Not used
76-78	SMPXS2-0	O	Multiplexor select output 2-0
79	SWVDD2	O	LCD:Grille microcomputer power supply output(5V)
80	NC		Not used
81	IPPW	O	IP-BUS:Driver power supply control output
82	ASENBO	O	IP-BUS:Slave ACC sense output
83	$\overline{ISENS}$	I	Illumination sense input
84	DIMMER	O	LCD:Dimmer output
85	$\overline{BSRQ}$	I	P-BUS:Communication request input
86	NC		Not used
87	MUTE	O	Mute output
88	TESTIN	I	Test program input
89	SAIN	I	Spectrum Analyzer input
90	ASLIN	I	ASL input
91	MODEL	I	Model select input
92,93	NC		Not used
94	DSENS	I	Detach sense input
95	NC		Not used
96	AVSS		A/D converter power supply input(Vss)
97	SL	I	TUNER:Signal level input
98	VREF		A/D converter reference voltage(Vref)
99	AVCC		A/D converter power supply input(Vcc)
100	BSI	I	P-BUS:Data input

*PD5741A

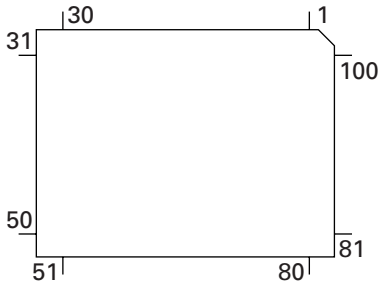

IC's marked by * are MOS type.
Be careful in handling them because they are very liable to be damaged by electrostatic induction.

● Pin Functions (PD5740A)(DEH-P8450MP/XN/ES)

Pin No.	Pin Name	I/O	Function and Operation
1	BSO	O	P-BUS:Data output
2	$\overline{\text{BSCK}}$	O	P-BUS:Clock output
3	DUALILM	O	LCD:Illumination color select output
4	CD5VON	O	CDS:Eject sense output
5	VDT	O	EVOL:Data output
6	VST	O	EVOL:Strobe output
7	VCK	O	EVOL:Clock output
8	BYTE		Vss
9	VSS		Vss
10	TELIN	I	TEL:Telephone mute input
11	FLPPW	O	Auto flap motor power supply control output
12	RESET	I	Reset input(RESET)
13	XOUT	O	Clock output
14	VSS		Power supply input(Vss)
15	XIN	I	Clock input
16	VCC		Power supply input(Vcc)
17	NMI		Not used(Vcc)(Pull up)
18,19	NC		Not used
20	DALMON	O	Consumption current reduction output
21	IPBUSIN2	I	IP-BUS:Input 2
22	OELPW	O	OEL Unit:Power supply output(16.5V)
23	SYSPW	O	System power control output
24	PEE	O	Beep tone output
25	NC		Not used
26	ROMCS	O	External ROM:Chip select output
27	ROMCK	O	External ROM:Clock output
28	ROMDATA	I/O	External ROM:Data input / output
29	IPBUSIN	I	IP-BUS:Data input
30	IPBUSOUT	O	IP-BUS:Data output
31	DPDT1	O	OEL Unit:Grille microcomputer communication data output
32	KYDT1	I	OEL Unit:Grille microcomputer communication data input
33,34	NC		Not used
35	DPDT2	O	LCD:Grille microcomputer communication data output
36	KYDT2	I	LCD:Grille microcomputer communication data input
37, 38	ROT1, 0	I	Rotary encoder pulse input 1, 0
39	PCL	O	Clock adjustment output
40	SWVDD1	O	OEL Unit:Grille microcomputer power supply output(5.1V)
41	DISPPW	O	LCD:Power supply control output
42	ILMPW1	O	OEL Unit:Illumination power supply output(9.3V)
43	ILMPW2	O	LCD:Illumination power supply output
44-48	NC		Not used

Pin No.	Pin Name	I/O	Function and Operation
49	$\overline{ST}$	I	TUNER:Stereo input
50	SD	I	TUNER:SD input
51-53	NC		Not used
54	LOCH	O	Local H output
55	TUNPDO	O	TUNER:PLL data output
56	TUNPDI	I	TUNER:PLL data input
57	TUNPCK	O	TUNER:PLL clock output
58	LOCL	O	Local L output
59	BRXEN	I/O	P-BUS:Communication input / output
60	BRST	O	P-BUS:Reset output
61	NC		Not used
62	VCC		Power supply input(Vcc)
63	NC		Not used
64	VSS		Connect to GND
65	FLPCLS	O	Auto flap close output
66	FLPOPN	O	Auto flap open output
67	$\overline{FLPEJSW}$	I	Auto flap eject sense input
68	$\overline{FOPNSW}$	I	Auto flap open sense input
69	$\overline{FCLSSW}$	I	Auto flap close sense input
70	FLPILM	O	DISC loading slot illumination output
71	$\overline{TUNPCE2}$	O	TUNER:PLL chip enable output 2
72	TUNPCE	O	TUNER:PLL chip enable output
73	$\overline{BSENS}$	I	Backup sense input
74	$\overline{ASENS}$	I	ACC sense input
75	NC		Not used
76-78	SMPXS2-0	O	Multiplexor select output 2-0
79	SWVDD2	O	LCD:Grille microcomputer power supply output(5V)
80	NC		Not used
81	IPPW	O	IP-BUS:Driver power supply control output
82	ASENBO	O	IP-BUS:Slave ACC sense output
83	$\overline{ISENS}$	I	Illumination sense input
84	DIMMER	O	LCD:Dimmer output
85	$\overline{BSRQ}$	I	P-BUS:Communication request input
86	NC		Not used
87	MUTE	O	Mute output
88	TESTIN	I	Test program input
89	SAIN	I	Spectrum Analyzer input
90	ASLIN	I	ASL input
91	MODEL	I	Model select input
92,93	NC		Not used
94	DSENS	I	Detach sense input
95	NC		Not used
96	AVSS		A/D converter power supply input(Vss)
97	SL	I	TUNER:Signal level input
98	VREF		A/D converter reference voltage(Vref)
99	AVCC		A/D converter power supply input(Vcc)
100	BSI	I	P-BUS:Data input

*PD5740A

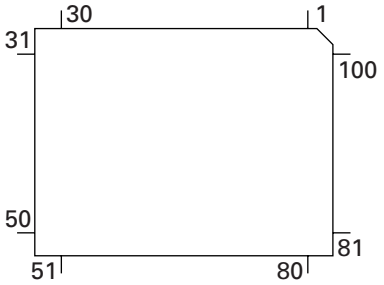

PAL007A

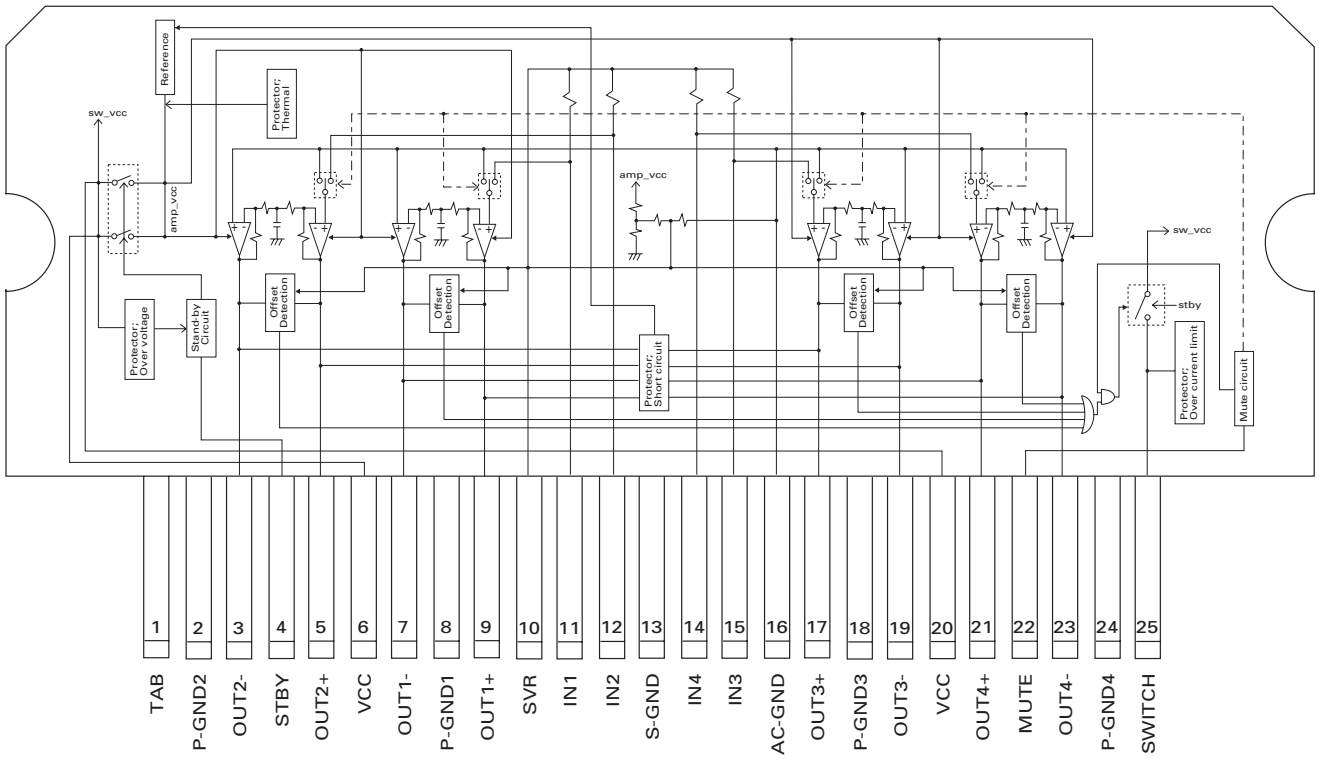

*PD8091A(DEH-P840MP/XN/UC)

*PD8092A(DEH-P8400MP/XN/UC, DEH-P8450MP/XN/ES)

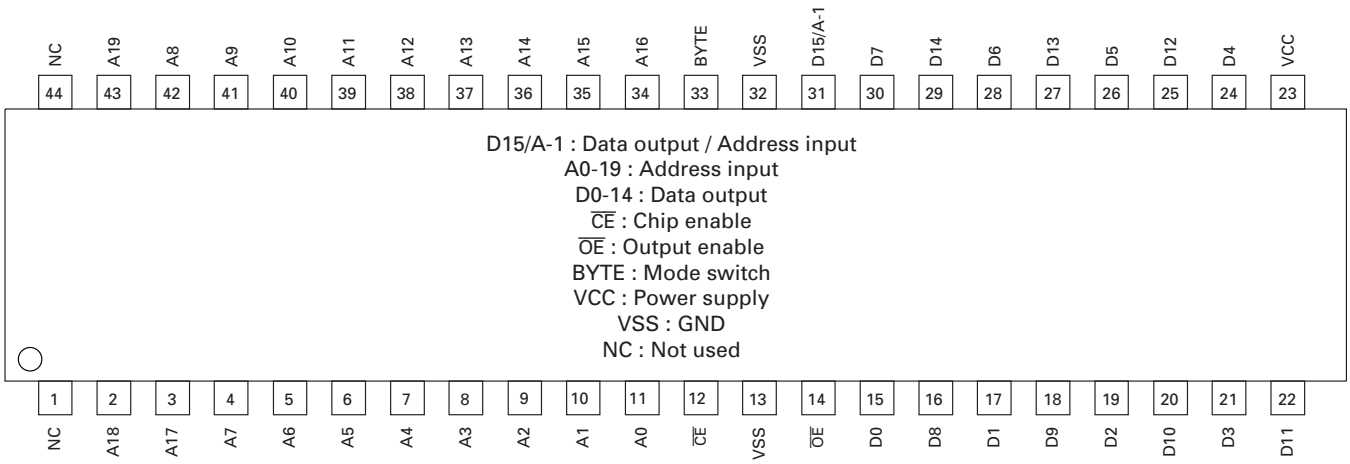

● **Pin Functions (PD5745A)**

Pin No.	Pin Name	I/O	Function and Operation
1-5	NC		Not used
6	BYTE	I	GND connection
7	CNVSS	I	GND connection
8, 9	NC		Not used
10	$\overline{\text{RESET}}$	I	Reset input
11	XOUT	O	Crystal oscillating element connection pin
12	VSS		VSS connection
13	XIN	I	Crystal oscillating element connection pin
14	VDD		VDD connection
15	$\overline{\text{NMI}}$	I	NVI input
16-19	NC		Not used
20	CKC	O	Fixed pulse output for cathode driver
21	NC		Not used
22	CKA	O	Fixed pulse output for anode driver
23	NC		Not used
24	LS	O	Line sink signal output
25	NC		Not used
26	CKD	O	Data transport / driver clock output
27	DPDT	I	Display data input
28	KYDT	O	Key data output
29	DA2	O	Display data MSB output
30	NC		Not used
31	CLK1	I	Clock input for UART1
32	ILMD	O	Dual illumination select output
33	DA1	O	Display data LSB output
34	NC		Not used
35	CLK0	I	Clock input for UART0
36	NC		Not used
37	$\overline{\text{RDY}}$	I	Pull up
38	NC		Not used
39	$\overline{\text{HOLD}}$	I	Pull up
40,41	NC		Not used
42	$\overline{\text{RD}}$	O	Read strobe output
43-45	NC		Not used
46	$\overline{\text{CS2}}$	O	Bank address select output
47	$\overline{\text{CS1}}$	O	Bank address select output
48	$\overline{\text{CS0}}$	O	External ROM chip select output
49	A19	O	Address bus 19 output
50	NC		Not used
51-59	A17-A9	O	Address bus 17-9 output
60	VDD		VDD connection
61	A8	O	Address bus 8 output
62	VSS		GND connection
63-69	A7-A1	O	Address bus 7-1 output
70	NC		Not used
71-86	D15-D0	I/O	Data bus 15-0 input / output
87,88	KS1,2	I/O	key strobe input / output
89-92	NC		Not used
93	KD2	I	key data input
94	AVSS		VSS connection
95	KD1	I	key data input
96	VREF		VSS connection
97	AVCC		VCC connection
98-100	NC		Not used

*PD5745A

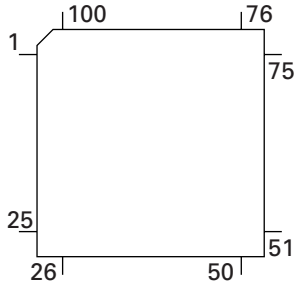

● **Pin Functions (PD6340A)**

Pin No.	Pin Name	I/O	Function and Operation
1-5	SEG4-0	O	LCD segment output
6-9	COM3-0	O	LCD common output
10	VLCD		LCD drive power supply
11-14	KST3-0	O	Key strobe output
15,16	KDT0,1	I	Key data input (analogue input)
17	REM	I	Remote control reception
18	DPDT	I	Display data input
19	NC		Not used
20	KYDT	O	Key data output
21	MODA		GND
22	X0		Crystal oscillator connection pin
23	X1		Crystal oscillator connection pin
24	VSS		GND
25,26	KDT2,3	I	Key data input
27	NC		Not used
28	KST4	O	Key strobe output
29-32	NC		Not used
33-55	SEG35-13	O	LCD segment output
56	VDD		Power supply
57-64	SEG12-5	O	LCD segment output

*PD6340A

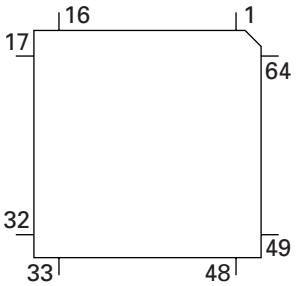

● **Pin Functions (UPD63760GJ)**

Pin No.	Pin Name	I/O	Function and Operation
1	R.GND		GND for DRAM I/F
2	$\overline{RST}$	I	Input of reset
3-7	AB12-8	I	Address bus 12-8 from the microcomputer
8-15	AD7-0	I/O	Address/data bus 7-0 to the microcomputer
16	$\overline{CS}$	I	Chip selection
17	ASTB	I	Address strobe
18	$\overline{READ}$	I	Control signals (read)
19	$\overline{WRITE}$	I	Control signals (write)
20	$\overline{WAIT}$	O	Control signals (wait)
21	INTQ		Interruption signals to the external microcomputer
22	IFMODE	I	Switching between the data buses (16bit/8bit)
23	D.VDD		Power supply for digital circuits
24	$\overline{XTALEN1}$	I	Permission to oscillate 16.9344MHz
25	$\overline{XTALEN2}$	I	Permission to oscillate 24.576MHz
26	DA.VDD		Power supply for DAC
27	ROUT	O	Output of audio for the right channel
28	DA.GND		GND for DAC
29	R+	O	Output of the right channel audio PWM
30	R-	O	Output of the right channel audio PWM
31	REGC		Connected to the capacitor for band gap
32	L-	O	Output of the left channel audio PWM
33	L+	O	Output of the left channel audio PWM
34	DA.GND		GND for DAC
35	LOUT	O	Output of audio for the left channel
36	DA.VDD		Power supply for DAC
37	X.VDD		Power supply for the crystal oscillator
38	XTAL1		Connected to the crystal oscillator (16.9344MHz)
39	$\overline{XTAL1}$		Connected to the crystal oscillator (16.9344MHz)
40, 41	X.GND		Ground for the crystal oscillator
42	$\overline{XTAL2}$		Connected to the crystal oscillator (24.576MHz)
43	XTAL2		Connected to the crystal oscillator (24.576MHz)
44	X.VDD		Power supply for the crystal oscillator
45	D.GND		GND for digital circuits
46	DIN	I	Input of audio data
47	DOUT	O	Output of audio data
48	SCKIN	I	Clock input for audio data
49	SCKO	O	Clock output for audio data
50	LRCKIN	I	Input of LRCK for audio data
51	LRCK	O	Output LRCK for audio data
52	TESTX	O	Output for tests
53	RFOK	O	Output of RFOK
54	C16M	O	Output of 16.9344MHz
55	TESTEN	I	Connected to GND
56	TEST4	I	Connected to GND
57	D.VDD		Power supply for digital circuits
58	RFCK/HOLD	O	Output of RFCK/HOLD signal
59	WFCK/MIRR	O	Output of WFCK/MIRR signal
60	PLCK	O	Output of PLCK
61	LOCK	O	Output of LOCK
62	C1D1	O	Information on error correction
63	C1D2	O	Information on error correction
64	C2D1(RMUTE)	O	Information on error correction (mute for Rch)
65	C2D2(LMUTE)	O	Information on error correction (mute for Lch)
66	C2D3	O	Information on error correction
67	D.GND		Ground for digital circuits
68	$\overline{RAS}$	O	Output of DRAM RAS

Pin No.	Pin Name	I/O	Function and Operation
69	$\overline{CAS0}$	O	Output of DRAM Lower CAS
70	$\overline{CAS1}$	O	Output of DRAM Upper CAS
71	$\overline{WE}$	O	Output of DRAM WE
72	$\overline{OE}$	O	Output of DRAM OE
73-88	RDB0-15	I/O	Input/output of DRAM Data0-15
89	D.GND		Ground for digital circuits
90-99	RA0-9	O	Output of DRAM Address0-9
100	D.VDD		Power supply for digital circuits
101-104	TEST0-3	I	Connected to GND
105	FD	O	Output of focus drive PWM
106	TD	O	Output of tracking drive PWM
107	SD	O	Output of thread drive PWM
108	MD	O	Output of spindle drive PWM
109	A.VDD		Power supply for the analog system
110	ATEST	O	Analog tests
111	EFM	O	Output of EFM signals
112	ASY	I	Input of asymmetry
113	C3T		Connection to the capacitor for detecting 3T
114	A.GND		Ground for the analog system
115	RFI	I	Input of RF
116	AGCO	O	Output of RF
117	AGCI	I	Input of AGC
118	RFO	O	Output of RF(AGC)
119, 120	EQ2, 1		Equalizer 2, 1
121	RF2-	I	Reversal input of RF2
122	RF-	I	Reversal input of RF
123	A.GND		Ground for the analog system
124	A	I	Input of A
125	C	I	Input of C
126	B	I	Input of B
127	D	I	Input of D
128	F	I	Input of F
129	E	I	Input of E
130	A.VDD		Power supply for the analog system
131	REFOUT	O	Output of reference voltage
132	REFC		Connected to the capacitor for output of REFOUT
133	FE-	I	Reversal input of FE
134	FEO	O	Output of FE
135	TE-	I	Reversal input of TE
136	TEO	O	Output of TE
137	TE2	O	TE2
138	TEC	I	TEC
139	A.GND		Ground for the analog system
140	LDREGO	O	Output of REG voltage for APC
141	PD	I	Input of PD
142	LD	O	Output of LD
143	PN	I	Assignment of pickup polarity
144	A.VDD		Power supply for the analog system

*UPD63760GJ

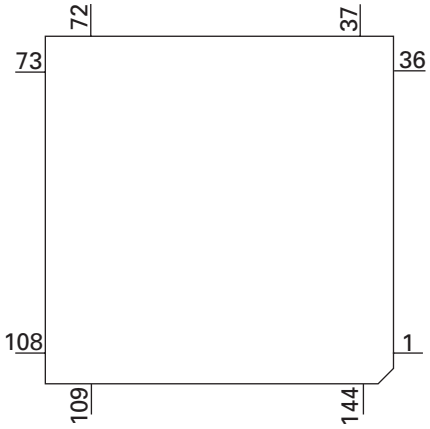

*MSM51V4265EP-70TS

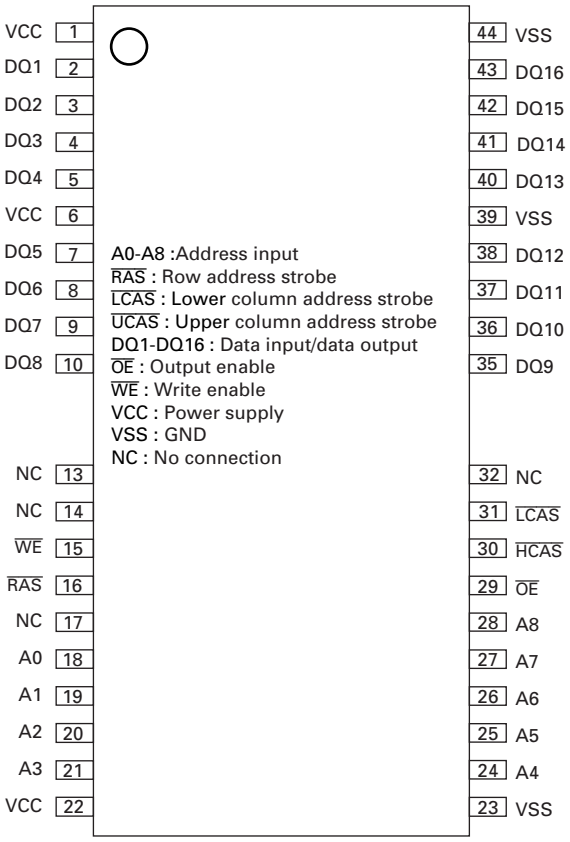

BA033SFP

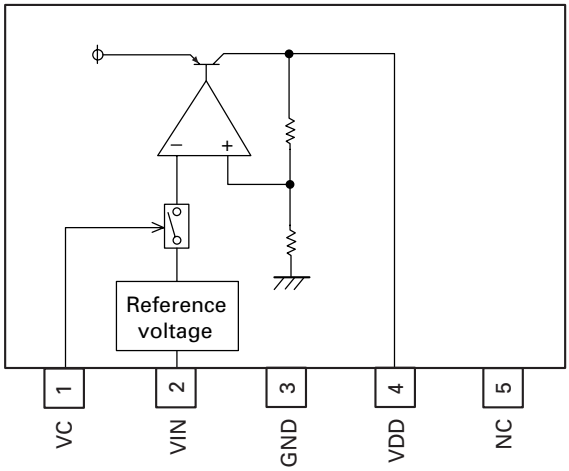

● Pin Functions(BA5996FM)

Pin No.	Pin Name	Function and Operation
1	VR	Input pin for reference voltage
2	OPIN2(+)	Input pin for non-inverting input for CH2 preamplifier
3	OPIN2(-)	Input pin for inverting input for CH2 preamplifier
4	OPOUT2	Output pin for CH2 preamplifier
5	OPIN1(+)	Input pin for non-inverting input for CH1 preamplifier
6	OPIN1(-)	Input pin for inverting input from CH1 preamplifier
7	OPOUT1	Output pin for CH1 preamplifier
8	GND	Ground pin
9	MUTE	Mute control pin
10	POWVCC1	Power supply pin for CH1, CH2, and CH3 at "Power" stage
11	VO1(-)	Driver CH1 - Negative output
12	VO1(+)	Driver CH2 - Positive output
13	VO2(-)	Driver CH2 - Negative output
14	VO2(+)	Driver CH2 - Positive output
15	VO3(+)	Driver CH2 - Positive output
16	VO3(-)	Driver CH2 - Negative output
17	VO4(+)	Driver CH4 - Positive output
18	VO4(-)	Driver CH4 - Negative output
19	POWVCC2	Power supply pin for CH4 at "Power" stage
20	GND	Ground pin
21	CNT	Control pin
22	LDIN	Loading input
23	OPOUTSL	Output pin for preamplifier for thread
24	OPINSL	Input pin for preamplifier for thread
25	OPOUT3	CH3 preamplifier output pin
26	OPIN3(-)	Input pin for inverting input for CH3 preamplifier
27	OPIN3(+)	Input pin for non-inverting input for CH3 preamplifier
28	PREVCC	PreVcc

BA5996FM

● **Pin Functions (PE5269A)**

Pin No.	Pin Name	I/O	Format	Function and Operation
1	FTXD	O	C	For rewriting Flash EP-ROM (sending signals)
2	NC			Open
3	BSI	I		Input of P-Bus serial data
4	BSO	O	C	Output of P-Bus serial data
5	$\overline{\text{BSCK}}$	I/O	/C	Input/output of P-Bus serial clock
6, 7	DFS1, 2	O	C	Output 1, 2 of settings of DA I/F IC sampling frequency
8	DCKS	O	C	Output for selection of DA I/F IC clock subharmonic number
9	EVDD			Positive power supply for E power
10	EVSS			Potential of GND of E power
11	NC			Open
12	DCOPY	O	C	Output of settings of DA I/F IC copy flag
13	$\overline{\text{CRST}}$	O	C	Output of reset control of Compression IC
14-16	CBANK0-2	O	C	Output 0-2 of bank settings of Compression IC
17	$\overline{\text{EMPH}}$	O	C	Output of information on emphasis
18	DSPMUTE	O	C	Output of DOUT Mute
19	DSET	O	C	Output for lighting the disc set indicator
20	$\overline{\text{ADENA}}$	O	C	Output of control of A/D reference voltage supply
21	IC/VPP			IC: connected directly to VSS / VPP: Pull-down
22	BRXEN	I/O	/C	P-Bus receiving enabled
23	$\overline{\text{BSRQ}}$	I/O	/C	Request for P-Bus service request
24	$\overline{\text{XTALEN1}}$	O	C	Output of permission to oscillate CD LSI 16.9344MHz
25	$\overline{\text{XTALEN2}}$	O	C	Output of permission to oscillate CD LSI 24.576MHz
26	$\overline{\text{XRST}}$	O	C	Output of control of CD LSI reset
27	VDCONT	O	C	Output of control of VD power supply
28	CD3VON	O	C	Output of control of CD +3.3V power supply
29	CONT	O	C	Output of control of power supply to servo driver
30	$\overline{\text{XWAIT}}$	I		Input of control signals of CD LSI wait
31	LOEJ	O	C	Output for switching between LOAD/EJECT directions
32	CLCONT	O	C	Output for switching between driver inputs
33	CDMUTE	O	C	Output of control of CD Mute
34	$\overline{\text{RESET}}$	I		Input of system reset
35	XT1	I		Connected to the oscillator for subclock (connected to VSS via the resistor)
36	XT2			Connected to the oscillator for subclock (Open)
37	REGC			Connected to the capacity stabilizing output of the regulator (an electrolytic capacitor of about 1μF)
38	X2			Connected to the oscillator for the main clock
39	X1	I		Connected to the oscillator for the main clock
40	VSS			Potential of GND
41	VDD			Positive power supply (5V)
42	CLKOUT	O	C	Output of internal system clock (Open)
43	$\overline{\text{XWRITE}}$	O		Output of control signals of CD LSI light
44	$\overline{\text{UBEN}}$	O		Not used (Open)
45	WR/W	O		Output of Read/Write control signals of WMA decoder
46	$\overline{\text{XREAD}}$	O		Output of read control signals of CD LSI
47	XASTB	O		Output of CD LSI address strobe
48	LOCK	I		Input of spindle lock
49	$\overline{\text{WRST}}$	O	C	Output for reset control of WMA decoder
50-57	AD0-7	I/O	/C	Address/Data Bus 0-7
58	BVDD			B power supply, positive supply (3.3V)
59	BVSS			B power supply, potential of GND
60-67	AD8-15	I/O	/C	Address/Data Bus 8-15
68	$\overline{\text{XCS}}$	O	C	Output for chip selection of CD LSI
69	$\overline{\text{WCS}}$	O	C	Output for chip selection of WMA decoder
70, 71	DBBWRDY0, 1	I		Input of write-ready flag with WMA decoder DBBI0, 1
72, 73	DBBRRDY0, 1	I		Input of read-ready flag with WMA decoder DBBO0, 1
74	AVDD			A power supply, positive supply (5V)
75	AVSS			A power supply, potential of GND

Pin No.	Pin Name	I/O	Format	Function and Operation
76	AVREF			Input of reference voltage for A/D converter
77	VDSENS			Input of sensing short of VD power supply
78	DSCSNS			Input of sensing disc status
79	TEMP			Input of sensing information on temperature
80	HOME	I		Input of sensing Home SW
81	$\overline{\text{CSENS}}$	I		Input of sensing the flap closed
82-85	NC			Connected to AVDD or AVSS via the resistor
86	WMAARI	I		Input of sensing existence of WMA decoder & DA I/F IC
87	DRAMARI	I		Input of sensing existence of external DRAM for CD LSI
88	$\overline{\text{TESTIN}}$	I		Input with starting test program for checking chips
89	NC			Connected to EVDD or EVSS via the resistor
90	$\overline{\text{XINT}}$			Input of interruption signals of CD LSI
91	$\overline{\text{WINT}}$			Input of interruption signals of WMA decoder
92	$\overline{\text{BRST}}$	I		Input of reset of P-Bus
93	$\overline{\text{EJSW}}$	I		Input of Eject key
94-96	NC			Open
97	ROMDATA	I/O	/C	Input/output of E2PROM data
98	ROMCS	O	C	Output for chip selection of E2PROM
99	ROMCK	O	C	Output of clock of E2PROM
100	FRXD	I		For rewriting Flash EP-ROM (receiving signals)

*PE5269A

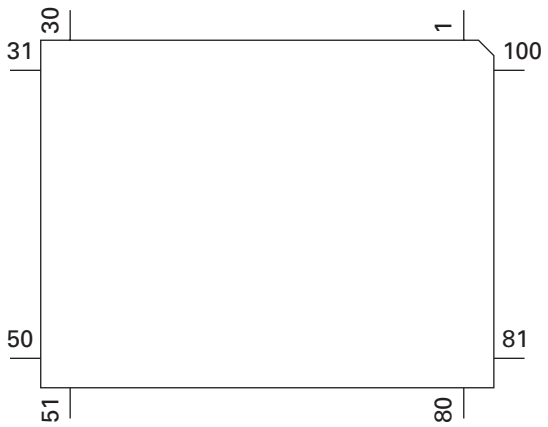

Format	Meaning
C	C MOS

*S-818A33AUC-BGN

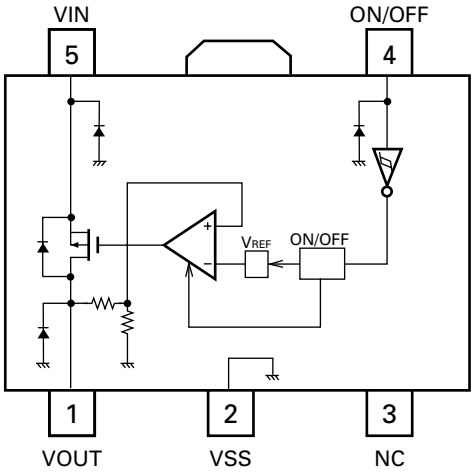

BA25BC0WFP

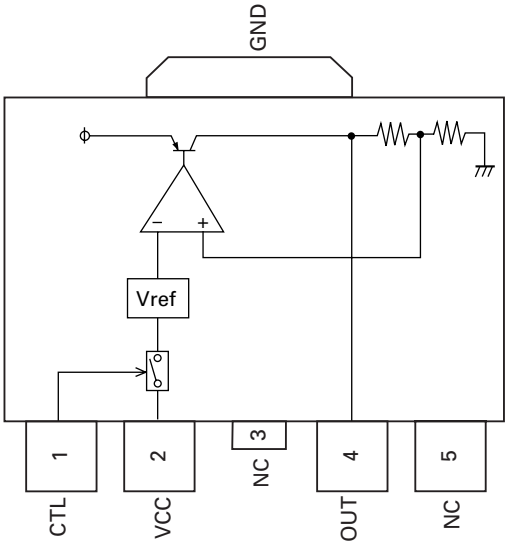

*PD9023A

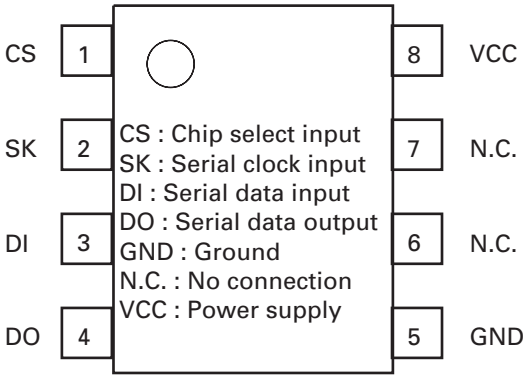

● **Pin Function (UPD61002GC)**

Pin No.	Pin Name	I/O	Function and Operation
1	VDD3	I/O	Power supply (3.3V)
2-4	NC		Not used
5	GND3		GND
6,7	NC		Not used
8	DO0	O	PCM output data
9	VDD2		Power supply (2.5V)
10	CKI	I	Clock input
11	DVDD		Power supply (PLL) (Digital)
12	AVDD		Power supply (PLL) (Analog)
13	AGND		GND (PLL) (Analog)
14	DGND		GND (PLL) (Digital)
15	VDD3I		Interface terminal protection
16	LRCKO	O	PCM output LRCK
17	BCKO	O	PCM output bit clock
18	NC		Not used
19	VDD3		Power supply (3.3V)
20	GND2		GND
21	MCK44	I	Audio master clock input
22	MCK48	I	Audio master clock input
23,24	P10, 11	I/O	Port
25	VDD2		Power supply (2.5V)
26	GND3		GND
27-32	P12-17	I/O	Port
33	VDD2		Power supply (2.5V)
34	P00/INTP00	I/O	Port
35,36	NC		Not used
37	P03/INTP03	I/O	Port
38	P04/INTP04	I/O	Port
39	P05/INTP05	I/O	Port
40	GND2		GND
41,42	P06, 07	I/O	Port
43	VDD3		Power supply (3.3V)
44-49	HAD0-5	I/O	Host address / Data bus
50	GND3		GND
51	VDD3		Power supply (3.3V)
52-55	HAD6-9	I/O	Host address / Data bus
56	GND3		GND
57-59	HAD10-12	I/O	Host address / Data bus
60	VDD2		Power supply (2.5V)
61-63	HAD13-15	I/O	Host address / Data bus
64	VDD3		Power supply (3.3V)
65	HAST	I	Host address strobe
66	HCSB	I	Host chip select
67	HR/WB	I	Host read / Write status
68	HDSTB	I	Host data strobe
69	GND2		GND
70	NC		Not used
71	EXTDIR	I	Bus direction flag from external
72,73	DBBWRDY0, 1	O	DBB write ready flag
74	DBBRRDY0	O	DBB read ready flag
75	VDD2		Power supply (2.5V)
76	GND3		GND
77	DBBRRDY1	O	DBB read ready flag
78	GND3		GND
79	RESETB	I	Reset
80	GND3		GND
81	VDD3		Power supply (3.3V)
82	GND3		GND
83	PLLCONT	I	PLL control
84	GND3		GND

Pin No.	Pin Name	I/O	Function and Operation
85	NC		Not used
86	GND2		GND
87	DI3	I	PCM input data
88	LRCKI3	I	PCM input LRCK
89	BCKI3	I	PCM input bit clock
90	DI2	I	PCM input data
91	LRCKI2	I	PCM input LRCK
92	BCKI2	I	PCM input bit clock
93	DI1	I	PCM input data
94	LRCKI1	I	PCM input LRCK
95	BCKI1	I	PCM input bit clock
96	VDD2		Power supply (2.5V)
97	DI0	I	PCM input data
98	LRCKI0	I	PCM input LRCK
99	BCKI0	I	PCM input bit clock
100	GND2		GND

*UPD61002GC

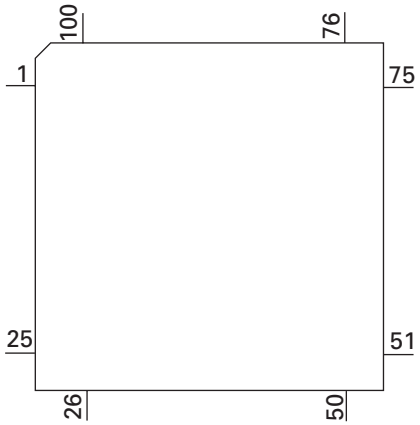

● FM/AM Tuner Unit

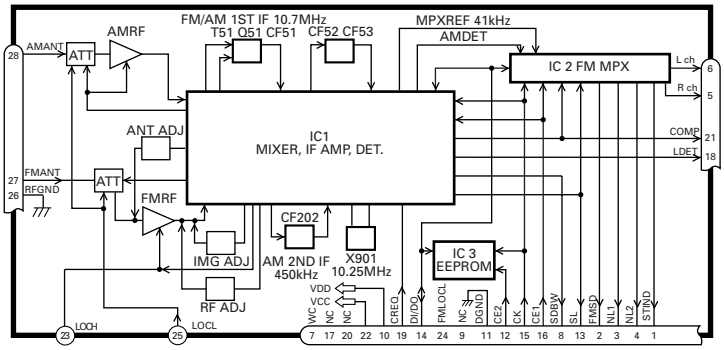

No.	Symbol	I/O	Explain	
1	STIND	O	stereo indicator	"Low" when the FM stereo signals are received. To be pulled up to the "VDD" at 47kΩ.
2	FMSD	O	FM station detector	"High" when signals are received. To be pulled up to the "VDD" at 47kΩ Meanwhile, 10kΩ should be used when taking diver FIX trigger from here and "High: 0.9VDD or more" and "Low: 250mV or less". (Should satisfy the diver IC specifications)
3	NL1	O	noise level-1	"High" when noise is received. Output for the RDS. GND at 47kΩ //1,800pF.
4	NL2	O	noise level-2	"High" when noise is received. Output for the RDS. GND at 36kΩ //330pF.
5	Rch	O	R channel output	FM stereo "R-ch" signal output or AM audio output. Add the specified de-emphasis constant.
6	Lch	O	L channel output	FM stereo "L-ch" signal output or AM audio output. Add the specified de-emphasis constant.
7	WC		write control	EEPROM write control. Writing permissible at "Low". Normally open.
8	SDBW	O	SD bandwidth	SD bandwidth signal output. For detection of detuning data for the RDS.
9	NC			Not used
10	VDD		power supply	Power supply pin for the digital section. DC 5V +/- 0.25V. Be careful about overlapping noise in the logic section.
11	DGND		digital ground	Grounding for the digital section.
12	CE2	I	chip enable-2	EEPROM chip enable. Active a "Low" To be pulled up to the "VDD" at 47kΩ
13	SL	I/O	signal level	Received FM/AM signal level (strength) output. Connect the specified load resistor and capacitor (10k Ω + 39k Ω //4,700pF)
14	DI/DO	I/O	data input/ data output	Data input/Data output To be pulled up to the "VDD" at 47kΩ
15	CK	I	clock	Clock input To be pulled up to the "VDD" at 47kΩ
16	CE1	I	chip enable-1	AF·RF chip enable. Active at "High" To be grounded at 47kΩ
17	NC			Not used
18	LDET	O	lock detector	Active at "Low". To be pulled up to the "VDD" at 47kΩ
19	CREQ	I	current request	Active at "Low". To be grounded at 47kΩ
20	NC			Not used
21	COMP	O	composite signal	FM composite signal output. r out < 100Ω
22	VCC		power supply	Analog section power supply pin.DC 8.4V +/- 0.3V
23	LOCH	I	local high	FM local high pin. When seeking local high, apply 5V together with "LOCL".
24	FMLOCL	I	FM local low	FM local low pin. When seeking local low, apply 5V to the base of the NPN transistor with which the specified resistor is being connected to the emitter. Keep it open in case of ordinary marketed models.
25	LOCL	I	local low	FM/AM local low pin. When seeking local low, apply 5V to the base of the NPN transistor. Since this pin is exclusive for AM when the FMLOCL is in use, do not drive it under FM.
26	RFGND		RF ground	Grounding for the antenna section.
27	FMANT	I	FM antenna input	FM antenna input. 75Ω. Surge absorber (DSP-201M-S00B) is necessary.
28	AMANT	I	AM antenna input	AM antenna input. High impedance. Connect to the antenna through an L (LAU type) of 4.7μH.To cope with the power transmission line hums, insert a series circuit consisting of an L (a coil of about 100mH) + R (a resistor of 470 Ω to 2.2kΩ) between the GND.

7.2.2 DISPLAY

● **CAW1704**

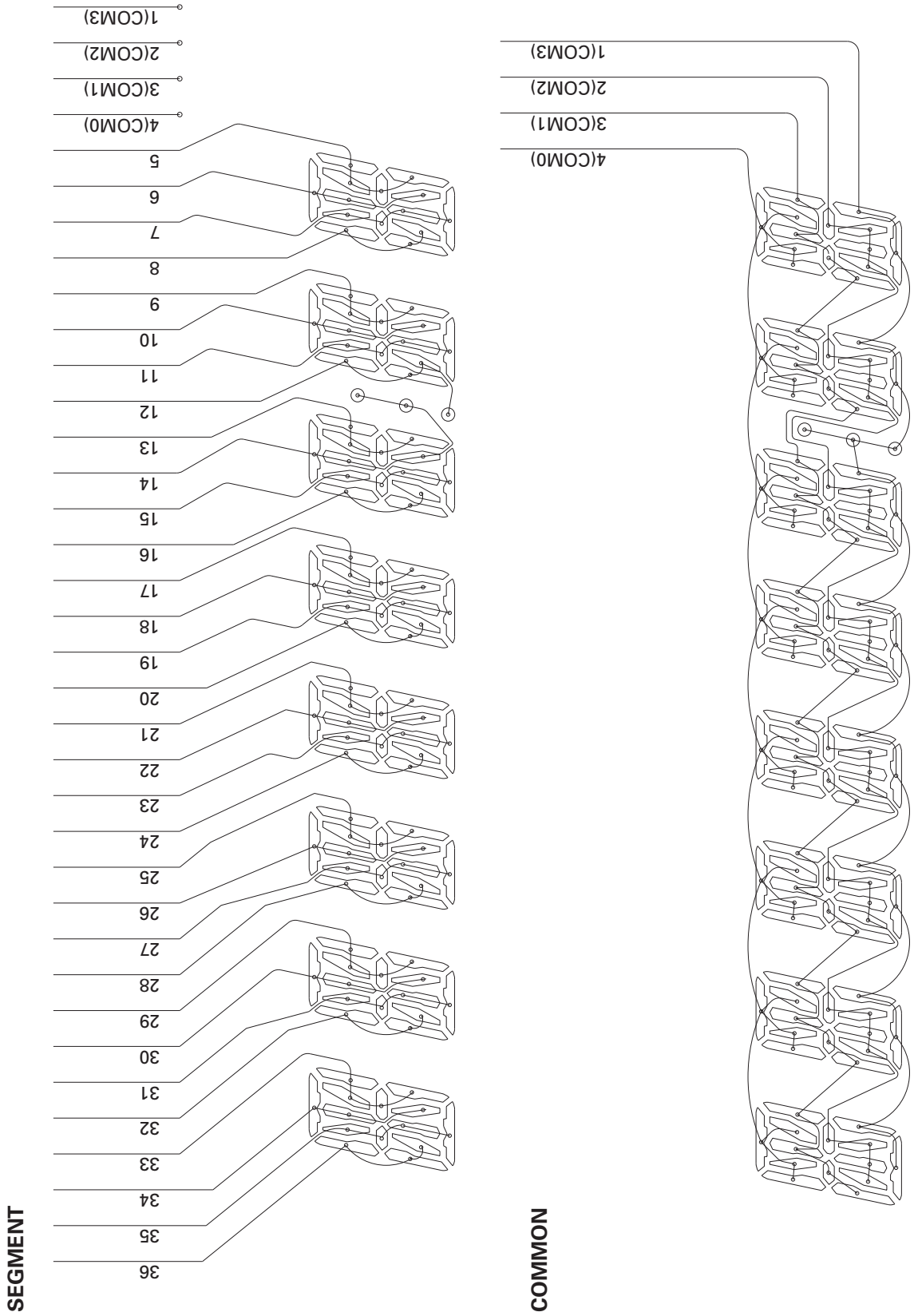

7.3 OPERATIONAL FLOW CHART

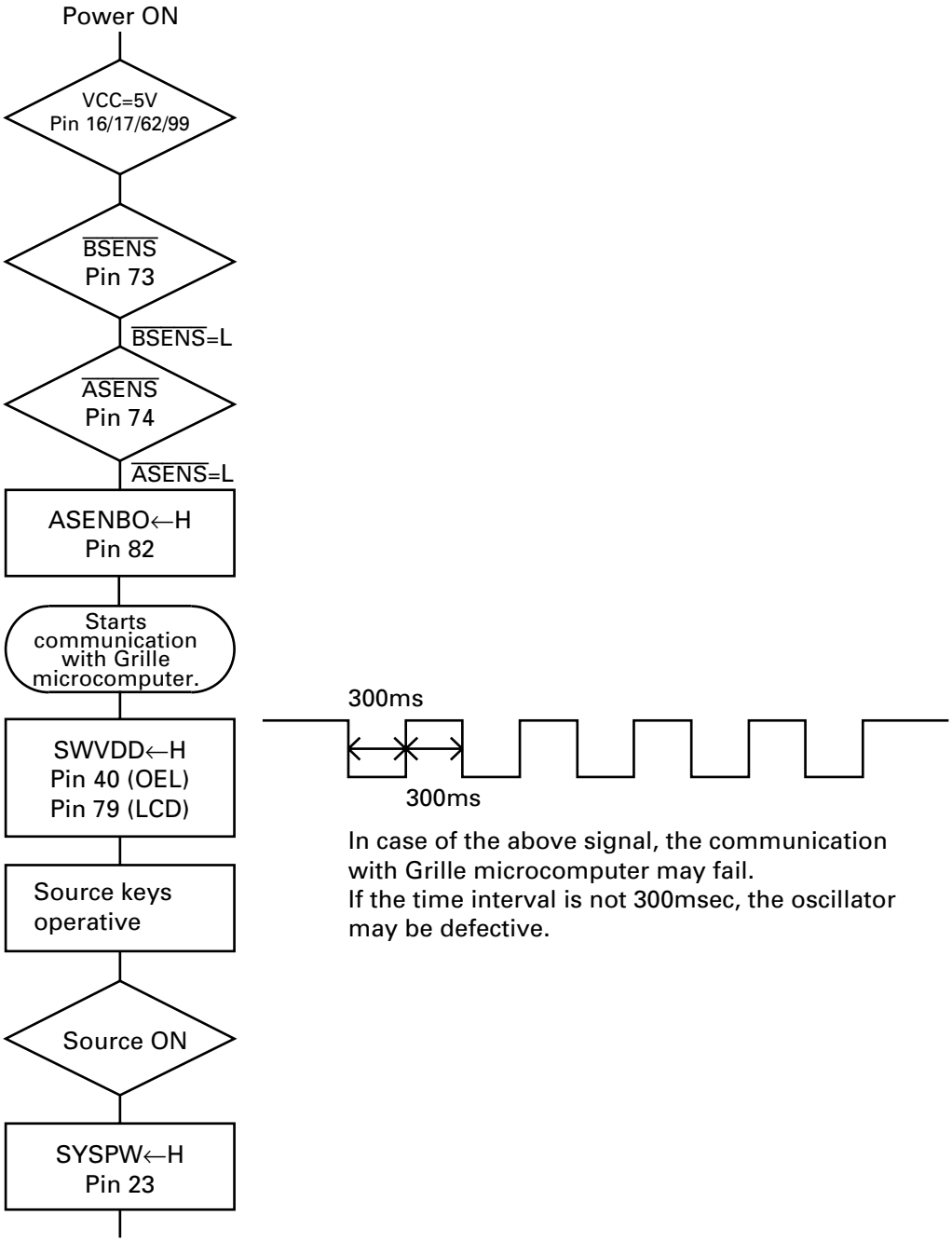

Completes power-on operation.
(After that, proceed to each source operation)

7.4 CLEANING

Before shipping out the product, be sure to clean the following portions by using the prescribed cleaning tools:

Portions to be cleaned	Cleaning tools
CD pickup lenses	Cleaning liquid : GEM1004 Cleaning paper : GED-008

8. OPERATIONS AND SPECIFICATIONS

8.1 OPERATIONS

HEAD UNIT

● CLOSE POSITION

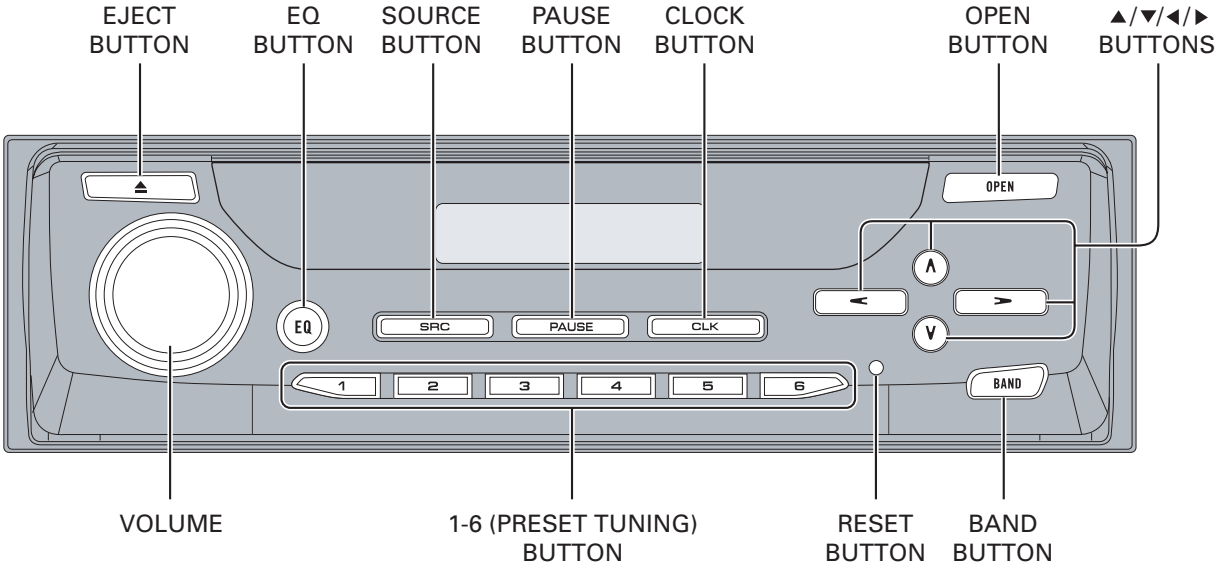

● OPEN POSITION

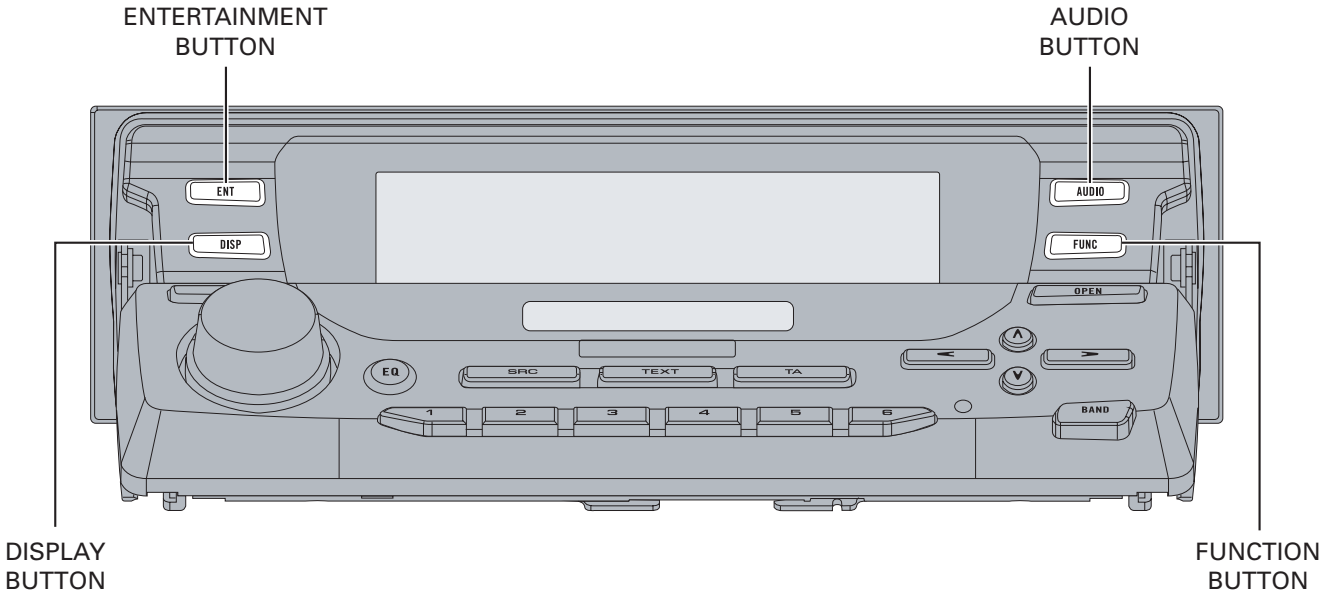

REMOTE CONTROL ASSY

● DEH-P840MP/XN/UC, P8450MP/XN/ES

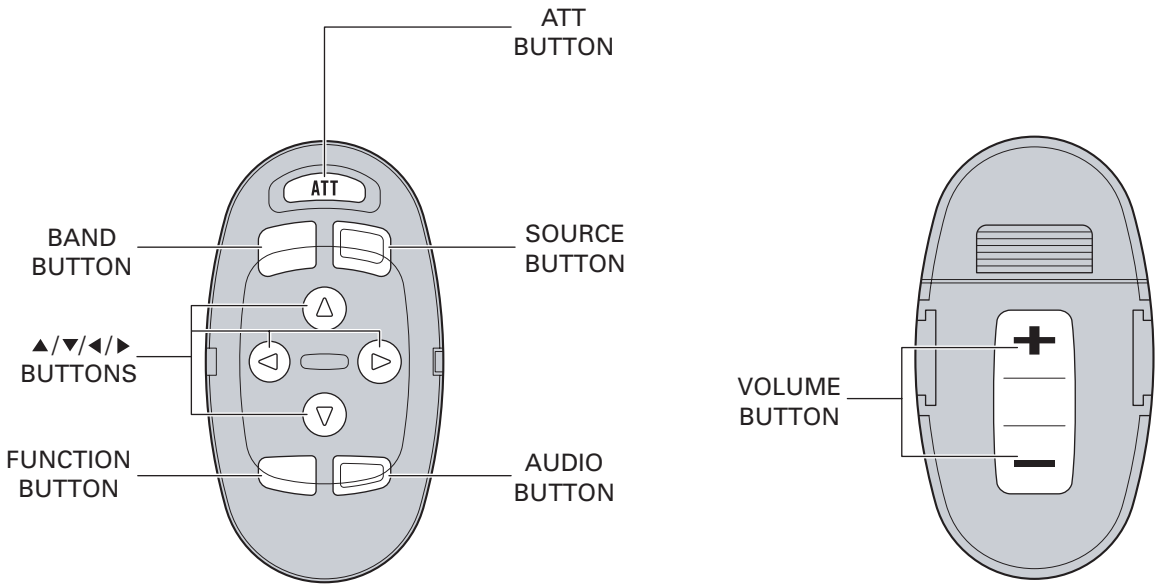

REMOTE CONTROL UNIT

● DEH-P8400MP/XN/UC

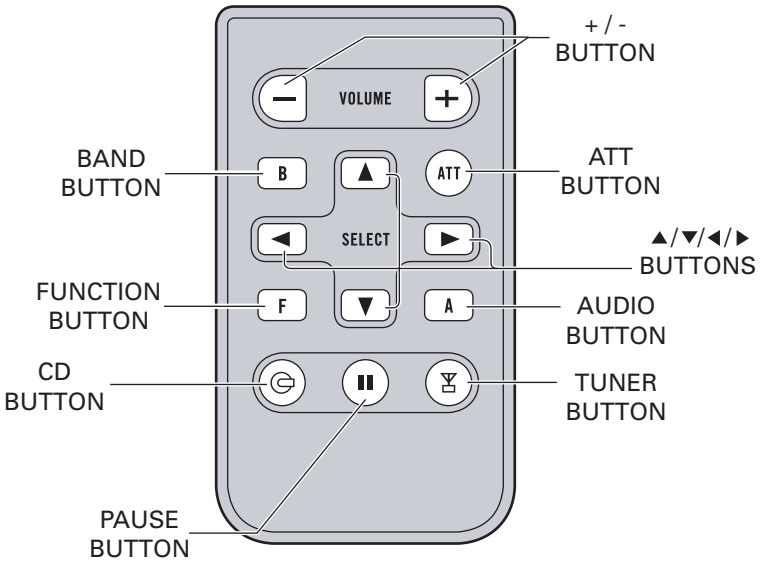

CONNECTION DIAGRAM

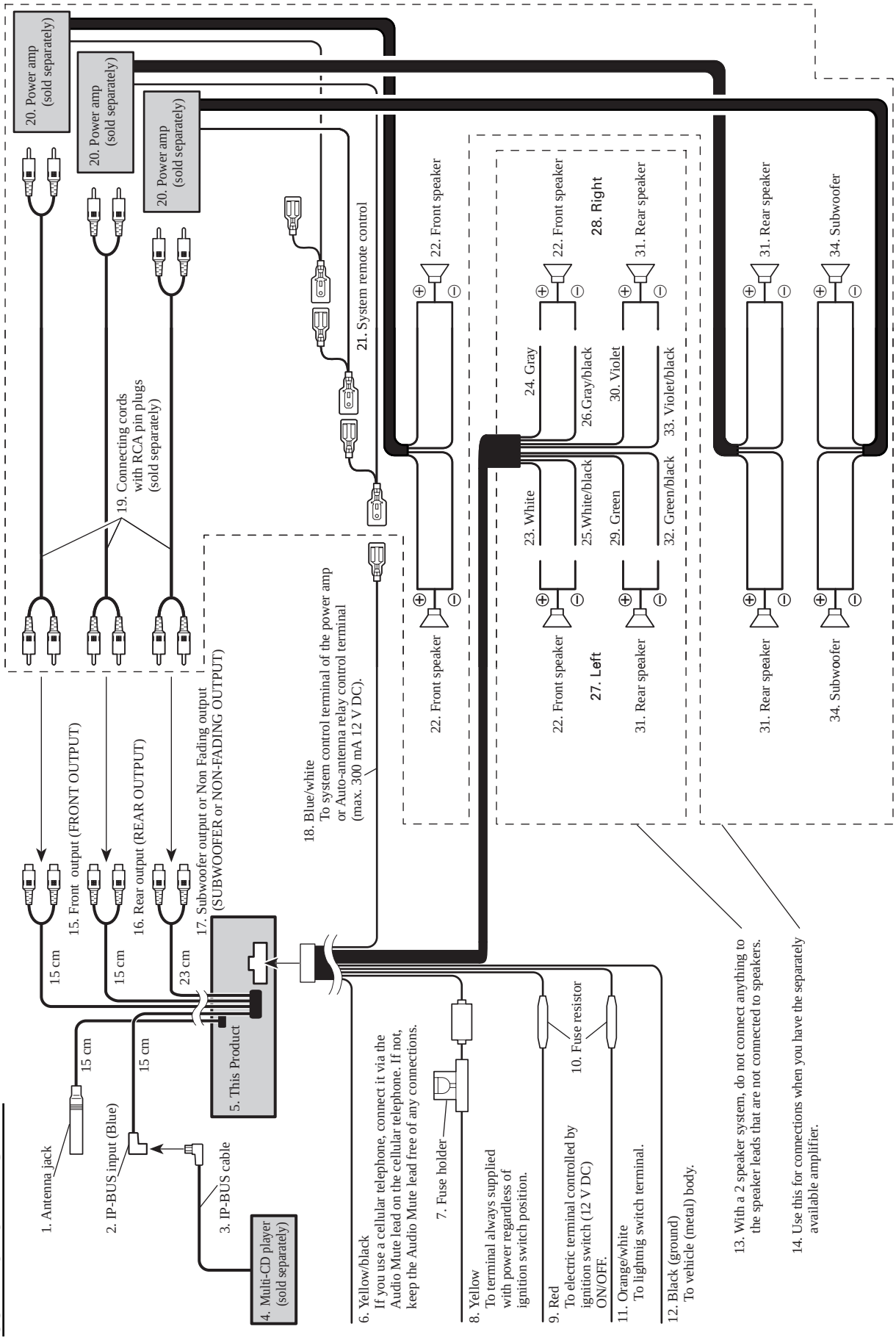

8.2 SPECIFICATIONS

● DEH-P840MP/XN/UC

Specifications

General

Power source ..... 14.4 V DC
(10.8 – 15.1 V allowable)
Grounding system ..... Negative type
Max. current consumption
..... 10.0 A
Backup current ..... 5mA or less

Dimensions (W x H x D):
(When closed)
(DIN) Chassis ..... 178 x 50 x 157 mm
[7 x 2 x 6-1/8 in]
Nose ..... 188 x 58 x 28 mm
[7-3/8 x 2-1/4 x 1-1/8 in]
(D) Chassis ..... 178 x 50 x 162 mm
[7 x 2 x 6-3/8 in]
Nose ..... 170 x 44 x 23 mm
[6-3/4 x 1-3/4 x 7/8 in]
(When opened)
(DIN) Chassis ..... 178 x 50 x 157 mm
[7 x 2 x 6-1/8 in]
Nose ..... 188 x 68 x 50 mm
[7-3/8 x 2-5/8 x 2 in]
(D) Chassis ..... 178 x 50 x 162 mm
[7 x 2 x 6-3/8 in]
Nose ..... 170 x 64 x 45 mm
[6-3/4 x 2-1/2 x 1-3/4 in]
Weight ..... 1.7 kg (3.74 lbs.)

Audio

Continuous power output is 22 W per channel min. into 4 ohms, both channels driven 50 to 15,000 Hz with no more than 5% THD.
Maximum power output 50 W x 4
for subwoofer (70 W x 1 ch/2 Ω)
Load impedance ..... 4 Ω (4 – 8 Ω [2 Ω for 1 ch]
allowable)
Preout max output level/output impedance
..... 4 V/1 kΩ
Equalizer (3-Band Parametric Equalizer):
(Low)
Frequency ..... 40/80/100/160 Hz
Q Factor 0.35/0.59/0.95/1.15
(+6 dB when boosted)
Gain ..... ±12 dB
(Mid)
Frequency ..... 200/500/1 k/2 k Hz
Q Factor 0.35/0.59/0.95/1.15
(+6 dB when boosted)
Gain ..... ±12 dB
(High)
Frequency ..... 3.15 k/8 k/10 k/12.5 k Hz
Q Factor 0.35/0.59/0.95/1.15
(+6 dB when boosted)
Gain ..... ±12 dB
Loudness contour:
(Low) ..... +3.5 dB (100 Hz)
+3 dB (10 kHz)
(Mid) ..... +10 dB (100 Hz)
+6.5 dB (10 kHz)
(High) ..... +11 dB (100 Hz)
+11 dB (10 kHz)
(Volume: –30 dB)
Tone controls:
(Bass)
Frequency ..... 40/63/100/160 Hz
Gain ..... ±12 dB
(Treble)
Frequency ..... 2.5 k/4 k/6.3 k/10 k Hz
Gain ..... ±12 dB
HPF:
Frequency ..... 50/80/125 Hz
Slope ..... –12 dB/oct
Subwoofer:
Frequency ..... 50/80/125 Hz
Slope ..... –18 dB/oct
Gain ..... ±12 dB
Phase ..... Normal/Reverse

CD player

System ..... Compact disc audio
system
Usable discs ..... Compact disc
Signal format:
Sampling frequency 44.1 kHz
Number of quantization bits
..... 16; linear
Frequency characteristics
..... 5 – 20,000 Hz (±1 dB)
Signal-to-noise ratio ..... 94 dB (1 kHz)
(IHF-A network)
Dynamic range ..... 92 dB (1 kHz)
Number of channels ..... 2 (stereo)
MP3 decoding format ..... MPEG-1&2 Audio Layer-3
WMA decoding format.... Ver. 7 & 8

FM tuner

Frequency range ..... 87.9 – 107.9 MHz
Usable sensitivity ..... 9 dBf (0.8 μV/75 Ω, mono,
S/N:30 dB)
50 dB quieting sensitivity 15 dBf (1.5 μV/75 Ω, mono)
Signal-to-noise ratio ..... 70 dB (IHF-A network)
Distortion ..... 0.3% (at 65 dBf, 1 kHz,
stereo)
Frequency response ..... 30 – 15,000 Hz (± 3 dB)
Stereo separation ..... 40 dB (at 65 dBf, 1 kHz)
Selectivity ..... 70 dB
Three signal intermodulation
(Desire signal level) . 30 dBf
(two undesire signal level: 100 dBf)

AM tuner

Frequency range ..... 530 – 1,710 kHz (10 kHz)
Usable sensitivity ..... 18 μV (S/N: 20 dB)
Selectivity ..... 50 dB (± 10 kHz)

Note

- Specifications and the design are subject to possible modifications without notice due to improvements. ■

● DEH-P8400MP/XN/UC

Specifications

General

Power source ..... 14.4 V DC
(10.8 – 15.1 V allowable)
Grounding system ..... Negative type
Max. current consumption
..... 10.0 A
Backup current ..... 5mA or less

Dimensions (W x H x D):
(When closed)
(DIN) Chassis ..... 178 x 50 x 157 mm
[7 x 2 x 6-1/8 in]
Nose ..... 188 x 58 x 28 mm
[7-3/8 x 2-1/4 x 1-1/8 in]
(D) Chassis ..... 178 x 50 x 162 mm
[7 x 2 x 6-3/8 in]
Nose ..... 170 x 44 x 23 mm
[6-3/4 x 1-3/4 x 7/8 in]
(When opened)
(DIN) Chassis ..... 178 x 50 x 157 mm
[7 x 2 x 6-1/8 in]
Nose ..... 188 x 68 x 50 mm
[7-3/8 x 2-5/8 x 2 in]
(D) Chassis ..... 178 x 50 x 162 mm
[7 x 2 x 6-3/8 in]
Nose ..... 170 x 64 x 45 mm
[6-3/4 x 2-1/2 x 1-3/4 in]
Weight ..... 1.7 kg (3.74 lbs.)

Audio

Continuous power output is 22 W per channel min. into 4 ohms, both channels driven 50 to 15,000 Hz with no more than 5% THD.
Maximum power output 50 W x 4
for subwoofer (70 W x 1 ch/2 Ω)
Load impedance ..... 4 Ω (4 – 8 Ω [2 Ω for 1 ch]
allowable)
Preout max output level/output impedance
..... 4 V/1 kΩ
Equalizer (3-Band Parametric Equalizer):
(Low)
Frequency ..... 40/80/100/160 Hz
Q Factor 0.35/0.59/0.95/1.15
(+6 dB when boosted)
Gain ..... ±12 dB
(Mid)
Frequency ..... 200/500/1 k/2 k Hz
Q Factor 0.35/0.59/0.95/1.15
(+6 dB when boosted)
Gain ..... ±12 dB
(High)
Frequency ..... 3.15 k/8 k/10 k/12.5 k Hz
Q Factor 0.35/0.59/0.95/1.15
(+6 dB when boosted)
Gain ..... ±12 dB
Loudness contour:
(Low) ..... +3.5 dB (100 Hz)
+3 dB (10 kHz)
(Mid) ..... +10 dB (100 Hz)
+6.5 dB (10 kHz)
(High) ..... +11 dB (100 Hz)
+11 dB (10 kHz)
(Volume: –30 dB)
Tone controls:
(Bass)
Frequency ..... 40/63/100/160 Hz
Gain ..... ±12 dB
(Treble)
Frequency ..... 2.5 k/4 k/6.3 k/10 k Hz
Gain ..... ±12 dB
HPF:
Frequency ..... 50/80/125 Hz
Slope ..... –12 dB/oct
Subwoofer:
Frequency ..... 50/80/125 Hz
Slope ..... –18 dB/oct
Gain ..... ±12 dB
Phase ..... Normal/Reverse

CD player

System ..... Compact disc audio
system
Usable discs ..... Compact disc
Signal format:
Sampling frequency 44.1 kHz
Number of quantization bits
..... 16; linear
Frequency characteristics
..... 5 – 20,000 Hz (±1 dB)
Signal-to-noise ratio ..... 94 dB (1 kHz)
(IHF-A network)
Dynamic range ..... 92 dB (1 kHz)
Number of channels ..... 2 (stereo)
MP3 decoding format ..... MPEG-1&2 Audio Layer-3
WMA decoding format.... Ver. 7 & 8

FM tuner

Frequency range ..... 87.9 – 107.9 MHz
Usable sensitivity ..... 9 dBf (0.8 μV/75 Ω, mono,
S/N:30 dB)
50 dB quieting sensitivity 15 dBf (1.5 μV/75 Ω, mono)
Signal-to-noise ratio ..... 70 dB (IHF-A network)
Distortion ..... 0.3% (at 65 dBf, 1 kHz,
stereo)
Frequency response ..... 30 – 15,000 Hz (± 3 dB)
Stereo separation ..... 40 dB (at 65 dBf, 1 kHz)
Selectivity ..... 70 dB
Three signal intermodulation
(Desire signal level) . 30 dBf
(two undesire signal level: 100 dBf)

AM tuner

Frequency range ..... 530 – 1,710 kHz (10 kHz)
Usable sensitivity ..... 18 μV (S/N: 20 dB)
Selectivity ..... 50 dB (± 10 kHz)

Note

- Specifications and the design are subject to possible modifications without notice due to improvements. ■

● DEH-P8450MP/XN/ES

Specifications

General

Power source ..... 14.4 V DC
(10.8 – 15.1 V allowable)
Grounding system ..... Negative type
Max. current consumption
..... 10.0 A
Backup current ..... 5mA or less

Dimensions (W x H x D):
(When closed)
(DIN) Chassis ..... 178 x 50 x 157 mm
Nose ..... 188 x 58 x 28 mm
(D) Chassis ..... 178 x 50 x 162 mm
Nose ..... 170 x 44 x 23 mm
(When opened)
(DIN) Chassis ..... 178 x 50 x 157 mm
Nose ..... 188 x 58 x 50 mm
(D) Chassis ..... 178 x 50 x 162 mm
Nose ..... 170 x 64 x 45 mm
Weight ..... 1.7 kg

Audio

Continuous power output is 22 W per channnel min. into 4 ohms, both channels driven 50 to 15,000 Hz with no more than 5% THD.
Maximum power output 50 W x 4
for subwoofer (70 W x 1 ch/2 Ω)
Load impedance ..... 4 Ω (4 – 8 Ω [2 Ω for 1 ch] allowable)
Preout max output level/output impedance
..... 4.0 V/1 kΩ
Equalizer (3-Band Parametric Equalizer):
(Low)
Frequency ..... 40/80/100/160 Hz
Q Factor 0.35/0.59/0.95/1.15
(+6 dB when boosted)
Gain ..... ±12 dB
(Mid)
Frequency ..... 200/500/1 k/2 k Hz
Q Factor 0.35/0.59/0.95/1.15
(+6 dB when boosted)
Gain ..... ±12 dB
(High)
Frequency ..... 3.15 k/8 k/10 k/12.5 k Hz
Q Factor 0.35/0.59/0.95/1.15
(+6 dB when boosted)
Gain ..... ±12 dB
Loudness contour:
(Low) ..... +3.5 dB (100 Hz)
+3 dB (10 kHz)
(Mid) ..... +10 dB (100 Hz)
+6.5 dB (10 kHz)
(High) ..... +11 dB (100 Hz)
+11 dB (10 kHz)
(Volume: –30 dB)
Tone controls:
(Bass)
Frequency ..... 40/63/100/160 Hz
Gain ..... ±12 dB
(Treble)
Frequency ..... 2.5 k/4 k/6.3 k/10 k Hz
Gain ..... ±12 dB
HPF:
Frequency ..... 50/80/125 Hz
Slope ..... –12 dB/oct
Subwoofer:
Frequency ..... 50/80/125 Hz
Slope ..... –18 dB/oct
Gain ..... ±12 dB
Phase ..... Normal/Reverse

CD player

System ..... Compact disc audio system
Usable discs ..... Compact disc
Signal format:
Sampling frequency 44.1 kHz
Number of quantization bits
..... 16; linear
Frequency characteristics
..... 5 – 20,000 Hz (±1 dB)
Signal-to-noise ratio ..... 94 dB (1 kHz)
(IEC-A network)
Dynamic range ..... 92 dB (1 kHz)
Number of channels ..... 2 (stereo)
MP3 decoding format ..... MPEG-1&2 Audio Layer-3
WMA decoding format ... Ver. 7 & 8

FM tuner

Frequency range ..... 87.5 – 108 MHz
Usable sensitivity ..... 9 dBf (0.8 μV/75 Ω, mono, S/N:30 dB)
50 dB quieting sensitivity 15 dBf (1.5 μV/75 Ω, mono)
Signal-to-noise ratio ..... 70 dB (IEC-A network)
Distortion ..... 0.3% (at 65 dBf, 1 kHz, stereo)
Frequency response ..... 30 – 15,000 Hz (± 3 dB)
Stereo separation ..... 40 dB (at 65 dBf, 1 kHz)

AM tuner

Frequency range ..... 530 – 1,640 kHz (10 kHz)
531 – 1,602 kHz (9 kHz)
Usable sensitivity ..... 18 μV (S/N: 20 dB)
Selectivity ..... 50 dB (±10 kHz)
50 dB (±9 kHz)

Infrared Remote Control

Wavelength ..... 940 nm ± 50 nm
Output ..... typ; 12 mw/sr per Infrared LED

Note

- Specifications and the design are subject to possible modifications without notice due to improvements. ■