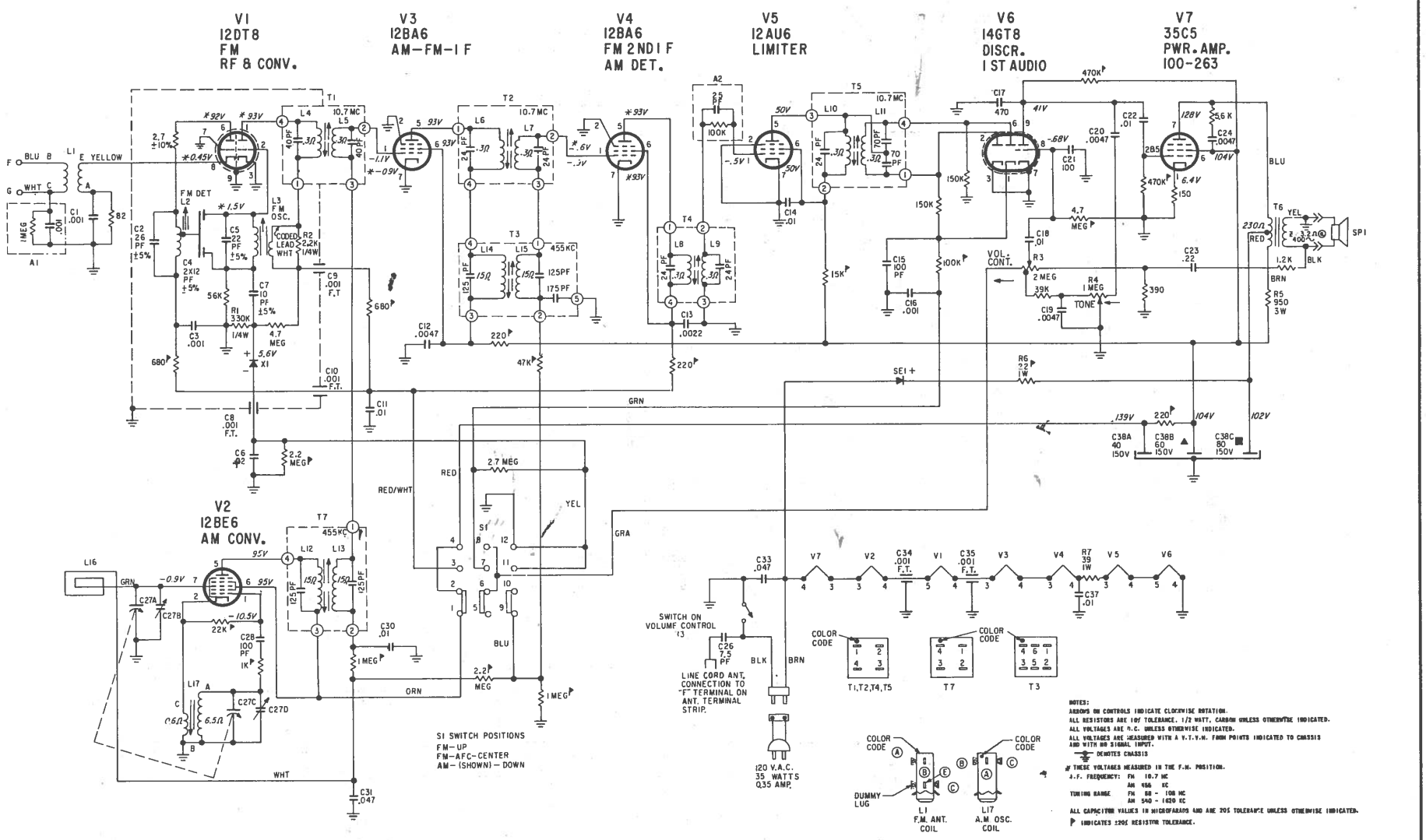

COURTESY OF ZENITH RADIO CORP.

ZENITH MODELS K725A/B/C/L/W (CH. 7K06Z)

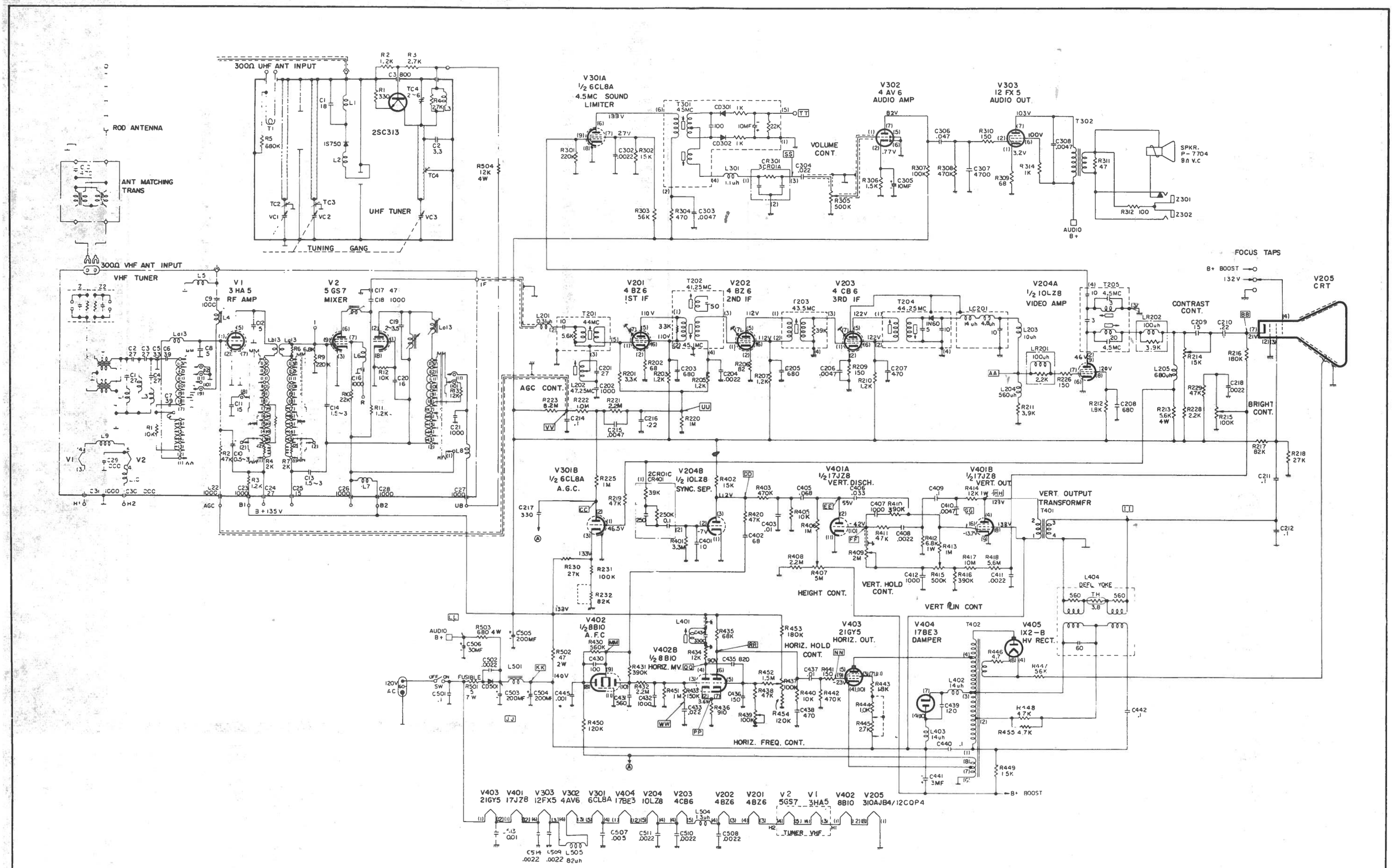

COURTESY OF WESTERN AUTO STORES

TRUETONE MODEL TAC3712B-76 (2DC3712)