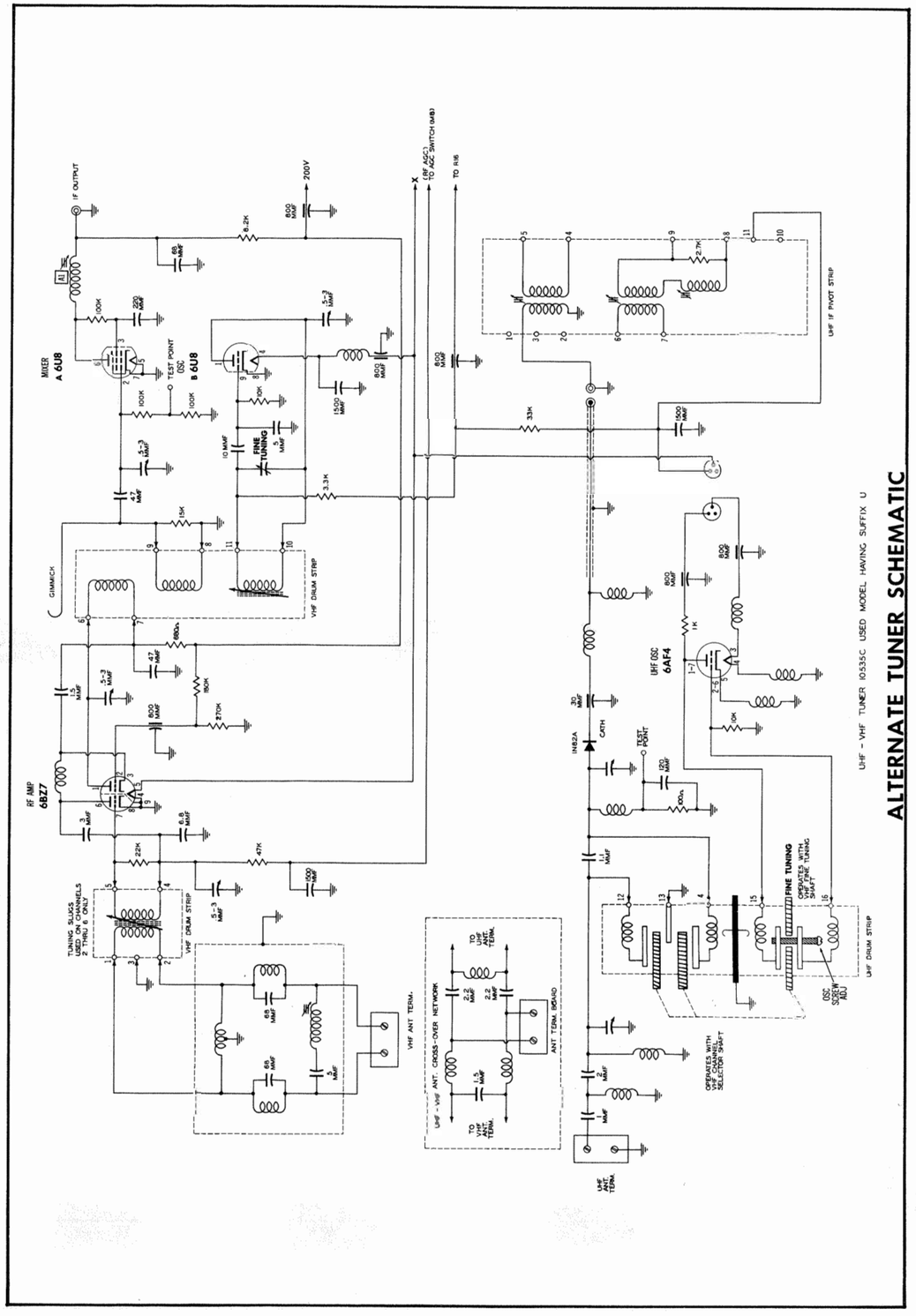

ALTERNATE TUNER SCHEMATIC

PHOTOFACT* Folder

*TRADE MARK

PACKARD-BELL
MODELS 17101, U, 17104, U, 21102, U, 21201, U, 21204, U (Ch. T-10)

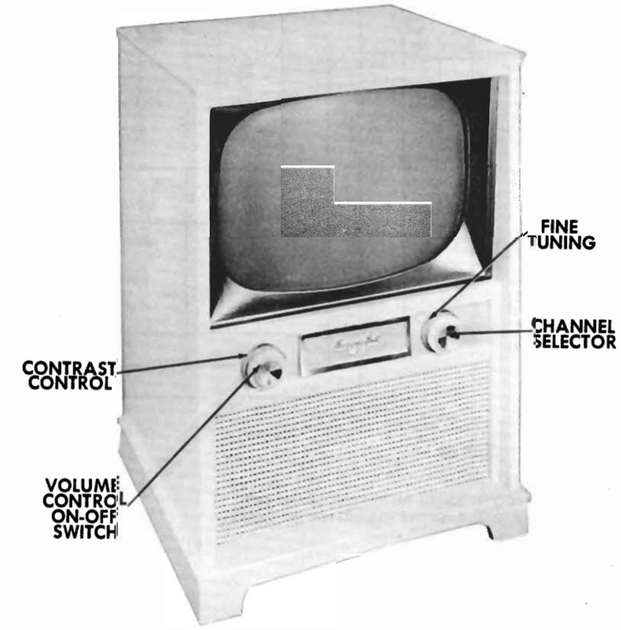

PACKARD-BELL
MODELS 17101, U, 17104, U,
21102, U, 21201, U, 21204, U (Ch. T-10)

PACKARD-BELL MODEL 21204

TRADE NAME	Packard-Bell	MODELS	CHASSIS
		17101, -U, 17104, -U, 21102, -U, 21201, -U, 21204, -U	T-10
MANUFACTURER	Packard-Bell Co., Service Div., 11th. & Hope Streets, Los Angeles 15, California		
TYPE SET	Television Receiver		
TUBES	Eighteen		
POWER SUPPLY	110-120 Volts AC-60 Cycles	RATING 1.38 Amp. @ 117Volts AC	
TUNING RANGE	Channels 2 thru 13 VHF, 14 thru 83 UHF, Video IF 45.75MC, Sound IF 41.25MC (Intercarrier)		

INDEX

Alignment Instruction 10
Disassembly Instructions 18
Horizontal Sweep Circuit Adjustments 11
Parts List and Descriptions 14, 15, 16
Photographs
Cabinet- Rear View 11
Capacitor Identification 4, 9
Chassis-Top View 3
RF Tuner 7
Resistor Identification 12, 17
Photographs (Cont)
Trans., Inductor & Alignment Identification ... 13
Resistance Measurements 8
Servicing in the Field 18
Schematic (Alternate Tuner) 19
Schematic (TV) 2
Trouble Shooting Aids 6, 7
Tube Failure Check Chart 5
Tube Placement Chart (Bottom View) 8
Tube Placement Chart (Top View) 5

HOWARD W. SAMS & CO., INC. • Indianapolis 5, Indiana

"The listing of any available replacement part herein does not constitute in any case a recommendation, warranty or guaranty by Howard W. Sams & Co., Inc., as to the quality and suitability of such replacement part. The numbers of these parts have been compiled from information furnished to Howard W. Sams & Co., Inc., by the manufacturers of the particular type of replacement part listed." "Reproduction or use, without express permission, of editorial or pictorial content, in any manner, is prohibited. No patent liability is assumed with respect to the use of the information contained herein. Copyright 1955 by Howard W. Sams & Co., Inc., Indianapolis 5, Indiana, U. S. of America. Copyright under International Copyright Union. All rights reserved under Inter-American Copyright Union (1910) by Howard W. Sams & Co., Inc." Printed in U. S. of America

DATE 4-55 SET 274 FOLDER 11

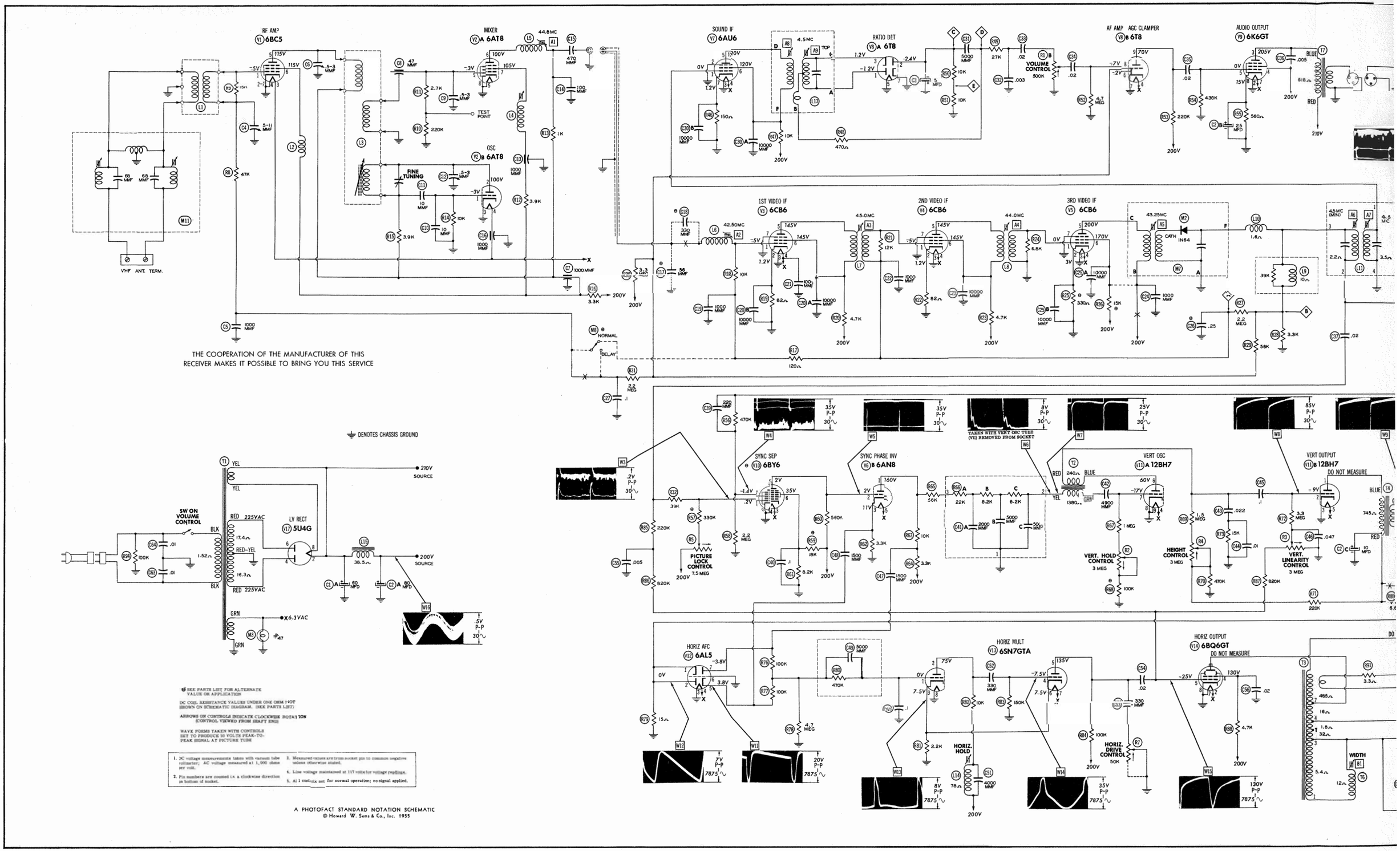
RF AMP V1 6BC5
MIXER V2 A 6AT8
OSC V2 B 6AT8
SOUND IF V7 6AU6
RATIO DET V8 A 6T8
AF AMP AGC CLAMPER V8 B 6T8
AUDIO OUTPUT V9 6K6GT
1ST VIDEO IF V3 6CB6
2ND VIDEO IF V4 6CB6
3RD VIDEO IF V5 6CB6
VHF ANT. TERM.
FINE TUNING
TEST POINT
VOLUME CONTROL 500K
NORMAL
DELAY
THE COOPERATION OF THE MANUFACTURER OF THIS RECEIVER MAKES IT POSSIBLE TO BRING YOU THIS SERVICE
DENOTES CHASSIS GROUND
SW ON VOLUME CONTROL
LV RECT V17 5U4G
210V SOURCE
200V SOURCE
6.3VAC
SYNC SEP V10 6BY6
SYNC PHASE INV V6 B 6AN8
PICTURE LOCK CONTROL 7.5 MEG
TAKEN WITH VERT OSC TUBE (V11) REMOVED FROM SOCKET
VERT OSC V11 A 12BH7
VERT OUTPUT V11 B 12BH7
DO NOT MEASURE
VERT. HOLD CONTROL 3 MEG
HEIGHT CONTROL 3 MEG
VERT. LINEARITY CONTROL 3 MEG
HORIZ AFC V12 6AL5
HORIZ MULT V13 6SN7GTA
HORIZ OUTPUT V14 6BQ6GT
HORIZ. HOLD
HORIZ. DRIVE CONTROL 50K
WIDTH
SEE PARTS LIST FOR ALTERNATE VALUE OR APPLICATION
DC COIL RESISTANCE VALUES UNDER ONE OHM NOT SHOWN ON SCHEMATIC DIAGRAM. (SEE PARTS LIST)
ARROWS ON CONTROLS INDICATE CLOCKWISE ROTATION CONTROL VIEWED FROM SHAFT END
WAVE FORMS TAKEN WITH CONTROLS SET TO PRODUCE 30 VOLTS PEAK-TO-PEAK SIGNAL AT PICTURE TUBE
1. DC voltage measurements taken with vacuum tube voltmeter; AC voltage measured at 1,000 ohms per volt.
2. Pin numbers are counted in a clockwise direction as bottom of socket.
3. Measured values are from socket pin to common negative unless otherwise stated.
4. Line voltage maintained at 117 volts for voltage readings.
5. All i contains are for normal operation; no signal applied.
A PHOTOFACT STANDARD NOTATION SCHEMATIC
© Howard W. Sams & Co., Inc. 1955

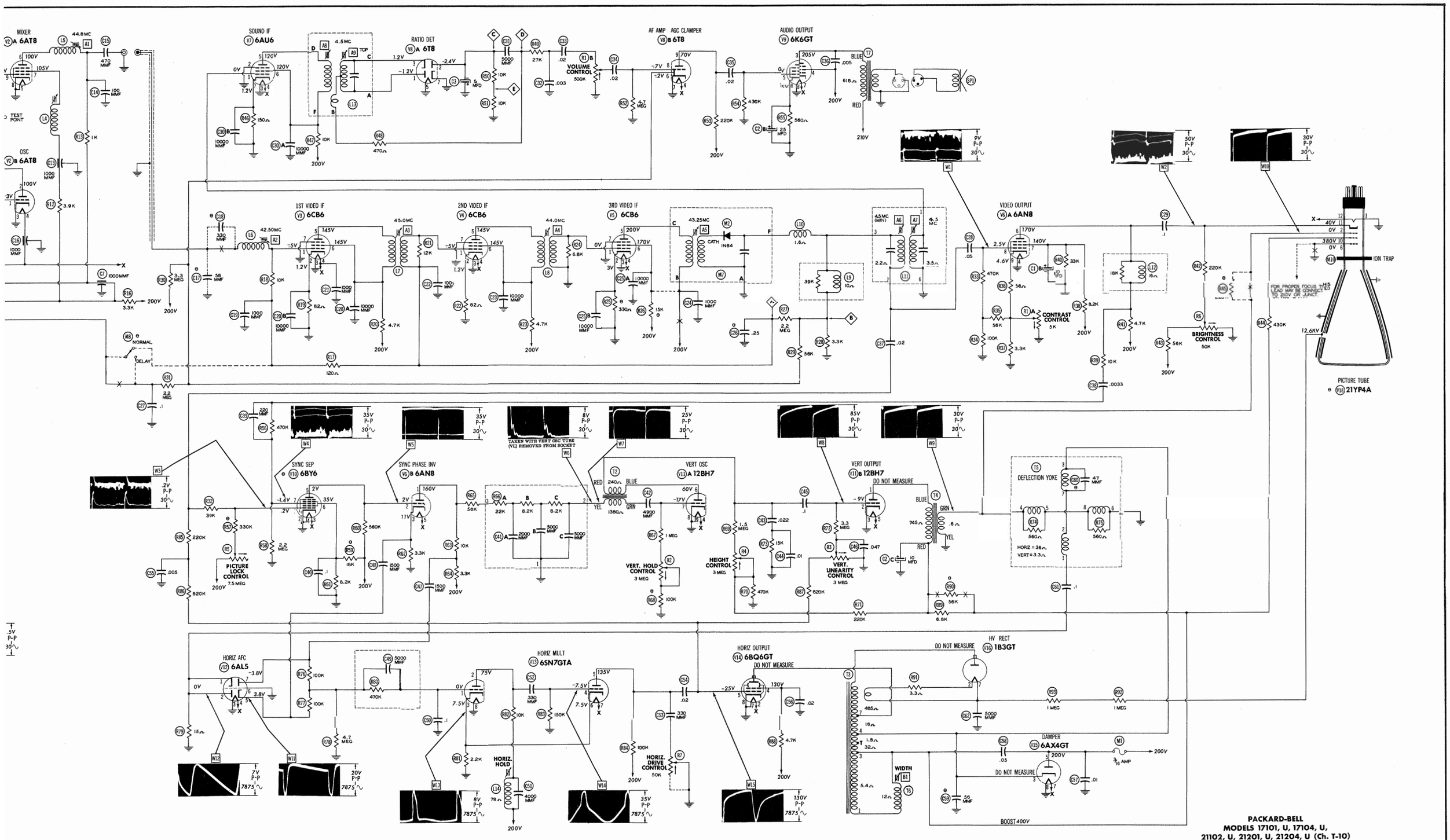

PACKARD-BELL
MODELS 17101, U, 17104, U,
21102, U, 21201, U, 21204, U (Ch. T-10)

PACKARD-BELL
MODELS 17101, U, 17104, U,
21102, U, 21201, U, 21204, U (Ch. T-10)

ALIGNMENT INSTRUCTIONS

ALIGNMENT INSTRUCTIONS—READ CAREFULLY BEFORE ATTEMPTING ALIGNMENT

The high voltage lead should be securely taped and kept away from the chassis. Do not remove the horizontal oscillator tube (V13) from its socket to disable the high voltage. Allow a 10 minute warm-up period for receiver and test equipment.

VIDEO IF ALIGNMENT

Do not connect a negative voltage to the AGC line.
Set generator output at maximum.

	DUMMY ANTENNA	SIGNAL GENERATOR COUPLING	SIGNAL GENERATOR FREQUENCY	CHANNEL	CONNECT VTVM	ADJUST	REMARKS
1	.001MFD	High side to ungrounded tube shield floating over mixer tube 6AT8 (V2A). Low side to chassis.	44.8MC	Any non-interfering channel.	DC probe to point A. Common to chassis.	A1	Adjust for maximum output.
2	"	"	42.50MC	"	"	A2	"
3	"	"	45.0MC	"	"	A3	"
4	"	"	44.0MC	"	"	A4	"
5	"	"	43.25MC	"	"	A5	"

OVERALL VIDEO IF RESPONSE CHECK

Connect the negative lead of a 5MFD, 50 volt capacitor to the ungrounded side of C26.
Connect positive lead to chassis.
Couple a second signal generator to an ungrounded tube shield floating over converter tube (V2) to provide marker on response curve.
Adjust signal generator output to develop approximately 4 volts of AGC.
Connect the synchronized sweep voltage from the sweep generator to the horizontal input of the oscilloscope for horizontal deflection.
The sweep generator output lead should be terminated with its characteristic impedance, usually 50 ohms.

	DUMMY ANTENNA	SWEEP GENERATOR COUPLING	SWEEP GENERATOR FREQUENCY	MARKER GENERATOR FREQUENCY	CHANNEL	CONNECT SCOPE	ADJUST	REMARKS
6	Two 120Ω carbon resistors	Across antenna terminals with 120Ω in each lead.	63MC (10MC Swp)	41.25MC 42.25MC 45.0MC 45.75MC	3	Vert. amp. thru 22KΩ to point B. Low side to chassis.		Check for response similar to Fig. 1. Adjust A2 for the overall bandwidth. Adjust A1 to place the 45.75MC at 50% on response curve. Adjust A3 for the position of the 45.0MC marker on response curve. Adjust A4 to place 41.25MC marker in position and to correct bottom portion of response curve. A5 controls position of curve on low frequency side. Note position of 45.0MC marker on response curve. It should not exceed this position.

4.5MC TRAP ALIGNMENT

If 4.5MC signal generator of crystal accuracy capable of at least one volt output is not available tune in a TV station and adjust A6 for MINIMUM 4.5MC beat interference in the picture.
Adjust contrast control fully clockwise. Remove the 3rd. video IF tube (V5) from its socket.

	DUMMY ANTENNA	SIGNAL GENERATOR COUPLING	SIGNAL GENERATOR FREQUENCY	CHANNEL	CONNECT VTVM	ADJUST	REMARKS
7	.001MFD	High side to point B. Low side to chassis.	4.5MC (Unmod)	Any	DC probe thru detector (Fig. 2) to pin 11 (cathode) of picture tube. Common to chassis.	A6	Adjust for MINIMUM deflection with signal generator output at least 1 volt.

SOUND IF ALIGNMENT USING AM SIGNAL GENERATOR AND VTVM

Remove the third video IF tube (V5) from its socket.

	DUMMY ANTENNA	SIGNAL GENERATOR COUPLING	SIGNAL GENERATOR FREQUENCY	CHANNEL	CONNECT VTVM	ADJUST	REMARKS
8	.001MFD	High side to point B. Low side to chassis.	4.5MC (Unmod)	Any	DC probe to point C. Common to chassis.	A7, A8	Adjust for maximum deflection.
9	"	"	"	"	DC probe to point D. Common to point E.	A9	Adjust for zero reading. A positive and negative reading will be obtained on either side of the correct setting. Replace V5 in its socket.

SOUND IF ALIGNMENT USING FM SIGNAL GENERATOR AND OSCILLOSCOPE

Remove the third video IF tube (V5) from its socket.
Use frequency modulated signal with 60% modulation and 450KC sweep. Use 120% sawtooth voltage in scope for horizontal deflection.

	DUMMY ANTENNA	SWEEP GENERATOR COUPLING	SWEEP GENERATOR FREQUENCY	MARKER GENERATOR FREQUENCY	CHANNEL	CONNECT SCOPE	ADJUST	REMARKS
8	.001MFD	High side to point B. Low side to chassis.	4.5MC (450KC Swp)	4.5MC	Any	Vert. amp. to point C. Low side to chassis.	A7, A8	Disconnect stabilizing capacitor (C3). Adjust for curve of maximum amplitude and symmetry similar to Fig. 3.
9	"	"	"	"	"	Vert. amp. to point D. Low side to chassis.	A9	Reconnect stabilizing capacitor (C3). Adjust so that 4.5MC occurs at center of response curve as in Fig. 4. SLIGHTLY retouch A8 for maximum amplitude and straightness of crossover lines. Replace V5 in its socket.

TUNER ALIGNMENT

The tuner portion of this receiver has been properly aligned at the factory and is very stable. Alignment of this portion should not be required in the field.

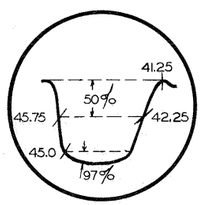

FIG. 1

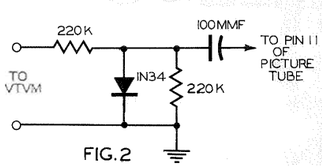

FIG. 2

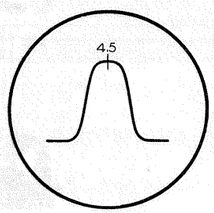

FIG. 3

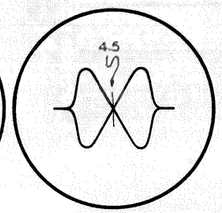

FIG. 4

PACKARD-BELL MODELS 17101, U, 17104, U, 21102, U, 21201, U, 21204, U (Ch. T-10)

CHASSIS TOP VIEW

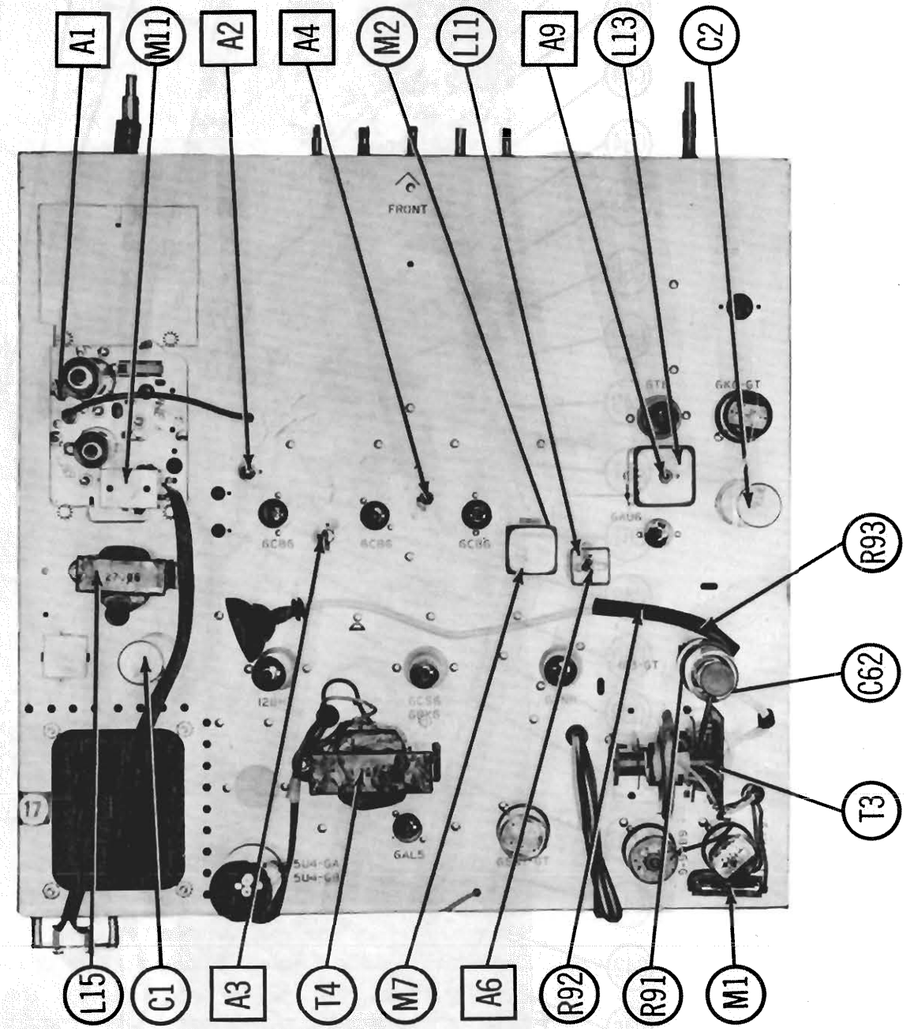

SET 274 FOLDER 11

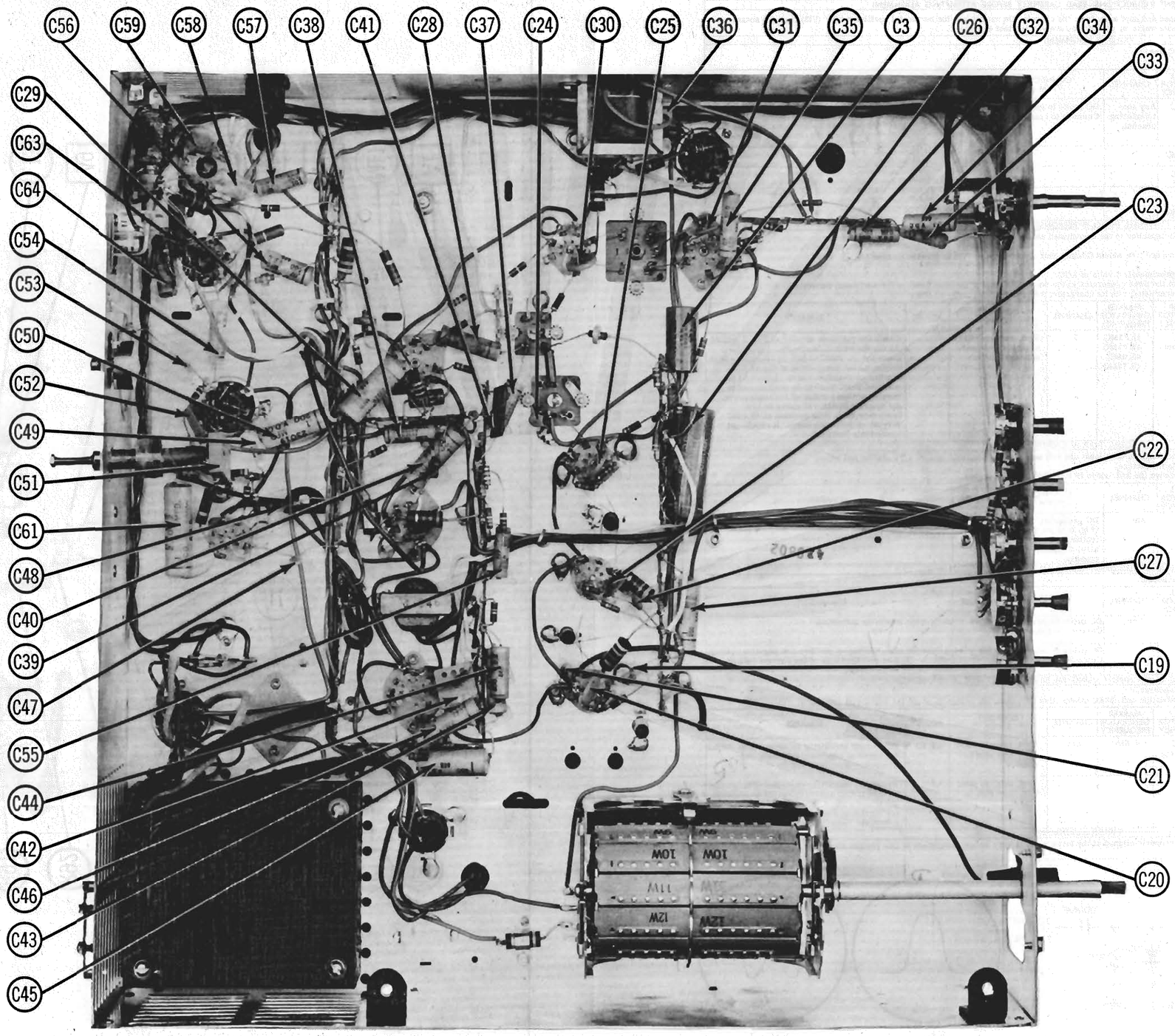

CHASSIS BOTTOM VIEW-CAPACITOR IDENTIFICATION

RESISTANCE MEASUREMENTS

Item	Tube	Pin 1	Pin 2	Pin 3	Pin 4	Pin 5	Pin 6	Pin 7	Pin 8	Pin 9
V 1	6BC5	2.2Meg	0Ω	.1Ω	0Ω	†3.3KΩ	†3.3KΩ	0Ω		
V 2	6AT8	10KΩ	†7.2KΩ	0Ω	.1Ω	0Ω	†4.3KΩ	†7.2KΩ	0Ω	223KΩ
V 3	6CB6	2.2Meg	82Ω	0Ω	.1Ω	†4.7KΩ	†4.7KΩ	0Ω		
V 4	6CB6	2.2Meg	82Ω	0Ω	.1Ω	†4.7KΩ	†4.7KΩ	0Ω		
V 5	6CB6	.1Ω	330Ω	0Ω	.1Ω	†40Ω	†15KΩ	0Ω		
V 6	6AN8	†10.3KΩ	†560KΩ	3.3KΩ	0Ω	.1Ω	†4.7KΩ	†6.5KΩ	470KΩ	500Ω
V 7	6AU6	3.5Ω	0Ω	0Ω	.1Ω	†10KΩ	†10KΩ	150Ω		
V 8	6T8	INF	20KΩ	INF	.1Ω	0Ω	60KΩ	0Ω	4.7Meg	†220KΩ
V 9	6K6GT	NC	0Ω	†620Ω	†40Ω	430KΩ	TP	.1Ω	560Ω	
V 10	6BY6	420KΩ	0Ω	.1Ω	0Ω	†560KΩ	†10KΩ	2.2Meg		
V 11	12BH7	▲7KΩ	4Meg	0Ω	.1Ω	.1Ω	▲2.7Meg	2.5Meg	0Ω	0Ω
V 12	6AL5	15Ω	15Ω	0Ω	.1Ω	4.8Meg	0Ω	4.8Meg		
V 13	6SN7GTA	5Meg	†10KΩ	2.2KΩ	150KΩ	†100KΩ	2.2KΩ	.1Ω	0Ω	
V 14	6BQ6GT	NC	.1Ω	TP	†4.7KΩ	1Meg	TP	0Ω	0Ω	Top Cap ▲16Ω
V 15	6AX4GT	NC	NC	230KΩ	NC	†40Ω	TP	.1Ω	0Ω	
V 16	1B3GT		PINS	1 - 8	HAVE	INF	RESISTANCE			Top Cap ▲500Ω
V 17	5U4GA	NC	12KΩ	NC	16Ω	NC	17Ω	NC	12KΩ	
V 18	21YP4A	0Ω	.6Ω	Pin 6 0Ω	Pin 10 ▲430KΩ	Pin 11 †200KΩ	Pin 12 .1Ω			

ALL MEASUREMENTS TAKEN WITH AGC SWITCH IN "NORMAL" POSITION.
† MEASURED FROM PIN 2 OF V17.
▲ MEASURED FROM PIN 3 OF V15.
NC - NO CONNECTION
TP - TIE POINT

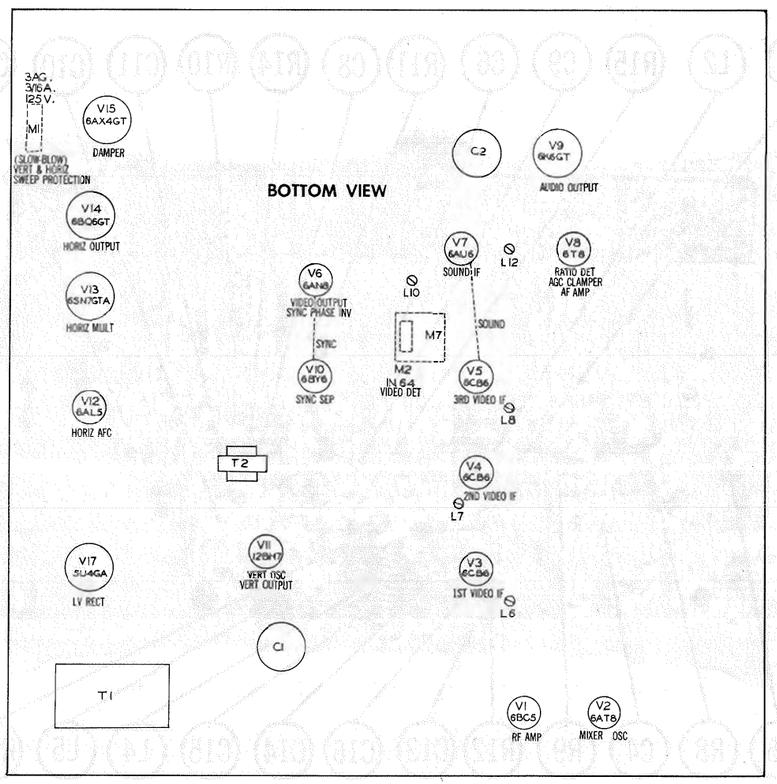

TUBE PLACEMENT CHART

TUBE PLACEMENT CHART

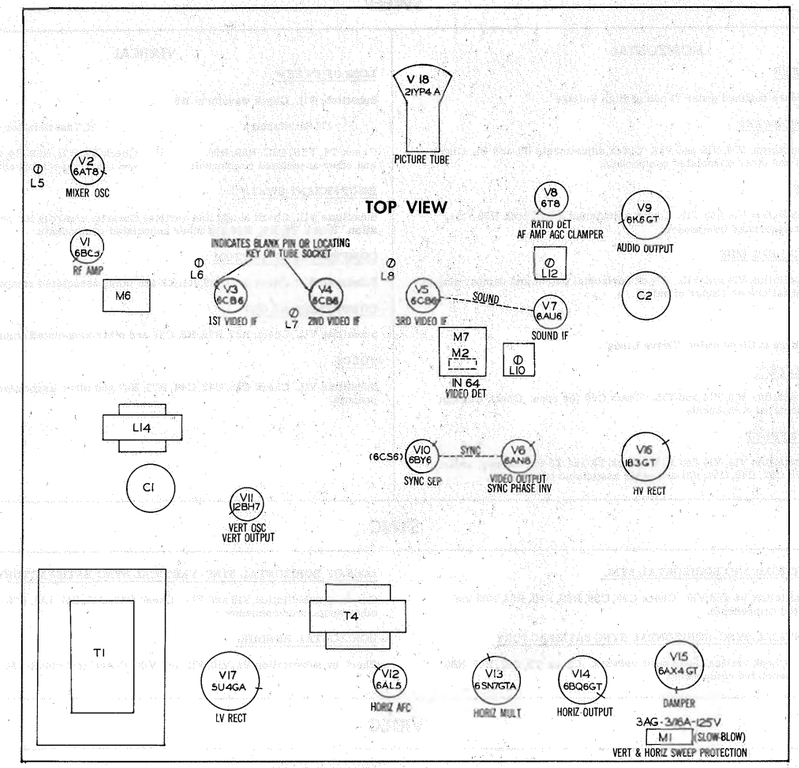

TUBE FAILURE CHECK CHART

The following chart lists tubes whose failures are most likely to produce the indicated symptoms. Refer to tube placement chart for location and type of tube.

POWER SUPPLY FAILURE
No raster, no sound - V17

LOSS OF PICTURE OR SOUND
No pic, no sound, has raster - V2, V3, V4, V5
No pic, no sound, has snow - V1, V2, V3
No pic, has sound, has raster - V6, V18
Has pic, no sound - V7, V8, V9
Overloaded picture - V8

SYNC FAILURE
No vert. sync - V6, V11
No horiz. sync - V6, V12, V13
No vert. or horiz. sync - V6, V10

SWEEP FAILURE
No raster, has sound - V13, V14, V15, V16, V18, Fuse (M1)
No vertical deflection - V11
Poor vert. linearity or foldover - V11
Poor horiz. linearity or foldover - V13, V14, V15
Narrow picture - V13, V14, V15, V16, V17
Vert. off freq. - V6, V11
Horiz. off freq. - V6, V12, V13

TROUBLE SHOOTING AIDS

SWEEP

HORIZONTAL

LOSS OF SWEEP

Follow procedure outlined under "Loss of High Voltage".

INSUFFICIENT SWEEP

Check by substitution V14, V15 and V17. Check adjustments R7 and B1. Check C54, C53, R88 and other associated components.

DRIVE LINES

Check by substitution V14 and V15. Check adjustment R7. Check R88, C54, C56 and other associated components.

COMPRESSED LEFT SIDE

Check by substitution V14 and V15. Check horizontal output and damper stages for component failure or change of value.

FOLDS

Follow procedure outlined under "Drive Lines".

PIE CRUST EFFECT

Check by substitution V13, V14 and V15. Check C50 for open. Check L13, C51 and other associated components.

XMAS TREE EFFECT

Check by substitution V13, V14 and V15. Check T3 and T5 for internal arcing. Check L13, C51, C52, C49, C54, R81 and other associated components.

VERTICAL

LOSS OF SWEEP

Substitute V11. Check waveform W8.

If Satisfactory	If Unsatisfactory
Check T4, T5B, C2C, R89, R90 and other associated components.	Check T2, R71, R69, R4, C45, C43 and other associated components.

INSUFFICIENT SWEEP

Substitute V11. Check height and vertical linearity controls for proper operation. Check T4, R71, R69 and other associated components.

COMPRESSED AT BOTTOM

Substitute V11. Check R71, R69, R4, T2 and other associated components.

COMPRESSED AT TOP

Substitute V11. Check R87, R72, R3, C45 and other associated components.

FOLDS

Substitute V11. Check C45, C43, C44, R73, R87 and other associated components.

SYNC

LOSS OF VERTICAL AND HORIZONTAL SYNC

Check by substitution V6 and V10. Check C38, C39, R60, R59, R64, R63 and other associated components.

LOSS OF VERTICAL SYNC-HORIZONTAL SYNC SATISFACTORY

Substitute V11. Check vertical integrator network. Check T2, C42, R67, R68, R2 and other associated components.

LOSS OF HORIZONTAL SYNC-VERTICAL SYNC SATISFACTORY

Check by substitution V12 and V13. Check C47, C48, C51, L13, R76, R77 and other associated components.

HORIZONTAL BENDING

Check by substitution V6, V10, V12 and V13. Check horizontal AFC network.

VIDEO

LOSS OF VIDEO

Substitute V6. Check C28, C29, R38, R41, L12 and other associated components.

SOUND BARS (4.5MC BEAT)

Adjust tuner fine tuning for best sound and picture. Check adjustment A6. Check video IF alignment.

POOR CONTRAST

Substitute V6. Check C28, C29, R36, L9, L10 and other associated components.

NEGATIVE PICTURE

Substitute V6. Check picture tube. Check L10, L11, C28, C29 and other associated components. Check video crystal detector network.

SMEAR

Substitute V6. Check L9, L10, L11, C28, C29 and other associated components.

WIDE BLACK BAR ACROSS PICTURE

Check by substitution V1, V3, V4, V5 and V6 for heater to cathode leakage.

AUDIO

WEAK OR NO SOUND

Check by substitution V7, V8 and V9. Check stages V8 and V9 using audio signal generator. Apply audio signal across R18.

If Satisfactory	If Unsatisfactory
Check ratio detector and audio IF stages for component failure or change of value.	Check C31, C33, C34, C35, C36, R53, R55, T7, speaker and other associated components.

BUZZ

Adjust tuner fine tuning for best sound and picture. Check adjustment A9 for minimum buzz. If still unsatisfactory, check audio IF alignment.

DISTORTED

Follow procedure outlined under "Weak or No Sound".

POWER

DEAD SET

If filaments fail to light, check AC interlock assembly. Check switch on volume control and T1. If filaments light, substitute V17. Check B+ filter and decoupling network.

SMALL AND/OR DIM PICTURE

Substitute V17. Check B+ filter and decoupling network.

TROUBLE SHOOTING AIDS (cont)

HIGH VOLTAGE

LOSS OF HIGH VOLTAGE

Check by substitution V13, V14, V15 and V16. Check M1 fuse. Check waveform W15.

If Satisfactory	If Unsatisfactory
Check T3, T5A, T6, C57, C59, C58, C56, R88 and other associated components.	Check L13, C51, C52, C54, R84, R82, R81 and other associated components.

INSUFFICIENT HIGH VOLTAGE

Check by substitution V14, V15 and V17. Check adjustments B1 and R7. Check R88, C54, C53 and other associated components.

BLOOMING

Check by substitution V14, V15, V16 and V17. Check R92, R93, R88, C54 and other associated components.

GENERAL

RASTER, SOUND, NO PICTURE

Follow procedure outlined under "Loss of Video".

RASTER, PICTURE, NO SOUND

Follow procedure outlined under "Weak or No Sound".

RASTER, NO SOUND, NO PICTURE

Check by substitution V1, V2, V3, V4, V5 and V6. Check video IF components for failure or change of value.

NO RASTER, NO SOUND

Follow procedure outlined under "Dead Set".

KEYSTONE EFFECT

Check T5 and its associated components.

INTERMITTENT STREAKS

Check high voltage section for corona discharge and arcing.

Symptoms shown are assumed and are not indicative of the quality and workmanship of this equipment.

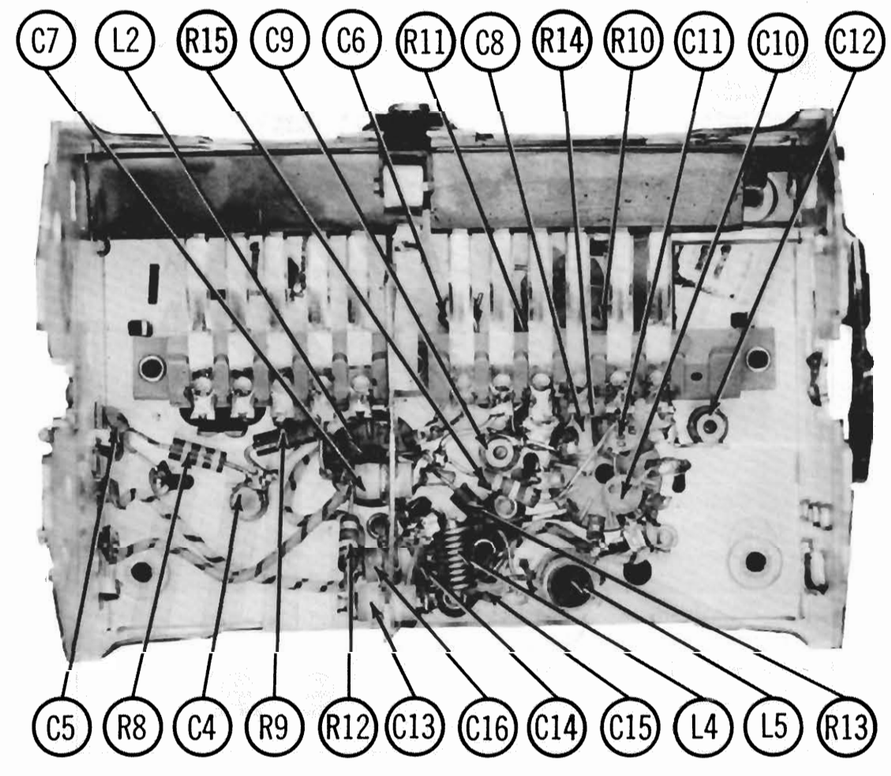

RF TUNER BOTTOM VIEW

SERVICING IN THE FIELD

TUNER OSCILLATOR ADJUSTMENTS

Touch-up adjustments of the VHF tuner oscillator circuit may be accomplished by removal of the channel selector and fine tuning knobs. The adjustments are accessible, one at a time, thru the small hole in the cabinet,above and slightly to the left of the channel selector shaft.

PICTURE TUBE SAFETY GLASS CLEANING

To clean safety glass, remove 4 wood screws holding wood strip at the top of the safety glass. Remove wood strip and safety glass. Use extreme caution when removing safety glass.

PICTURE TUBE REMOVAL

For picture tube removal it is necessary to remove chassis. (See disassembly instructions).

SERVICE ADJUSTMENT LOCATION

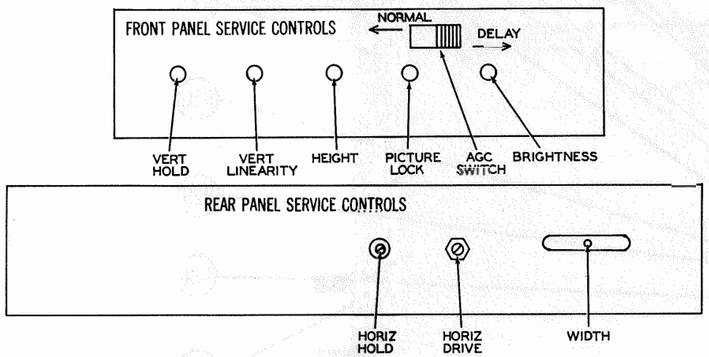

SPECIAL ADJUSTMENTS - PICTURE LOCK ADJUSTMENT

The picture lock control should be adjusted at the location where the receiver is to be used.

Tune in a TV station locally.

Turn picture lock control clockwise until picture begins to distort. Turn control counter clockwise until sync remains stable. NOTE: If noise tends to distort sync, control should be set as far clockwise as possible without pulling picture.

HORIZONTAL OSCILLATOR FIEL D ADJUSTMENT

Adjustment of the horizontal oscillator circuit can be made from rear panel of the chassis. Adjust the horizontal hold slug until picture synchronizes horizontally.

SOUND IF DETECTOR BUZZ ADJUSTMENT

To eliminate sound IF detector buzz, adjust the radio detector secondary (L13) located on top of chassis.

FUSES

One fuse is used for horizontal sweep and vertical sweep protection. (For location see tube placement chart).

CENTERING

Centering is accomplished mechanically by adjusting two magnetic rings around the neck of the picture tube, located flush against the deflection yoke. Rotate the two rings around the neck of the tube until the picture is properly centered.

DISASSEMBLY INSTRUCTIONS

1. Remove 4 push-on type control knobs from front panel of cabinet.
2. Remove 7 wood screws. Remove rear cover.
3. Remove speaker plug from rear panel of chassis.
4. Remove 4 chassis bolts. Remove chassis.
5. Remove 4 wood screws. Remove speaker.

PICTURE TUBE REMOVAL

1. Disconnect picture tube socket and HV lead.
2. Remove Ion trap.
3. Loose 2 front tube mounting band nuts. Remove picture tube.

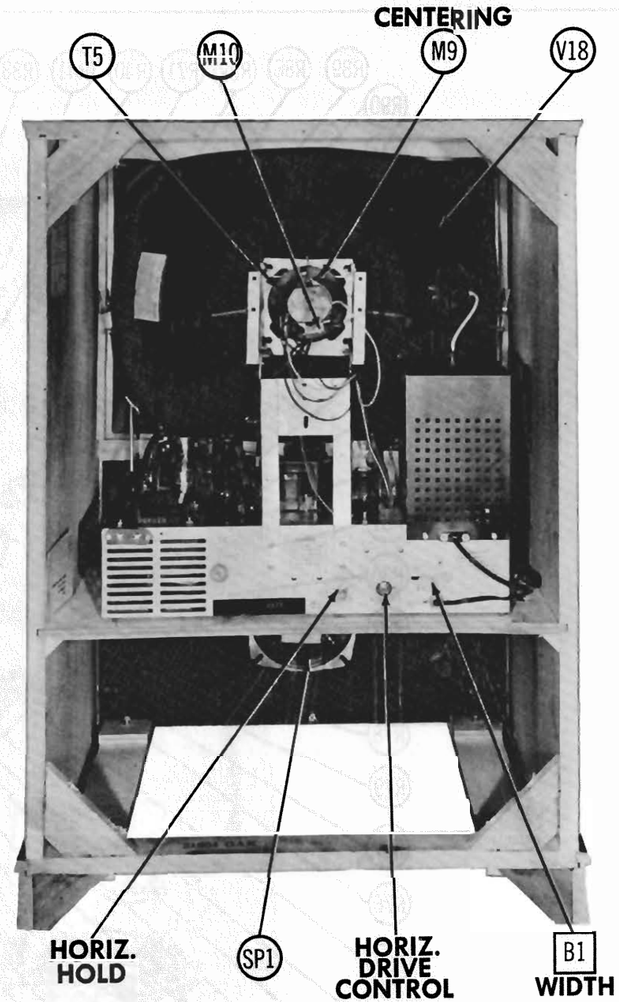

CABINET—REAR VIEW

HORIZONTAL SWEEP CIRCUIT ADJUSTMENTS

Turn on the set and tune in a TV station, preferably a test pattern.

Adjust the horizontal oscillator slug (L13) (labeled "Horizontal Hold" on rear panel) until the picture synchronizes horizontally. The correct setting of L13 slug is approximately half-way between the point where picture tears.

Adjust the horizontal drive control (R7) in a clockwise direction as far as possible without the presence of vertical white lines or compression near the center of the picture.

Adjust the width slug (B1) for a picture slightly wider than necessary to fill picture mask horizontally.

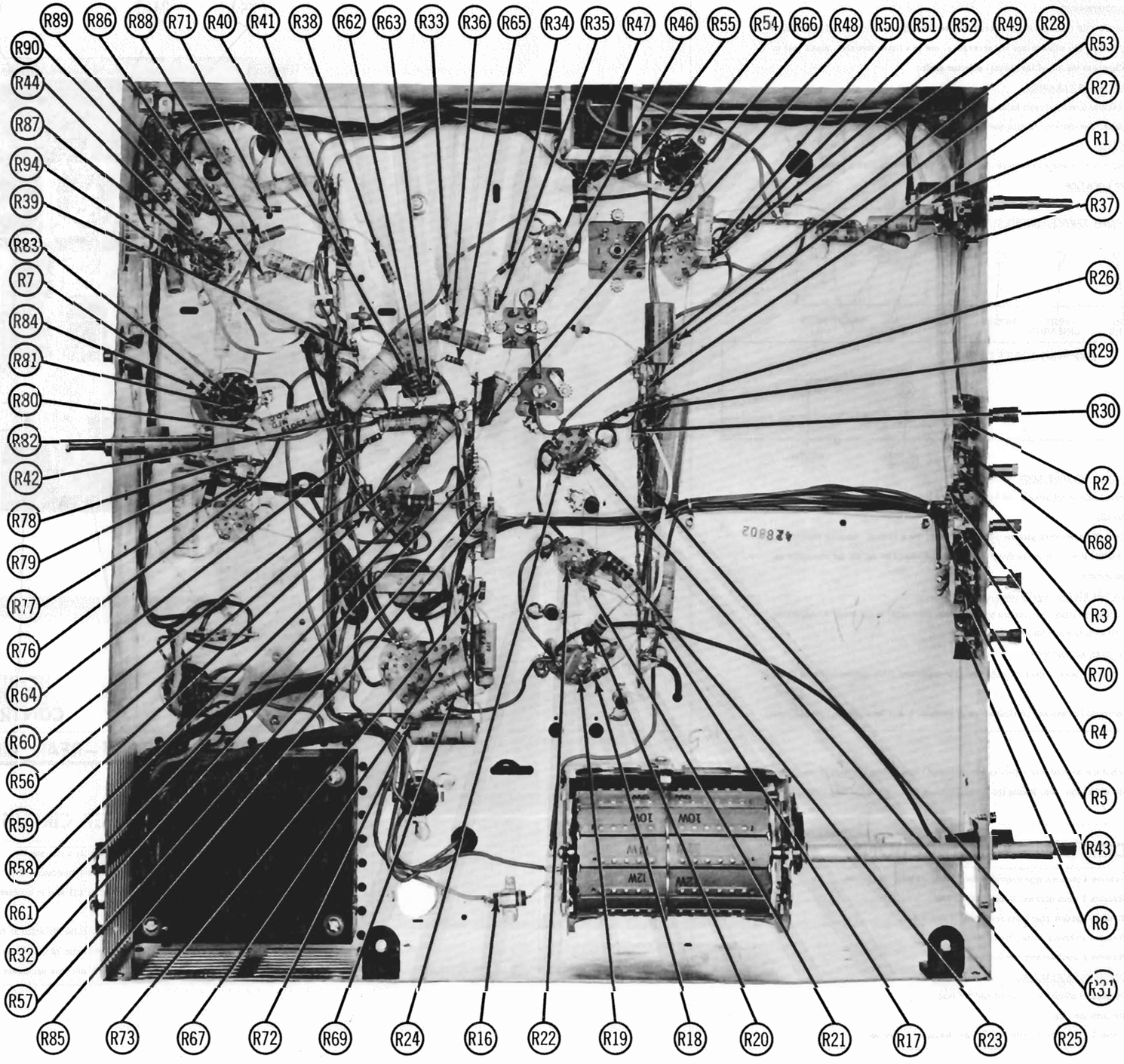

CHASSIS BOTTOM VIEW-RESISTOR IDENTIFICATION

PARTS LIST AND DESCRIPTIONS (Continued)

FILTER CHOKE

ITEM No.	RATINGS			REPLACEMENT DATA					
	TOTAL DIRECT CURRENT	D. C. RESISTANCE	INDUCTANCE (0 CURRENT 1000 ∿)	Packard-Bell PART No.	Stancor PART No.	Merit PART No.	Triad PART No.	Halldorson PART No.	Thordarson PART No.
L15	.240ADC	38.5Ω	1 Hy.	27006	C-2326①	C-2996 ①	C-23X ①	C5037 ①	26C44 ①

① Drill one new mounting hole.

FUSES

ITEM No.	TYPE	RATING	REPLACEMENT DATA					
			Packard-Bell PART No.		LITTELFUSE PART No.		BUSS PART No.	
			FUSE	HOLDER	FUSE	HOLDER	FUSE	HOLDER
M1	3AG S/B	3/16A 125V			313.187 (3AG-S/B-3/16A)	357001	MDL 3/16	4405

CRYSTAL DIODES

ITEM No.	ORIG. TYPE	REPLACEMENT DATA			NOTES
		Packard-Bell PART No.	SYLVANIA PART No.		
M2	1N64		1N60 or 1N132		Video Detector

MISCELLANEOUS

ITEM No.	PART NAME	Packard-Bell PART No.	NOTES
M3	Dial Light		#47, Bayonet
M4	Tuner	70537	VHF- Models without "U" suffix
M5	Tuner	10535C	VHF-UHF Models with "U" suffix
M6	Ant. Crossover Network	10536	VHF-UHF Models with "U" suffix
M7	Video Det.Assy.	29580	Includes M2, 4th. Video IF & capacitor
M8	Switch		AGC (Slide type DPDT) Not used in some versions
M9	Centering Device		
M10	Ion Trap	28106A	
M11	Trap		VHF Ant. Input Filter
	Knob	52095	UHF tuning - "U" Models
	Knob	52096	VHF tuning - "U" Models
	Knob	52097	Fine tuning - "U" Models
	Knob	52098	On-off - volume-"U" Models

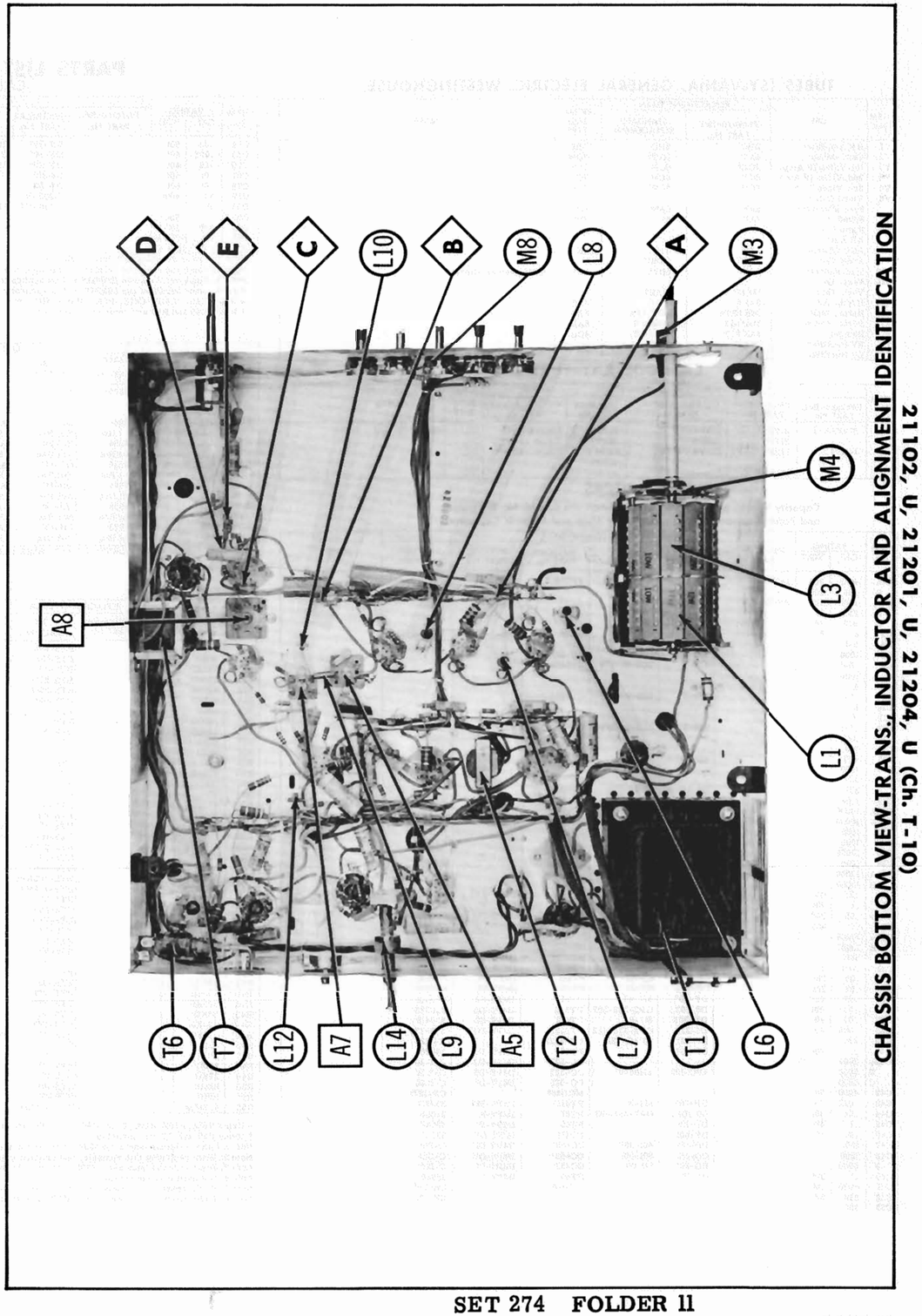

PACKARD-BELL MODELS 17101, U, 17104, U, 21102, U, 21201, U, 21204, U (Ch. T-10)

CHASSIS BOTTOM VIEW-TRANS., INDUCTOR AND ALIGNMENT IDENTIFICATION

PARTS LIST AND DESCRIPTIONS

TUBES (SYLVANIA, GENERAL ELECTRIC, WESTINGHOUSE)

ITEM No.	USE	REPLACEMENT DATA: Packard-Bell PART No.	STANDARD REPLACEMENT	RETMA BASE TYPE	NOTES
V1	RF Amplifier	6BC5	6BC5	7BD	
V2	Osc.-Mixer	6AT8	6AT8	9DW	
V3	1st. Video IF Amp.	6CB6	6CB6	7CM	
V4	2nd. Video IF Amp.	6CB6	6CB6	7CM	
V5	3rd. Video IF Amp.	6CB6	6CB6	7CM	
V6	Video Output-Sync Phase Inv.	6AN8	6AN8	9DA	
V7	Sound IF Amp.	6AU6	6AU6	7BK	
V8	Ratio Det.-AF Amp.-AGC Clamper	6T8	6T8	9E	
V9	Audio Output	6K6GT	6K6GT	7S	
V10	Sync Separator	6BY6	6BY6	7CH	6CS6 used as alternate
V11	Vert. Osc. Vert. Output	12BH7	12BH7	9A	
V12	Horiz. AFC	6AL5	6AL5	6BT	
V13	Horiz. Mult.	6SN7GTA	6SN7GTA	8BD	
V14	Horiz. Output	6BQ6GT	6BQ6GT	6AM	
V15	Damper	6AX4GT	6AX4GT	4CG	
V16	HV Rectifier	1B3GT	1B3GT	3C	
V17	LV Rectifier	5U4GA	5U4GA	5T	

CATHODE-RAY TUBE

ITEM No.	REPLACEMENT DATA: Packard-Bell PART No.	CBS-HYTRON PART No.	GENERAL ELECTRIC PART No.	SYLVANIA PART No.	WESTINGHOUSE PART No.	RETMA BASE TYPE	NOTES
V18	21YP4A ①	21YP4A ①	21YP4A ①	21YP4A ①	21YP4A ①	12L	① Aluminized
		21YP4	21YP4	21YP4	21YP4	12L	
	17HP4	17HP4/17RP4	17RP4 / 17HP4	17HP4 / 17RP4	17HP4 / 17RP4	12L	
		17BP4B ①				12L	

CAPACITORS

Capacity values given in the rating column are in mfd. for Electrolytic and Paper Capacitors, and in mmfd. for Mica and Ceramic Capacitors.

ITEM No.	RATING: CAP.	VOLT	REPLACEMENT DATA: Packard-Bell PART No.	CENTRALAB PART No.	ERIE PART No.	MALLORY PART No.	PYRAMID PART No.	SANGAMO PART No.	NOTES
C1A	▪60	300	24084			FP333.5	TM-2024	S-180	
B	▲10	200						MT-2510	
C2A	▲80	300	24083				TM-3124		
B	25	25							
C	▪10	350							
C3	5	50				TC30	TD-5-50	MMT-0505	
C4	5-11								
C5	1000			DD-102	801-001	DC-521			
C6	.5-3			829-3	3115-01-0R5	CT565A			
C7	1000								
C8	47								
C9	.5-3			829-3	3115-01-0R5	CT565A			
C10	10								
C11	10								
C12	.5-3			829-3	3115-01-0R5	CT565A			
C13	1000								
C14	100								
C15	470			DD-471	831-471	UC-5347			
C16	1000								
C17	56								Note 1
C18	330			D6-331	GP2K-331	UC-5133			Note 1
C19	1000			DD-102	801-001	DC-521		K-1210	
C20A	10000			DD3-103	811-01	DC-511			
B	10000				811-01	DC-511			
C21	1000			DD-102	801-001	DC-521		K-1210	
C22	1000			DD-102	801-001	DC-521		K-1210	
C23	10000			DD-103	811-01	DC-511			
C24	1000			DD-102	801-001	DC-521		K-1210	
C25A	10000			DD3-103	811-01	DC-511			
B	10000				811-01	DC-511			
C26	.25	600				PT6015	IMP6-P25	3306025	Note 2
C27	.1	200		DF-104		PT401	IMP2-P1	330201	
C28	.05	200		DF-503		PT415	IMP1-S5	330215	
C29	.1	400		DF-104		PT401	IMP1-P1	330401	
C30A	10000			DD3-103	811-01	DC-511			
B	10000				811-01	DC-511			
C31	5000			DD-502	811-005	DC-525	IMP4-D5	C-1250	
C32	.003	200		D6-302	GP2-333-302	PT623	IMP4-D3	330623	
C33	.02	200		DF-203	817-02	PT412	IMP1-S2	330212	
C34	.02	200		DF-203	817-02	PT412	IMP1-S2	330212	
C35	.02	600		DF-203	817-02	PT612	IMP6-S2	330612	
C36	.005	600		D6-502	GP2-333-502	PT625	IMP6-D5	330625	
C37	.02	400		DF-203	817-02	PT412	IMP4-S2	330412	
C38	.0033	400		D6-332	GP2-333-332	PT6233	IMP6-D33	3306233	
C39	220			D6-221	GP2K-221	UC-5322		K-1322	
C40	.1	200		DF-104		PT401	IMP2-P1	330201	
C41A	2000					DC-522	IMP6-D2	C-1220	
B	5000		♦	♦PC-100	♦1405-01	DC-525	IMP6-D5	C-1250	
C	5000					DC-525	IMP6-D5	C-1250	
C42	4900	500				MCB465		CR-1249	
C43	.022	600		DF-203	817-02	PT6122	IMP6-S22	3306122	
C44	.01	600		D6-103	GP2-333-103	PT611	IMP6-S1	330611	
C45	.1	400		DF-104		PT401	IMP4-P1	330401	
C46	.047	400		DF-503		PT4147	IMP4-S47	3304147	
C47	1500			DD-152	801-0015	DC-5215	IMP6-D15	C-1215	
C48	1500			DD-152	801-0015	DC-5215	IMP6-D15	C-1215	
C49	5000		†	DD-502	811-005	DC-525	IMP6-D5	C-1250	
C50	.1	200		DF-104		PT401	IMP2-P1	330201	
C51	4000	500				MCB463		CR-1240	
C52	330	500						KR-1333	
C53	330								

CAPACITORS (cont)

ITEM No.	RATING: CAP.	VOLT	REPLACEMENT DATA: Packard-Bell PART No.	CENTRALAB PART No.	ERIE PART No.	MALLORY PART No.	PYRAMID PART No.	SANGAMO PART No.	NOTES
C54	.02	600		DF-203	817-02	PT612	IMP6-S2	330612	
C55	.005	600		DF-503	GP2-333-502	PT625	IMP6-D5	330625	
C56	.02	400		DF-203	817-02	PT412	IMP4-S2	330412	
C57	.01	600		D6-103	GP2-333-103	PT611	IMP6-S1	330611	
C58	.05	600		DF-503		PT615	IMP6-S5	330615	
C59	56	4000		DD60-560					Note 3
C60	47			DD30-470	3KV-470				Note 4
C61	.1	600		DF-104		PT601	IMP6-P1	330601	
C62	500	20000		TV3-502	413	HV20035A			
C63	.01	125VAC							
C64	.01	125VAC							

Note 1. Use in versions with tuner #10535 only.
Note 2. Some versions use .05MFD in this application.
Note 3. Some versions use 120MMF in this application.
Note 4. Some versions use 56MMF in this application.
♦ Items C41A, C41B, C41C, R66A, R66B, R66C are combined in one unit.
† Items C49 and R80 are combined in one unit.

CONTROLS

ITEM No.	RATING: RESIST-ANCE	WATTS	REPLACEMENT DATA: Packard-Bell PART No.	IRC PART No.	CLAROSTAT PART No.	CENTRALAB PART No.	MALLORY PART No.	INSTALLATION NOTES
R1A	500KΩ	½	23835A	*QJ-36		F1-21	UF53R	Contrast - Panel
B	500KΩ	½				R2-41	UR55A	Volume - Rear
C	Switch					KB-1	US-26	Attach to R1B
R2A	3Meg	½	23854	Q11-140	A47-3Meg-S	AB-84	U-59	Vertical Hold
B	Shaft		Not Req.	Not Req.	KSS-3	AK-4	Not Req.	Attach to R2A
R3A	3Meg	½	23854	Q11-140	A47-3Meg-S	AB-84	U-59	Vertical Linearity
B	Shaft		Not Req.	Not Req.	KSS-3	AK-4	Not Req.	Attach to R3A
R4A	3Meg	½	23854	Q11-140	A47-3Meg-S	AB-84	U-59	Height
B	Shaft		Not Req.	Not Req.	KSS-3	AK-4	Not Req.	Attach to R4A
R5A	7.5Meg	½	23874	Q11-142	A47-7.5Meg-S	AB-89	U-82	Picture Lock
B	Shaft		Not Req.	Not Req.	KSS-3	AK-4	Not Req.	Attach to R5A
R6A	50KΩ	½	23856	Q11-123	A47-50K-S	AB-31	U-35	Brightness
B	Shaft		Not Req.	Not Req.	KSS-3	AK-4	Not Req.	Attach to R6A
R7A	50KΩ	½	23873	Q11-123	A47-50K-S	BX-31	U-35	Horizontal Drive
B	Shaft		Not Req.	Not Req.	FKS-1/4	Not Req.	Not Req.	Attach to R7A

* CONCENTRIKIT EQUIVALENT: KIT K-2, BASE ELEMENTS & SHAFTS: B17-114 & P1-112 (PANEL)
B13-133 & R2-204 (REAR)
76-1 SWITCH

RESISTORS

ITEM No.	RATING: OHMS	WATT	REPLACEMENT DATA: Packard-Bell PART No.	IRC PART No.	NOTES
R8	47KΩ	½		BTS-47K	
R9	15KΩ	½		BTS-15K	
R10	220KΩ	½		BTS-220K	
R11	2700Ω	½		BTS-2700	
R12	3900Ω	½		BTS-3900	
R13	1000Ω	½		BTS-1000	
R14	10KΩ	½		BTS-10K	
R15	3900Ω	½		BTS-3900	
R16	3300Ω	2		BTB-3300	
R17	120Ω	½		BTS-120	
R18	10KΩ	½		BTS-10K	
R19	82Ω	½		BTS-82	
R20	4700Ω	2		BTB-4700	
R21	12KΩ	½		BTS-12K	
R22	82Ω	½		BTS-82	
R23	4700Ω	2		BTB-4700	
R24	6800Ω	½		BTS-6800	
R25	330Ω	½		BTS-330	Note 5
R26	15KΩ	½		BTS-15K	Note 6
R27	2.2Meg	½		BTS-2.2Meg	
R28	3300Ω	½		BTS-3300	
R29	56KΩ	½		BTS-56K	
R30	3.3Meg	½		BTS-3.3Meg	
R31	2.2Meg	½		BTS-2.2Meg	
R32	39KΩ	½		BTS-39K	
R33	470KΩ	½		BTS-470K	
R34	100KΩ	½		BTS-100K	
R35	56KΩ	½		BTS-56K	
R36	56Ω	½		BTS-56	
R37	3300Ω	½		BTS-3300	
R38	8200Ω	1		BTA-8200	
R39	10KΩ	½		BTS-10K	
R40	33KΩ	1		BTA-33K	
R41	4700Ω	2		BTB-2700	
R42	220KΩ	½		BTS-220K	
R43	56KΩ	½		BTS-56K	
R44	470KΩ	½		BTS-470K	
R45	220KΩ	½		BTS-220K	Note 4
R46	150Ω	½		BTS-150	
R47	10KΩ	2		BTB-10K	
R48	470Ω	½		BTS-470	
R49	27KΩ	½		BTS-27K	
R50	10KΩ	½		BTS-10K	
R51	10KΩ	½		BTS-10K	
R52	4.7Meg	½		BTS-4.7Meg	

ITEM No.	RATING: OHMS	WATT	REPLACEMENT DATA: Packard-Bell PART No.	IRC PART No.	NOTES
R53	220KΩ	½		BTS-220K	
R54	430KΩ 5%	½		BTS-430K 5%	
R55	560Ω	1		BTA-560	
R56	470KΩ	½		BTS-470K	
R57	330KΩ	½		BTS-330K	Note 1
R58	2.2Meg	½		BTS-2.2Meg	
R59	18KΩ	2		BTB-18K	Note 2
R60	560KΩ	½		BTS-560K	
R61	8200Ω	2		BTB-8200	
R62	3300Ω	½		BTS-3300	
R63	10KΩ	2		BTB-10K	
R64	3300Ω	½		BTS-3300	
R65	56KΩ	½		BTS-56K	
R66A	22KΩ	½		BTS-22K	
B	8200Ω	½	♦	BTS-8200	
C	8200Ω	½		BTS-8200	
R67	1Meg	½		BTS-1Meg	
R68	100KΩ	½		BTS-100K	Note 3
R69	1.5Meg	½		BTS-1.5Meg	
R70	470KΩ	½		BTS-470K	
R71	220KΩ	½		BTS-220K	
R72	3.3Meg	½		BTS-3.3Meg	
R73	15KΩ	½		BTS-15K	
R74	560Ω	½		BTS-560	
R75	560Ω	½		BTS-560	
R76	100KΩ	½		BTS-100K	
R77	100KΩ	½		BTS-100K	
R78	4.7Meg	½		BTS-4.7Meg	
R79	15Ω	1			
R80	470KΩ	½	†	BTS-470K	
R81	2200Ω	½		BTS-2200	
R82	10KΩ	½		BTS-10K	
R83	150KΩ	½		BTS-150K	
R84	100KΩ	½		BTS-100K	
R85	220KΩ	½		BTS-220K	
R86	820KΩ	½		BTS-820K	
R87	820KΩ	½		BTS-820K	
R88	4700Ω	1		BTA-4700	
R89	6800Ω	2		BTB-6800	
R90	56KΩ	½		BTS-56K	Note 4
R91	3.3Ω	1			
R92	1Meg	1		BTA-1Meg	
R93	1Meg	1		BTA-1Meg	
R94	100KΩ	1		BTA-100K	

♦ Items R66A, R66B, R66C, C41A, C41B and C41C are combined in one unit.
† Items R80 and C49 are combined in one unit.
Note 1: Some versions may use a 150KΩ resistor in this application.
Note 2: When replacing this resistor, use original clamp or double wattage.
Note 3: Some versions may use a 470KΩ resistor in this application.
Note 4: Not used in some versions.
Note 5: Early production models use a 120Ω ½ watt resistor, later production models use a 270Ω ½ watt resistor in this application.
Note 6: Early production models use a 3300Ω 2 watt resistor in series with the screen and plate leads of V5 to B+.

TRANSFORMER (POWER)

ITEM No.	RATING: PRI.	SEC. 1	SEC. 2	REPLACEMENT DATA: Packard-Bell PART No.	Stancor PART No.	Merit PART No.	Triad PART No.	RCA TYPE No.	Halldorson PART No.	Thordarson PART No.
T1	117VAC @1.38A	460VCT .260ADC	5VAC @3A	89051			R-60BC ③			26R33①②
	SEC. 3	SEC. 4	SEC. 5							
	6.3VAC @7.9A									

① Use low taps on HV secondary, tape other leads, also tape extra 5V winding.
② Parallel and phase 5.3V windings for Sec. #3.
③ Tape low ampere 6.3V winding.

TRANSFORMERS (SWEEP CIRCUITS)

ITEM No.	USE	REPLACEMENT DATA: Packard-Bell PART No.	Halldorson PART No.	Merit PART No.	RCA TYPE No.	Ram PART No.	Stancor PART No.	Thordarson PART No.	Triad PART No.
T2	Vert.Osc. Trans.	89046	B6702	A-3003	209T1 ①	V405	A-8125	24A87①	A-97X
T3	Horiz.Output Trans.	89440	FB411	HV0-9	230T1	X080	A-8137	FLY-24	D-22
T4	Vert.Output Trans.	89456	Z1805 ①	A-3080 ②		V306 ①	A-8140①	26S56 ②	A-103X
T5A	Yoke-Horiz. (19MH)	29556							
B	Vert. (3.3MH)								
T6	Width Coil (4-18MH)	29555	RF800③④	MWC-1④③	212R1 ③	20IR16④	WC-5 ④	WC-18	WC-12③④

① Drill new mounting hole(s).
② Use 50-1 turns ratio.
③ Connect to coded blue and red terminals.
④ Drill new mounting hole(s) or use original slider and core.

*HORIZONTAL OUTPUT TRANSFORMER CONNECTION DATA

Use Original Width Coil Unless Replacement Type Is Listed

	ORIGINAL TERMINAL CONNECTIONS	Halldorson Replacement Connections	Merit Replacement Connections	RCA Replacement Connections	Ram Replacement Connections	Stancor Replacement Connections	Thordarson Replacement Connections	Triad Replacement Connections
	7	9	9	9	9	7	9	9
	4	8 or 7	8 or 7	8 or 7	5	4	8 or 7	Jumper 7 & 8
	T (NC)	NC	NC	NC	NC	NC	NC	NC
	3	3	3	3	3	3	3	3
	1	1	1	1	1	1	1	1
Connect Width Coil Across →	3 & 1	3 & 1	3 & 1	3 & 1	3 & 1	3 & 1	3 & 1	3 & 1
Special Notes →		⑤	⑤	⑤	⑥		⑤	

⑤ In case of insufficient width add capacitance across terminals " T" and "3". Values required may range from .001MFD @ 600V to .005MFD @ 600V.
⑥ Jumper terminals "7" and "8".

TRANSFORMER (AUDIO OUTPUT)

ITEM No.	IMPEDANCE: PRI.	SEC.	REPLACEMENT DATA: Packard-Bell PART No.	Stancor PART No.	Merit PART No.	Triad PART No.	Halldorson PART No.	Thordarson PART No.	NOTES
T7	5.8KΩ	3.3Ω	89427	A-3877	A-2930	S-3X	Z1000	24S51	

SPEAKER

ITEM No.	RATINGS: SIZE	FIELD	V. C. IMP.	REPLACEMENT DATA: Packard-Bell PART No.	JENSEN PART No.	QUAM PART No.	NOTES
SP1	6"	PM	3.3Ω	83305	ST-108 Mod. P6-X	6A1	

COILS (RF-IF)

ITEM No.	USE	DC RES.: PRI.	SEC.	REPLACEMENT DATA: Packard-Bell PART No.	MEISSNER PART No.	MERIT PART No.	MILLER PART No.	NOTES
L1	Ant. Coils	0Ω CT	0Ω					
L2	RF Choke	0Ω						
L3	RF, Mixer Grid & Osc. Coils	0Ω						
L4	RF choke	0Ω						
L5	Conv. Plate	.1Ω						
L6	1st. Video IF	.1Ω		29559	20-1045 *	TV-131	6225	
L7	2nd. Video IF	.1Ω	.1Ω		17-4502 ▪	TV-130	6219	
L8	3rd. Video IF	.1Ω	.1Ω	29579	17-4500 ▪	TV-130	6219	
L9	Series Peaking Coil	1.6Ω			19-1005		4612	10 Microhenries
L10	Shunt Peaking Coil	10Ω			19-4180	TV-183	6179	170 Microhenries, wound on 39KΩ resistor
L11A	4.5MC Trap	2.2Ω						
B	Sound IF	3.5Ω		29563	17-1021 ▲	TV-108 ▲	1466 ▲	
L12	Shunt Peaking Coil	16Ω			19-3300 ▲	TV-190 ▲	4648 ▲	380 Microhenries, wound on 18KΩ resistor
L13	Ratio Det.	4Ω	.2ΩCT	29054	17-3493	TV-115 ♦	1499	Tertiary winding -.8Ω
L14	Horiz. Osc.	78Ω			19-1576	TV-163	6319	

* Use one winding only.
▪ Detune trap winding.
▲ Drill one new mounting hole.
▲ Parallel with 18KΩ resistor.
♦ Use adaptor plate.

PACKARD-BELL
MODELS 17101, U, 17104, U,
21102, U, 21201, U, 21204, U (Ch. T-10)