PHOTOFACT* Folder

*TRADE MARK

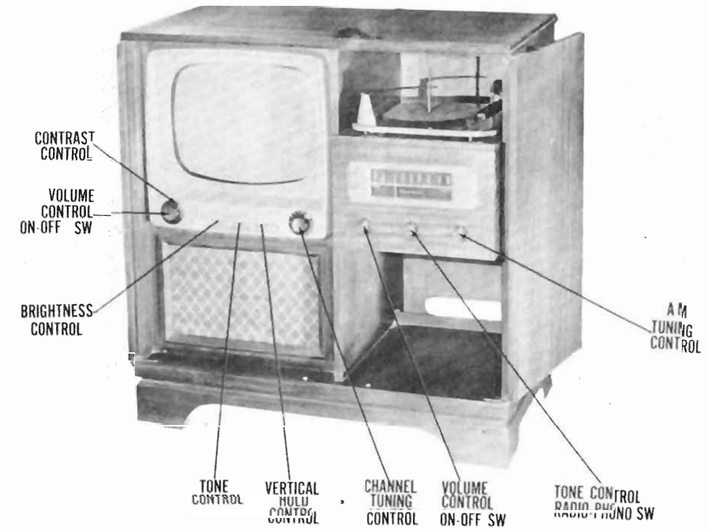

RAYTHEON MODEL RC-1718B

TRADE NAME	Raytheon	CHASSIS	MODELS
		16AY28	C-1615B, C-1616B, M-1611B, M-1612B, M-1613B, M-1614B, RC-1618B, RC-1619B
		16AY211	C-1615A, C-1616A, M-1611A, M-1612A, M-1613A, M-1614A, RC-1618A, RC-1619A
		17AY21	C-1714B, C-1715B, C-1716B, M-1711B, M-1712B, M-1713B, RC-1718B, RC-1719B
		17AY24	C-1715A, C-1716A, C-1718A, C-1719A, M-1711A, M-1712A, M-1713A, M-1714A
MANUFACTURER	Belmont Radio Corp., 5921 W. Dickens Ave., Chicago 39, Illinois		
TYPE SET	TV-AM-Phono Combination Receiver (Some Models "TV Only")		
TUBES	Twenty One ("TV Only" Receivers) Twenty Six (Combination Receivers)		
POWER SUPPLY	110-120 Volts AC-60 Cycle		
RATING	TV-1.9 Amp. at 117 Volts AC, Radio .23 Amp. at 117 Volts AC		
TUNING RANGE	TV- Channels 2 thru 13 , AM- 540-1600KC		

INDEX

Alignment Instructions 6, 7
Dial Cord Stringing 10
Disassembly Instructions 19
Horiz. Sweep Circuit Adjustments 19
Parts List and Description 13, 14, 15, 16
Photographs
Cabinet-Rear View 19
Capacitor and Alignment Identification 4, 9
Chassis-Top View 3
Photographs (continued)
RF Tuner 10
Radio Chassis-Bottom View 12
Radio Chassis-Top View 12
Resistor and Inductor Identification 11, 18
Schematic (Radio) 17
Schematic (TV) 2
Tube Placement Chart 5
Voltage and Resistance Measurements 8

FOR SERVICE INFORMATION ON RECORD CHANGER UNIT-SEE PHOTOFACT SET No. 107 FOLDER No. 13 OR RECORD CHANGER MANUAL CM-3.

HOWARD W. SAMS & CO., INC. • Indianapolis 1, Indiana

"The listing of any available replacement part herein does not constitute in any case a recommendation, warranty or guaranty by Howard W. Sams & Co., Inc., as to the quality and suitability of such replacement part. The numbers of these parts have been compiled from information furnished to Howard W. Sams & Co., Inc., by the manufacturers of the particular type of replacement part listed." "Reproduction or use, without express permission, of editorial or pictorial content, in any manner, is prohibited. No patent liability is assumed with respect to the use of the information contained herein. Copyright 1951 by Howard W. Sams & Co., Inc., Indianapolis, Indiana, U. S. of America. Copyright under International Copyright Union. All rights reserved under Inter-American Copyright Union (1910) by Howard W. Sams & Co., Inc." Printed in U. S. of America

DATE 2-51 SET 124 FOLDER 8

RAYTHEON MODELS C-1615A, B, 16A, B; C-1714B, 15A, B, 16A, B, 18A, 19A; M-1611A, B, 12A, B, 13A, B, 14A, B; M-1711A, B, 12A, B, 13A, B, 14A; RC-1618A, B, 19A, B, RC-1718B, 19B

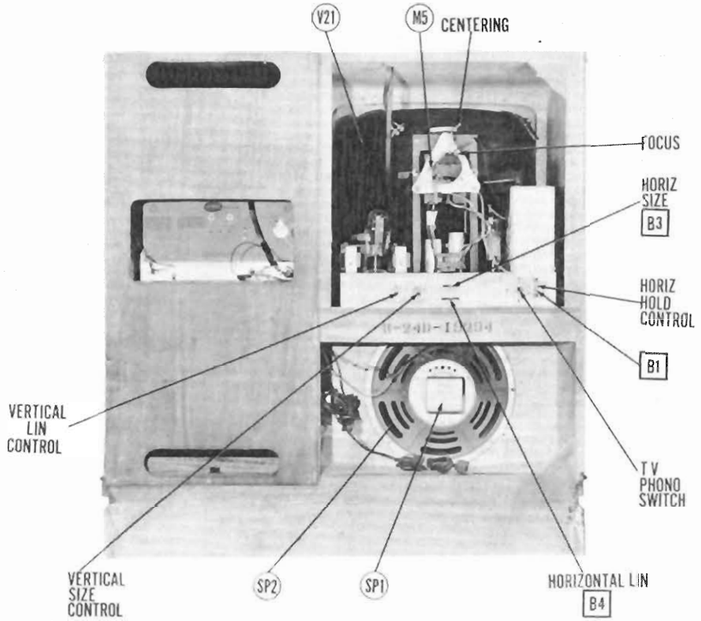

CABINET-REAR VIEW
HORIZONTAL SWEEP CIRCUIT ADJUSTMENTS

Turn the set on and tune in a TV station, preferably a test pattern.

Adjust the horizontal hold thumbscrew clockwise, until it reaches the stop and then two complete turns counter-clockwise.

Adjust the horizontal hold slug (B1) until the picture synchronizes horizontally.

Some models do not have a thumbscrew, on those models the slug is adjusted by means of a crimped eyelet on the end of the slug.

Adjust the horizontal size (B3) to minimum (extreme right, looking at rear of chassis.)

Adjust the horizontal linearity (B4) to minimum (extreme right.)

Turn the horizontal drive trimmer (B2) counter-clockwise until a fold over occurs as indicated by a vertical white line in the picture. Then turn the trimmer clockwise until the fold over disappears and then clockwise an additional 1/2 turn.

Adjust B3 until the picture fills the mask horizontally.

Adjust B4 until the picture is symmetrical from left to right.

DISASSEMBLY INSTRUCTIONS - MODEL RC-1718B

TV CHASSIS REMOVAL

1. Remove four push-on type control knobs.
2. Remove two 1/4" hex head metal screws, and two wood screws securing rear cover to cabinet. Remove rear cover.
3. Disconnect built-in antenna.
4. Disconnect speaker.
5. Remove five 1/4 x 20" bolts holding chassis to cabinet. Remove chassis.
6. Remove four 5/16" hex nuts from speaker. Remove speaker.

RADIO CHASSIS REMOVAL

1. Disconnect phonograph leads.
2. Remove three 1/4" hex head bolts from chassis.
3. Remove phono-radio drawer.
4. Remove radio chassis.

NOTE: FOR PICTURE TUBE REMOVAL, IT IS NECESSARY TO REMOVE TV CHASSIS AS OUTLINED ABOVE.

PHOTO
TRADE NAME
MANUFACTURER
TYPE SET
TUBES
POWER SUPPLY
RATING
TUNING RANGE
Alignment Instruc
Dial Cord Stringin
Disassembly Instr
Horiz. Sweep Cir
Parts List and De
Photographs
Cabinet-Rear V
Capacitor and A
Chassis-Top Vi
FOR SERVIC
CHANGER M
"The listing of any avai
case a recommendatior
as to the quality and su
parts have been compil
Inc., by the manufactur
"Reproduction or use,

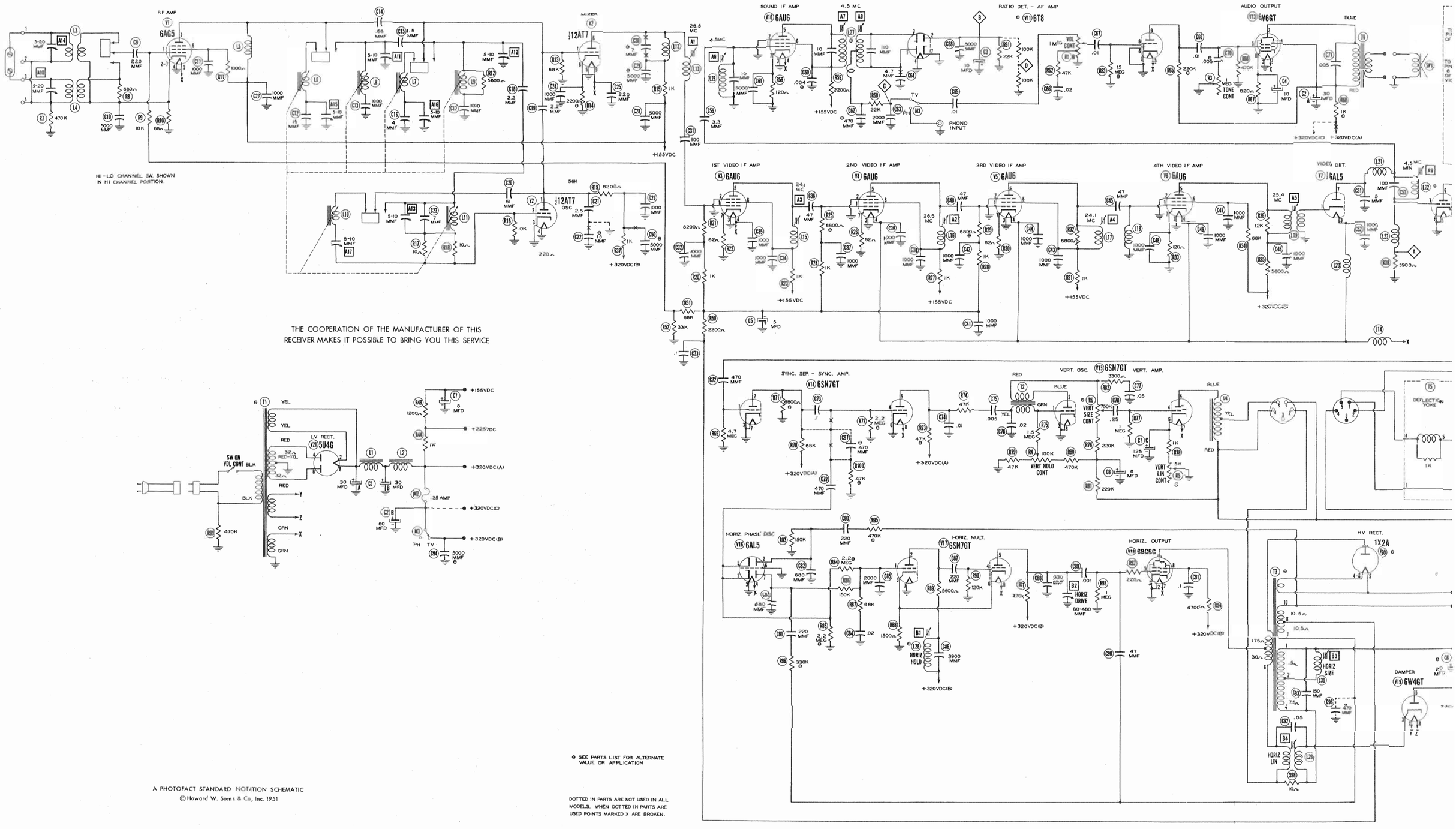

⊖ SEE PARTS LIST FOR ALTERNATE VALUE OR APPLICATION

DOTTED IN PARTS ARE NOT USED IN ALL MODELS. WHEN DOTTED IN PARTS ARE USED POINTS MARKED X ARE BROKEN.

A PHOTOFACT STANDARD NOTATION SCHEMATIC

©Howard W. Sams & Co, Inc. 1951

RAYTHEON MODELS C-1615A, B, 16A, B, C-1714B; 15A, B, 16A, B, 18A, 19A; M-1611A, B, 12A, B, 13A, B, 14A, B; M-1711A, B, 12A, B, 13A, B, 14A; RC-1618A, B, 19A, B, RC-1718B, 19B

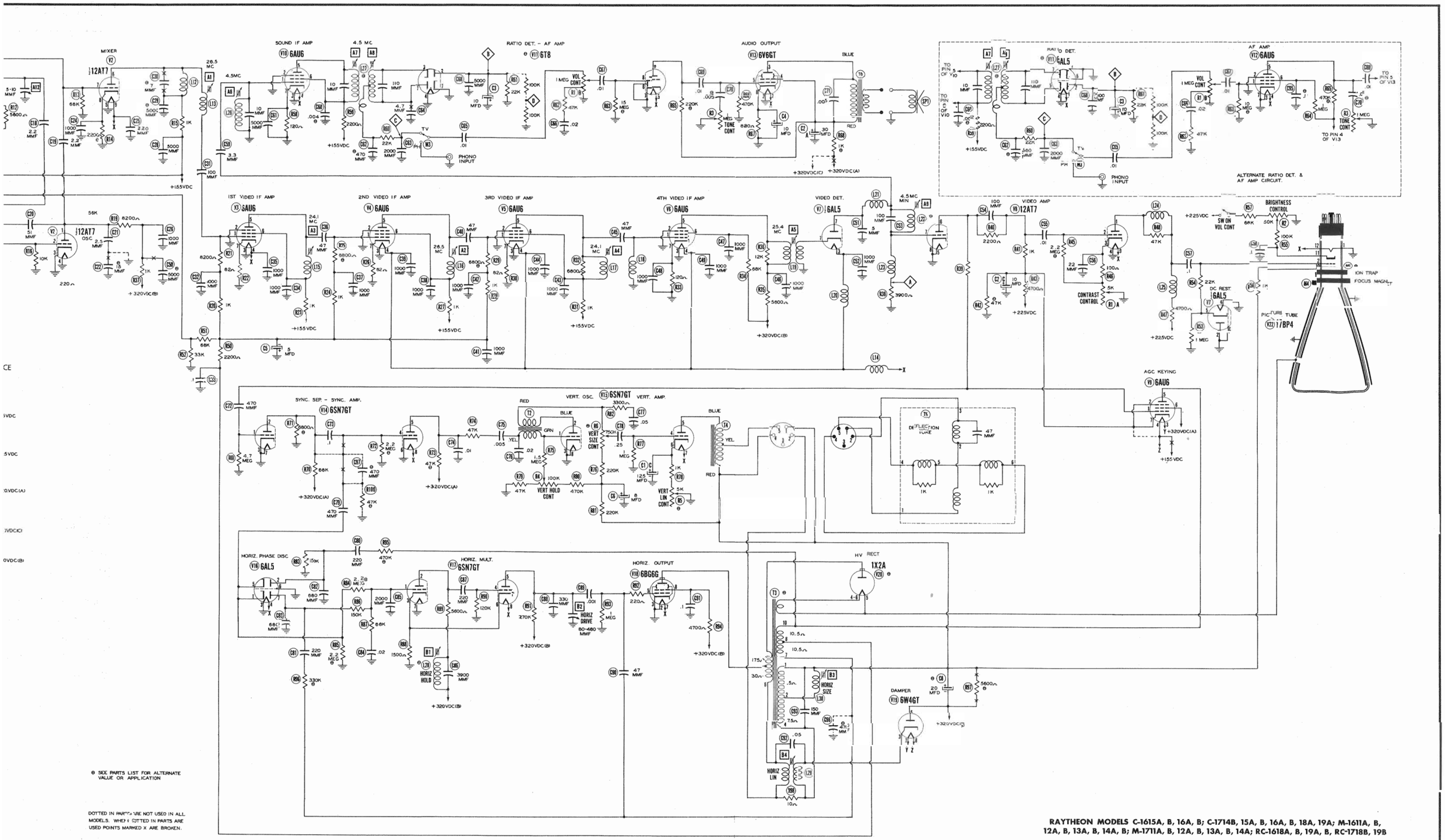

θ SEE PARTS LIST FOR ALTERNATE VALUE OR APPLICATION

DOTTED IN PARTS ARE NOT USED IN ALL MODELS. WHEN DOTTED IN PARTS ARE USED POINTS MARKED X ARE BROKEN.

RAYTHEON MODELS C-1615A, B, 16A, B; C-1714B, 15A, B, 16A, B, 18A, 19A; M-1611A, B, 12A, B, 13A, B, 14A, B; M-1711A, B, 12A, B, 13A, B, 14A; RC-1618A, B, 19A, B, RC-1718B, 19B

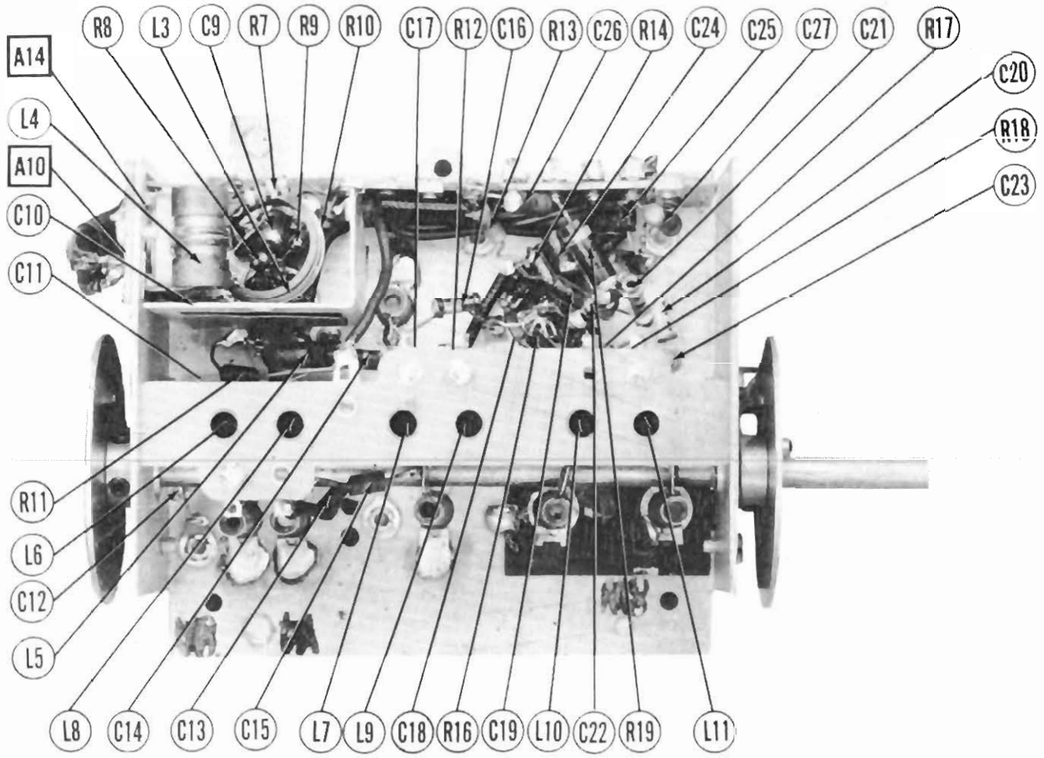

RF TUNER - BOTTOM VIEW

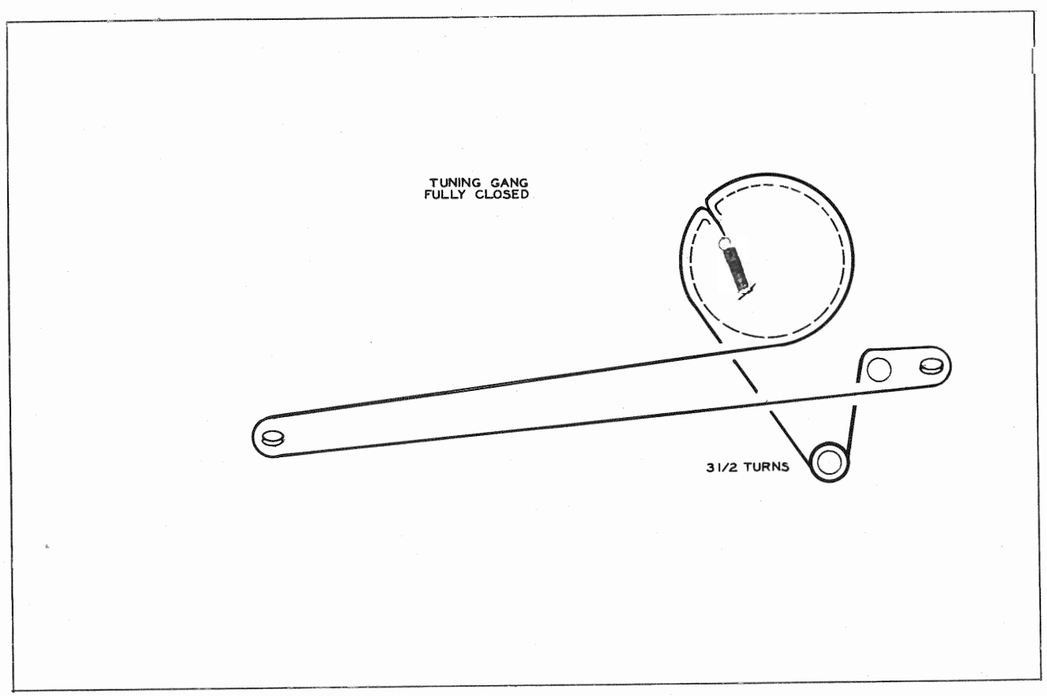

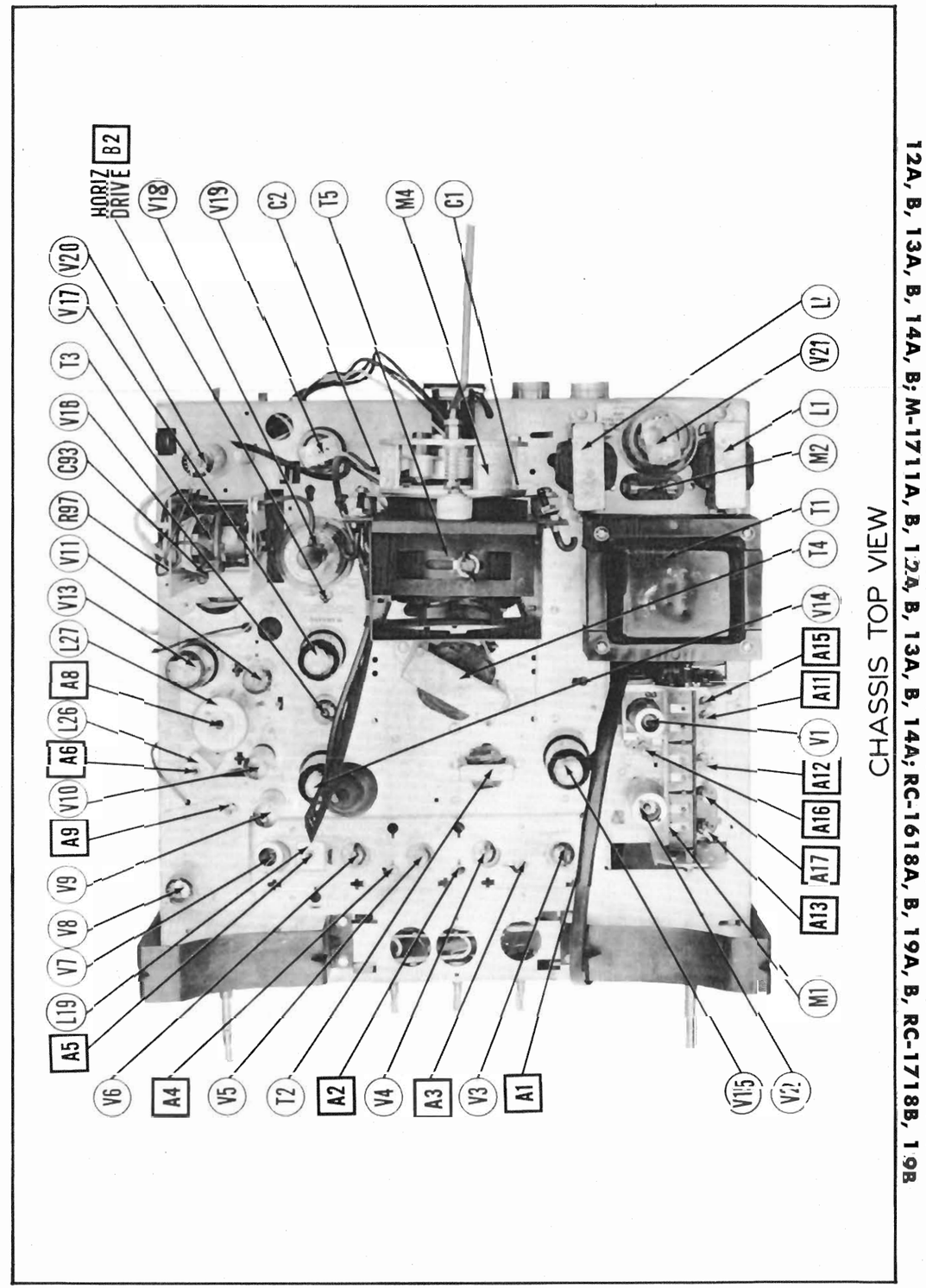

CHASSIS TOP VIEW

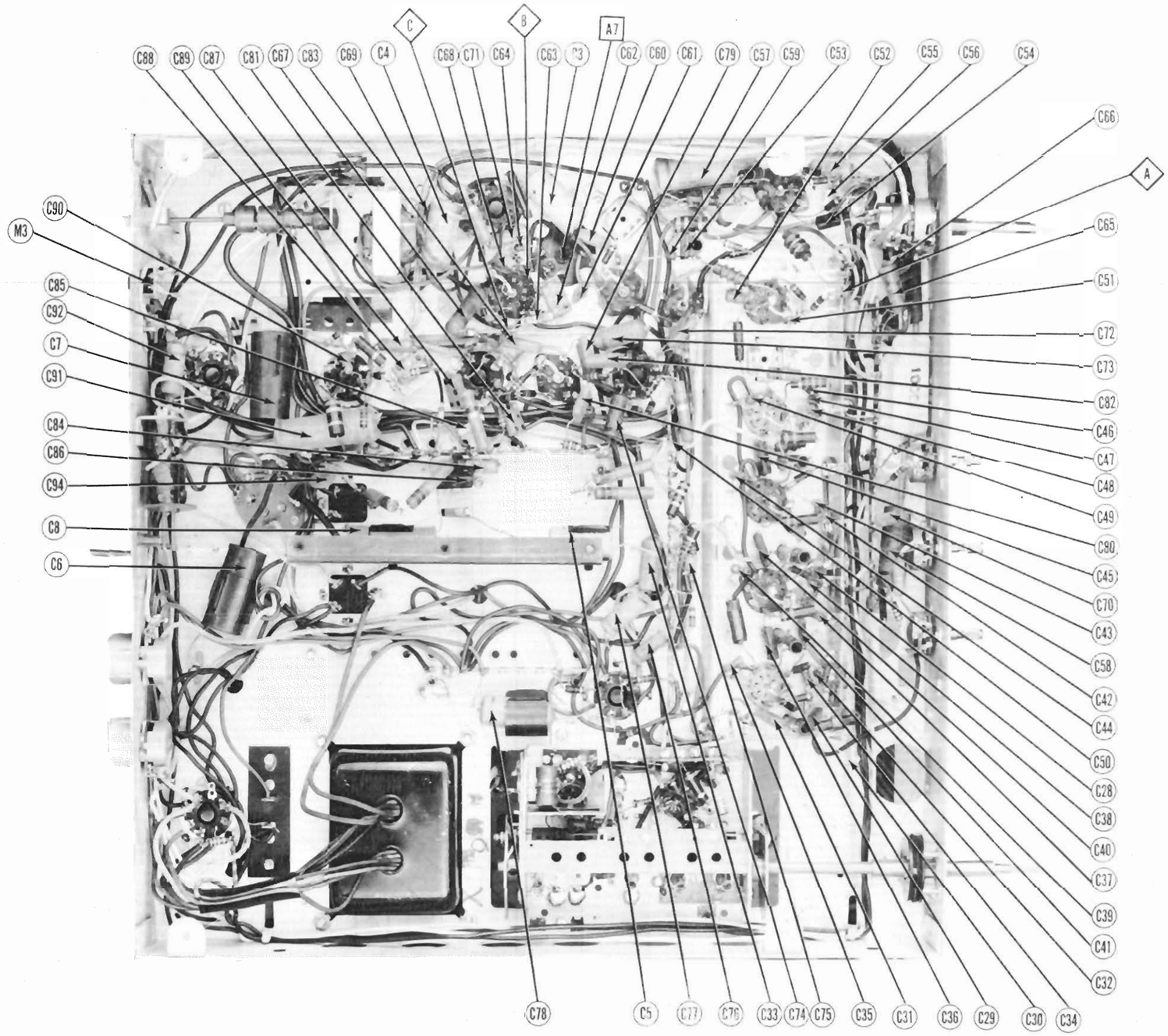

CHASSIS BOTTOM VIEW-CAPACITOR AND ALIGNMENT IDENTIFICATION

VOLTAGE AND RESISTANCE MEASUREMENTS

VOLTAGE READINGS

Item	Tube	Pin 1	Pin 2	Pin 3	Pin 4	Pin 5	Pin 6	Pin 7	Pin 8	Pin 9
V 1	6AG5	0V	.9VDC	6.3VAC	0V	155VDC	150VDC	.9VDC		
V 2	12AT7	225VDC	§-8.4VDC	0V	0V	0V	150VDC	0V	4.2VDC	6.3VAC
V 3	6AU6	-.1VDC	0V	0V	6.3VAC	150VDC	150VDC	.9VDC		
V 4	6AU6	-.1VDC	0V	0V	6.3VAC	150VDC	150VDC	.9VDC		
V 5	6AU6	-.1VDC	0V	0V	6.3VAC	150VDC	150VDC	.9VDC		
V 6	6AU6	0V	0V	0V	6.3VAC	250VDC	145VDC	1.2VDC		
V 7	6AL5	0V	0V	5.6VAC	0V	.4VDC	0V	-.4VDC		
V 8	12AT7	185VDC	.5VDC	35VDC	0V	0V	130VDC	-.3VDC	0V	6.3VAC
V 9	6AU6	130VDC	165VDC	¶ 155VDC	¶ 155VDC	-.4VDC	320VDC	165VDC		
V 10	6AU6	0V	0V	0V	6.3VAC	135VDC	135VDC	1VDC		
V 11	6T8	-.4VDC	-.8VDC	-.4VDC	0V	6.3VAC	0V	0V	-.6VDC	95VDC
V13	6V6GT	0V	0V	280VDC	295VDC	0V	320VDC	6.3VAC	20VDC	
V14	6SN7GT	-1.1VDC	33VDC	0V	-.7VDC	80VDC	0V	0V	6.3VAC	
V15	6SN7GT	-1VDC -5VDC	37VDC	0V	0V	300VDC	18VDC 10VDC	6.3VAC	0V	
V16	6AL5	2VDC	-2VDC	0V	6.3VAC	2VDC	0V	-.2VDC		
V17	6SN7GT	0V	275VDC	11VDC	-4.2VDC	100VDC	11VDC	0V	6.3VAC	
V18	6BG6G	0V	0V	0V	-20VDC	-20VDC	-.2VDC	6.3VAC	290VDC	TOP CAP *
V19	6W4GT	0V	0V	300VDC	0V	320VDC	300VDC	¶ 155VDC	¶ 155VDC	
V20	1X2A	* DO	NOT	MEASURE						
V21	5U4G	0V	330VDC	0V	340VAC	*	340VAC	*	330VDC	
V22	17BP4	0V	.5VDC	PIN 10 300VDC	PIN 100VDC	11 0V	PIN 12 6.3VAC			

§ TAKEN WITH VACUUM TUBE VOLTMETER
¶ 6.3VAC MEASURED ACROSS FILAMENTS
♦ 117VAC ACROSS PINS 5 AND 7 OF V21
* DO NOT MEASURE

RESISTANCE READINGS

Item	Tube	Pin 1	Pin 2	Pin 3	Pin 4	Pin 5	Pin 6	Pin 7	Pin 8	Pin 9
V 1	6AG5	43KΩ	68Ω	.1Ω	0Ω	†2.3KΩ	†3.3KΩ	68Ω		
V 2	12AT7	†9.3KΩ	10KΩ	0Ω	0Ω	0Ω	†3.3KΩ	68KΩ	2.2KΩ	.1Ω
V 3	6AU6	110KΩ	0Ω	0Ω	.1Ω	†3.3KΩ	†3.3KΩ	82Ω		
V 4	6AU6	110KΩ	0Ω	0Ω	.1Ω	†3.3KΩ	†3.3KΩ	82Ω		
V 5	6AU6	110KΩ	0Ω	0Ω	.1Ω	†3.3KΩ	†3.3KΩ	82Ω		
V 6	6AU6	2.3Ω	0Ω	0Ω	.1Ω	†5.6KΩ	†68KΩ	120Ω		
V 7	6AL5	.9Ω	0Ω	1.2Ω	0Ω	1Meg	0Ω	3.9KΩ		
V 8	12AT7	†5.8KΩ	2.2Meg	5KΩ	0Ω	0Ω	†9KΩ	3.9KΩ	0Ω	.1Ω
V 9	6AU6	†20KΩ	†5.8KΩ	†2.3 KΩ	2.3KΩ	105KΩ	†70Ω	†5.8KΩ		
V 10	6AU6	3.7Ω	0Ω	0Ω	.1Ω	†4.5KΩ	†4.5KΩ	120Ω		
V 11	6T8	Inf.	22KΩ	Inf.	0Ω	.1Ω	0Ω	0Ω	15Meg	1220KΩ
V13	6V6GT	Inf.	0Ω	†1.5KΩ	†1.1KΩ	470KΩ	†70Ω	.1Ω	820Ω	
V14	6SN7GT	4.7Meg	†30KΩ	0Ω	2.2Meg	†47KΩ	0Ω	0Ω	.1Ω	
V15	6SN7GT	1.5Meg 1.6Meg	†1.2Meg	0Ω	1Meg	†6.3KΩ	6KΩ 1KΩ	.1Ω	0Ω	
V16	6AL5	2.2Meg	150KΩ	0Ω	.1Ω	2.2Meg	0Ω	4.5Meg		
V17	6SN7GT	4.4Meg	†5.8KΩ	1.5KΩ	120KΩ	†270KΩ	1.5KΩ	0Ω	.1Ω	
V18	6BG6G	Inf.	0Ω	0Ω	1Meg	1Meg	105KΩ	.1Ω	†4.8KΩ	TOP CAP †5.8KΩ
V19	6W4GT	Inf.	Inf.	†5.7KΩ	Inf.	†70Ω	†5.7KΩ	†2.3KΩ	†2.3KΩ	
V20	1X2A	Inf.	Inf.	Inf.	Inf.	Inf.	Inf.	Inf.	Inf.	TOP CAP 16KΩ
V21	5U4G	Inf.	35KΩ	Inf.	32Ω	470KΩ	32Ω	470KΩ	35KΩ	
V22	17BP4	0Ω	1Meg	PIN 10 †6.7KΩ	PIN 140KΩ	11 100KΩ	PIN 12 .1Ω			

TV - PHONO SWITCH IN TV POSITION
† MEASURED FROM PIN 8 OF V21

1. DC Voltage measurements are at 20,000 ohms per volt; AC Voltage measured at 1,000 ohms.
2. Pin numbers are counted in a clockwise direction on bottom of socket.
3. Measured values are from socket pin to common negative unless otherwise stated.
4. Line voltage maintained at 117 volts for voltage readings.
5. Front panels controls set at minimum.
6. Where readings may vary according to the setting of the service controls, both minimum and maximum readings are given.

TUBE PLACEMENT CHART

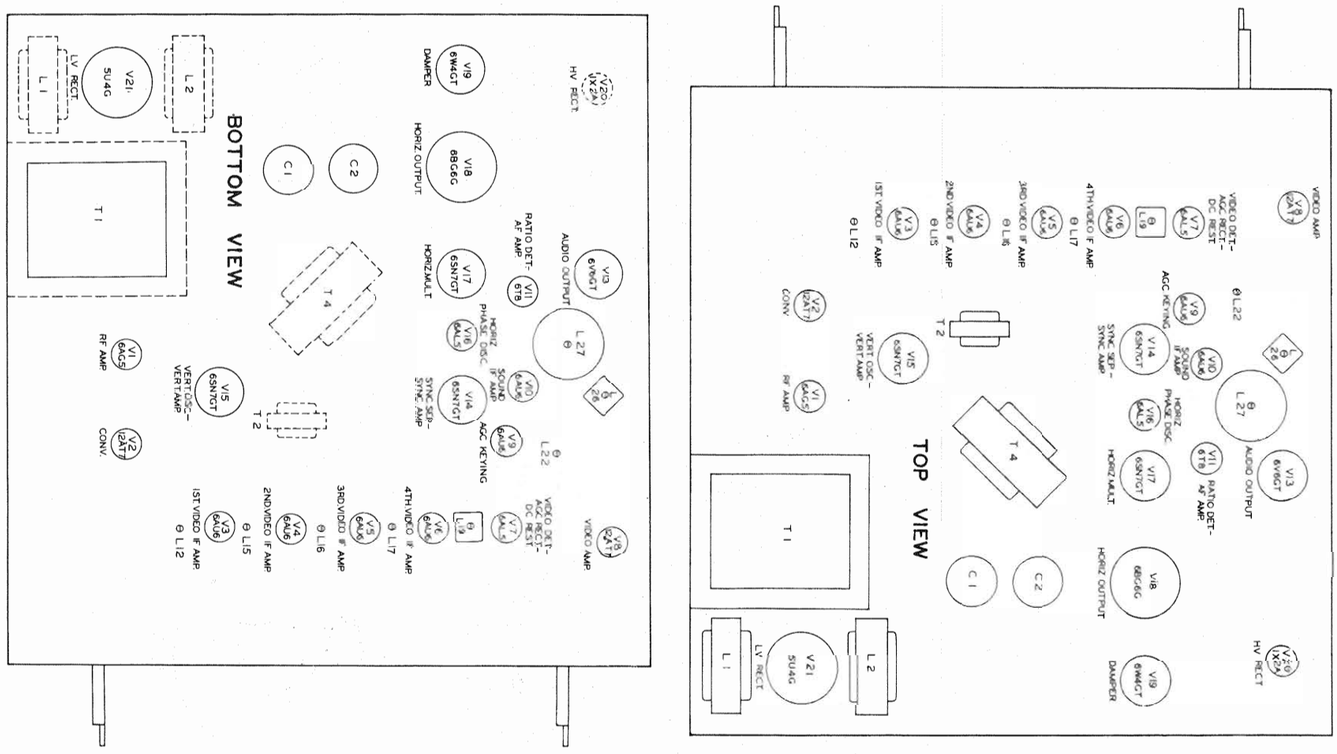

TV ALIGNMENT INSTRUCTIONS

ALIGNMENT INSTRUCTIONS—READ CAREFULLY BEFORE ATTEMPTING ALIGNMENT

The end of the high voltage lead should be securely taped and kept away from the chassis, do not remove the horizontal oscillator tube to disable the high voltage.

VIDEO IF ALIGNMENT

Remove the converter tube and replace it with a 12AT7 which has pin 1 removed; this will disable the local oscillator and eliminate the possibility of erroneous indications.
Turn the contrast control to maximum, (clockwise).

	DUMMY ANTENNA	SIGNAL GENERATOR COUPLING	SIGNAL GENERATOR FREQUENCY	CHANNEL	CONNECT VTVM	ADJUST	REMARKS
1.	Direct	High side to an ungrounded tube shield floating over dummy converter tube (V2). Low side to chassis.	26.5MC (Unmod.)	Any	DC probe to point (A). Common to chassis.	A1, A2	Adjust for maximum deflection. Attenuate signal generator to maintain 1 volt (above noise) reading.
2.	"	"	24.1MC	Any	"	A3, A4	"
3.	"	"	25.4MC	Any	"	A5	"

OVERALL VIDEO IF RESPONSE CHECK

	DUMMY ANTENNA	SWEEP GENERATOR COUPLING	SWEEP GENERATOR FREQUENCY	MARKER GENERATOR FREQUENCY	CHANNEL	CONNECT SCOPE	ADJUST	REMARKS
4.	Direct	High side to an ungrounded tube shield floating over dummy converter tube (V2). Low side to chassis.	24MC (10MC SWP)	23.75MC 26.75MC	Any	Vert. amp. to point (A). Low side to chassis.		Check for response curve similar to fig. 1. If necessary retouch A1 thru A5 for proper response.

SOUND IF ALIGNMENT USING AM SIGNAL GENERATOR AND VTVM

Connect two matched 100KΩ (± 1%) resistors in series from Point (B) to chassis. The junction fo these two resistors is alignment Point (D) as shown on the schematic.

	DUMMY ANTENNA	SIGNAL GENERATOR COUPLING	SIGNAL GENERATOR FREQUENCY	CHANNEL	CONNECT VTVM	ADJUST	REMARKS
5.	.001MFD	High side to pin 1 (cathode) of 6AL5 (V7). Low side to chassis.	4.5MC (Unmod.)	Any	DC probe to point (B). Common to chassis.	A6, A7	Adjust for maximum deflection.
6.	.001MFD	"	"	Any	DC probe to point (C). Common to point (D).	A8	Adjust for zero reading. A positive and negative reading will be obtained on either side of the correct setting.

SOUND IF ALIGNMENT USING FM SIGNAL GENERATOR AND OSCILLOSCOPE

Use frequency modulated signal with 60 ∿ modulation and 450KC sweep. Use 120 ∿ sawtooth voltage in scope for horizontal deflection.

	DUMMY ANTENNA	SWEEP GENERATOR COUPLING	SWEEP GENERATOR FREQUENCY	MARKER GENERATOR FREQUENCY	CHANNEL	CONNECT SCOPE	ADJUST	REMARKS
5.	.001MFD	High side to pin 1 (cathode) of 6AL5 (V7). Low side to chassis.	4.5MC (450KC SWP)	4.5MC	Any	Vert. amp. to point (B) Low side to chassis.	A6, A7	Disconnect stabilizer capacitor C3. Adjust for maximum amplitude and symmetry as per figure 2.
6.	"	"	"	"	"	Vert. amp. to point (C). Common to chassis.	A8	Reconnect capacitor C3. Adjust A8 so 4.5MC occurs at center of crossover lines as per figure 3. SLIGHTLY retouch A7 for max. amplitude and straightness of crossover lines.

4.5MC TRAP ADJUSTMENT

	DUMMY ANTENNA	SWEEP GENERATOR COUPLING	SWEEP GENERATOR FREQUENCY	MARKER GENERATOR FREQUENCY	CHANNEL	CONNECT SCOPE	ADJUST	REMARKS
7.	.001MFD	High side to pin 1 (cathode) of 6AL5 (V7). Low side to chassis.	Not used	4.5MC (400 ∿ mod.)	Any	Vert. amp. to pin 2 of picture tube. Low side to chassis.	A9	Adjust for minimum 400 ∿ indication on scope.

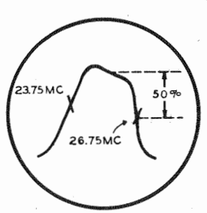

FIG.1

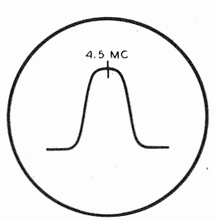

FIG. 2

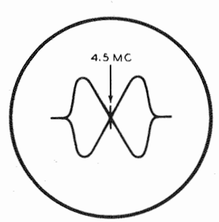

FIG. 3

TV ALIGNMENT INSTRUCTIONS (CONT.)

TUNER ALIGNMENT

Remove the dummy converter tube and replace the original 12AT7 in its socket.
Pre-set the adjustments as shown in figure 5.
Turn the tuning control until the tuning core carriage is at the top of its stroke. Pre-set the tuning cores 1.6 inches above the coil mounting strip. Turn the low band oscillator core (extreme front) an additional 4 turns out of the coil.

LOW BAND ALIGNMENT

Turn the tuning cores to the top of their stroke with the band switch in low band position (switch bar forward.)

	DUMMY ANTENNA	SWEEP GENERATOR COUPLING	SWEEP GENERATOR FREQUENCY	MARKER GENERATOR FREQUENCY	CHANNEL	CONNECT SCOPE	ADJUST	REMARKS
8.	Two 120Ω carbon resistors	Across antenna terminals with 120Ω in each lead.	85MC (10MC SWP)	83.25MC 87.75MC	6	Vert. amp. to point (A). Low side to chassis.	A10, A11, A12	Adjust for maximum amplitude of response.
9.	"	"	"	"	"	"	A13	Adjust to place the video marker at 50% response as shown in figure 4. If necessary repeat step 8.
10.	"	"	79MC (10MC SWP)	77.25MC 81.75MC	5	"		Adjust tuning control until the video marker on each channel is at 50% as per figure 4. If necessary readjust A11 and A12 for compromise which gives best overall response across the low band channels.
			69MC (10MC SWP)	67.25MC 71.75MC	4			
			63MC (10MC SWP)	61.25MC 65.75MC	3			
			57MC (10MC SWP)	55.25MC 59.75MC	2			

HIGH BAND ALIGNMENT

Turn the tuning cores to the top of their stroke with the switch in high band position (switch bar to the rear)

	DUMMY ANTENNA	SWEEP GENERATOR COUPLING	SWEEP GENERATOR FREQUENCY	MARKER GENERATOR FREQUENCY	CHANNEL	CONNECT SCOPE	ADJUST	REMARKS
11.	Two 120Ω carbon resistors	Across antenna terminals with 120Ω in each lead.	213MC (10MC SWP)	211.25MC 215.75MC	13	Vert. amp. to point (A). Low side to chassis.	A14, A15, A16	Adjust for maximum amplitude of response curve.
12.	"	"	"	"	13	"	A17	Adjust to place the video marker at 50% response as per figure 4.
13.	"	"	207MC (10MC SWP)	205.25MC 209.75MC	12	"		Adjust the tuning control until the video marker on each channel is at 50% as per fig. 4. If necessary readjust A15 and A16 for compromise which gives best overall response across the high band channel.
			201MC (10MC SWP)	199.25MC 203.75MC	11			
			195MC (10MC SWP)	193.25MC 197.75MC	10			
			189MC (10MC SWP)	187.25MC 191.75MC	9			
			183MC (10MC SWP)	181.25MC 185.75MC	8			
			177MC (10MC SWP)	175.25MC 179.75MC	7			

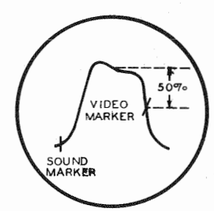

FIG.4

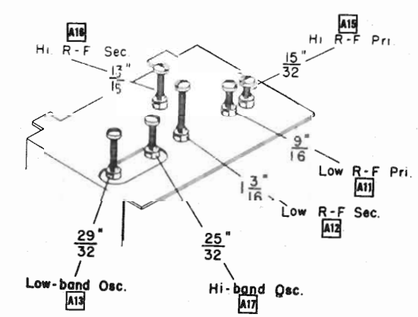

FIG.5

ALIGNING TRIMMERS

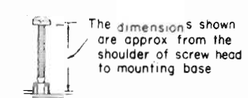

RADIO ALIGNMENT INSTRUCTIONS

ALIGNMENT INSTRUCTIONS—READ CAREFULLY BEFORE ATTEMPTING ALIGNMENT

To set pointer, turn tuning gang fully closed and set the right hand edge of the pointer carriage even with the calibration mark near the left hand edge of the pointer carriage slide.
Use isolation transformer if available. If not connect a .1MFD capacitor in series with low side of signal generator and B-.
Loop should be maintained in same relative position to chassis as when receiver is in cabinet.

	DUMMY ANTENNA	SIGNAL GENERATOR COUPLING	SIGNAL GENERATOR FREQUENCY	BAND SWITCH POS.	RADIO DIAL SETTING	OUTPUT METER	ADJUST	REMARKS
14.	.1MFD	High side to pin 7 (grid) of 12BE6 (V22). Low side to B-.	455KC (400 ∿ Mod.)	None	Tuning gang fully open.	Across voice coil.	A18, A19, A20, A21	Adjust for maximum output. If isolation transformer is not used, reduce dummy antenna to .001MFD to reduce hum modulation.
15.	"	"	1620KC	"	"	"	A22	"
16.		Loop	1400KC	"	Tune for max. output.	"	A23	Fashion loop of several turns of wire and radiate signal into loop of receiver. Adjust for maximum output.

RAYTHEON MODELS C-1615A, B, 16A, B; C-1714B, 15A, B, 16A, B, 18A, 19A; M-1611A, B, 12A, B, 13A, B, 14A, B; M-1711A, B, 12A, B, 13A, B, 14A; RC-1618A, B, 19A, B, RC-1718B, 19B

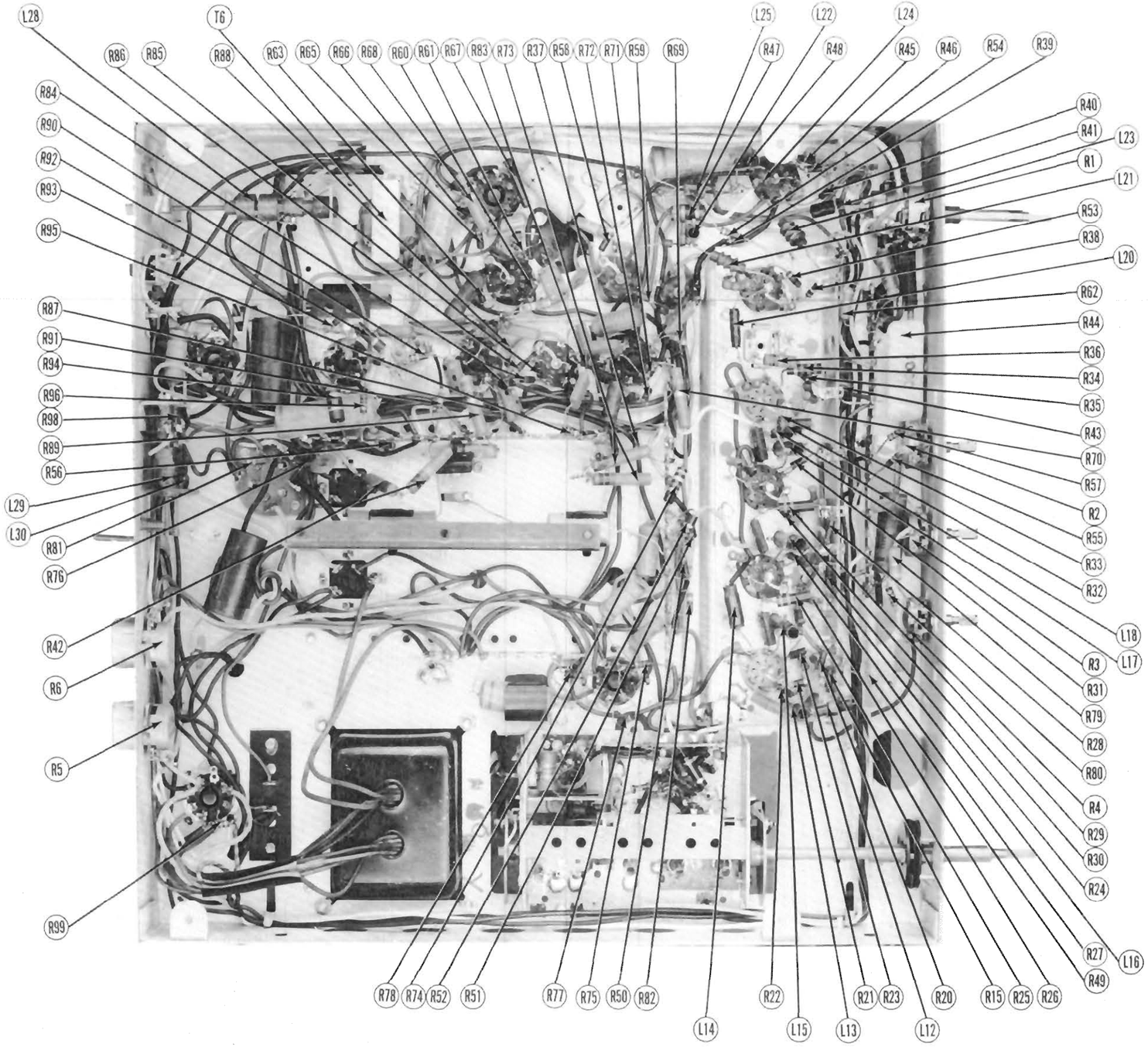

CHASSIS BOTTOM VIEW-RESISTOR AND INDUCTOR IDENTIFICATION

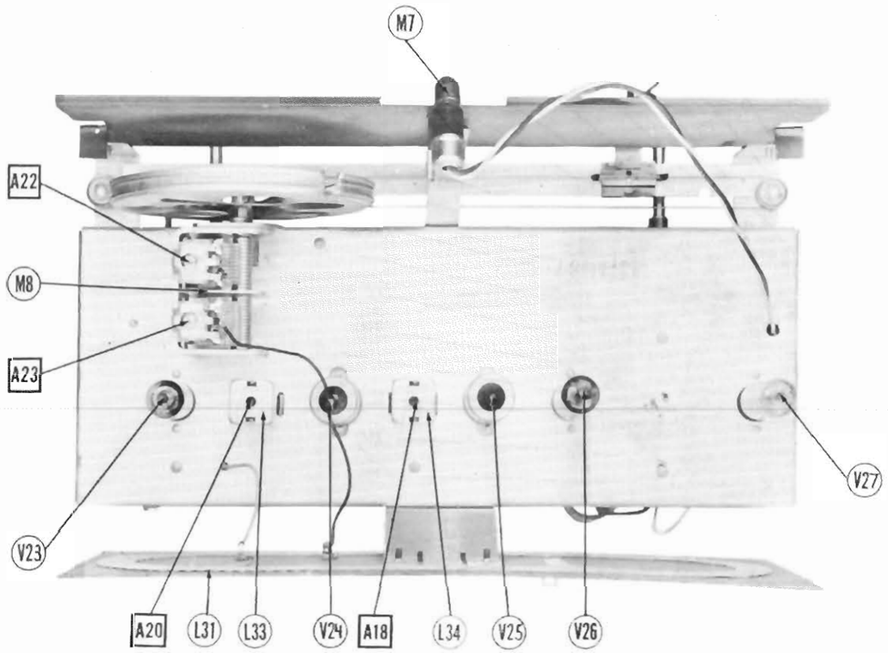

RADIO CHASSIS-TOP VIEW

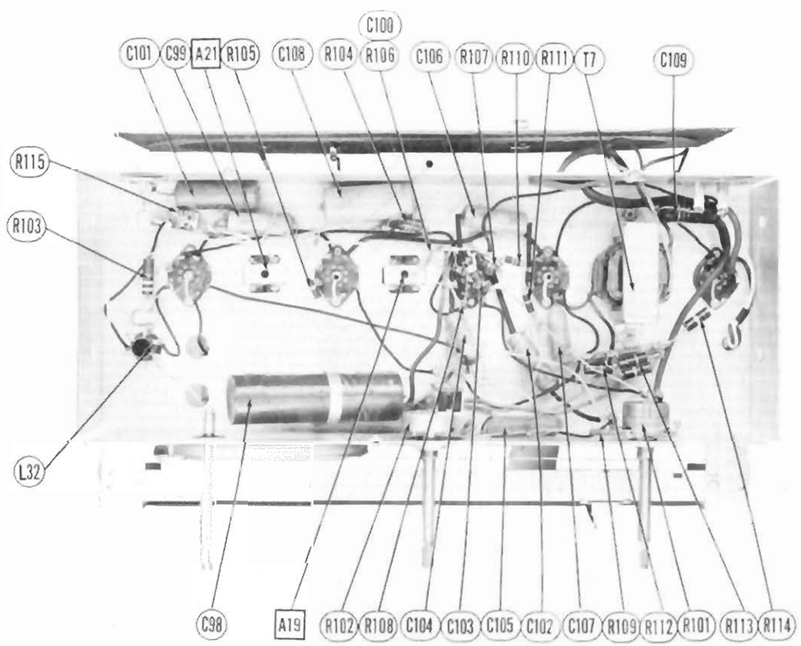

RADIO CHASSIS-BOTTOM VIEW

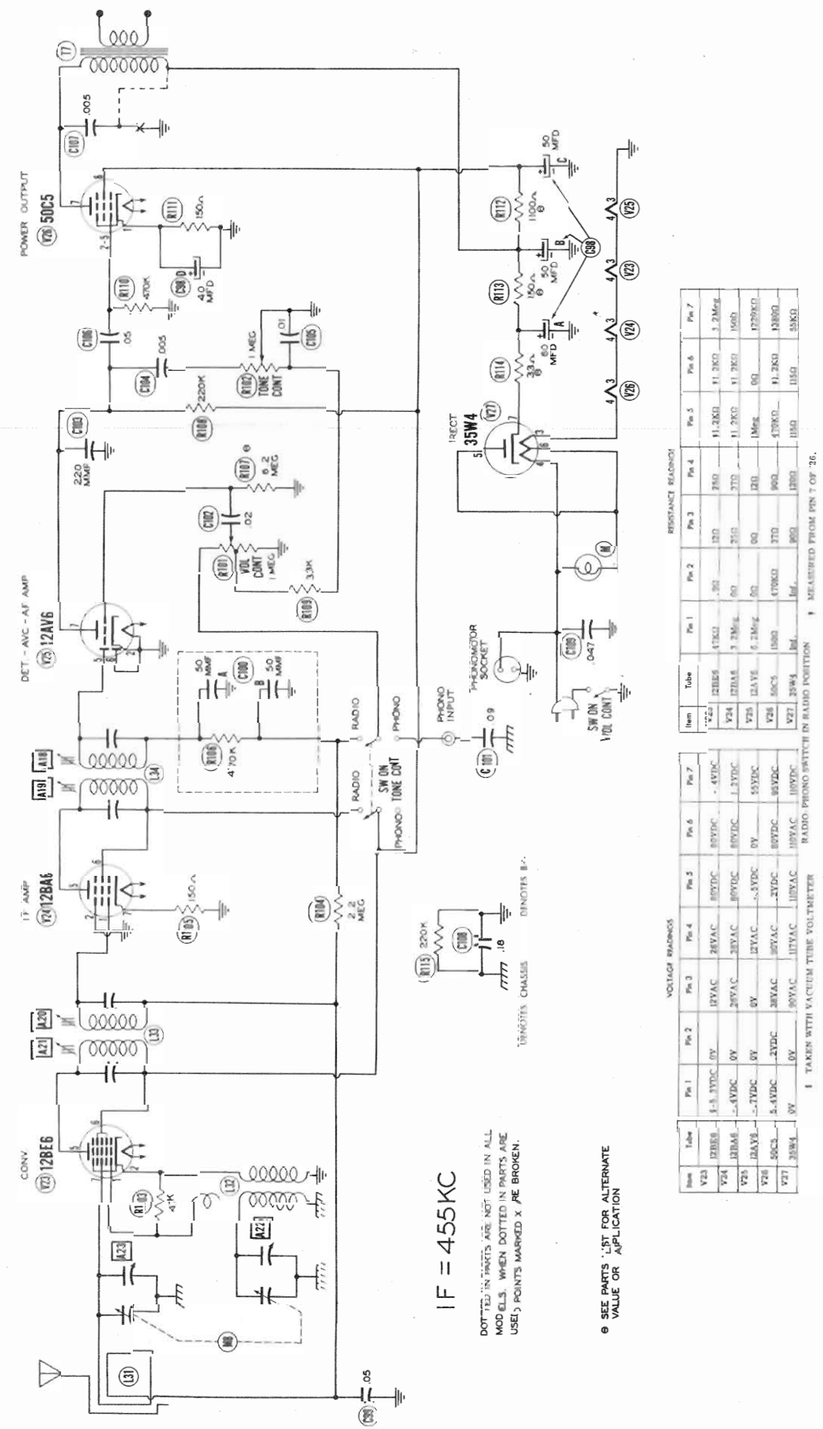

RADIO SCHEMATIC

RAYTHEON MODELS C-1615A, B, 16A, B, C-1714B; 15A, B, 16A, B, 18A, 19A; M-1611A, B, 12A, B, 13A, B, 14A, B; M-1711A, B, 12A, B, 13A, B, 14A; RC-1618A, B, 19A, B, RC-1718B, 19B

RAYTHEON MODELS C-1615A, B, 16A, B; C-1714B, 15A, B, 16A, B, 18A, 19A; M-1611A, B, 12A, B, 13A, B, 14A, B; M-1711A, B, 12A, B, 13A, B, 14A; RC-1618A, B, 19A, B, RC-1718B, 19B

RADIO PARTS LIST AND DESCRIPTIONS

TUBES (SYLVANIA or Equivalent)

ITEM No.	USE	REPLACEMENT DATA: RAYTHEON PART No.	REPLACEMENT DATA: STANDARD REPLACEMENT	RMA BASE TYPE	NOTES
V23	Converter	12BE6	12BE6	7CH	
V24	IF Amplifier	12BA6	12BA6	7BK	
V25	Det.-AVC-AF Amp.	12AV6	12AV6	7BT	
V26	Power Output	50C5	50C5	7CV	
V27	Rectifier	35W4	35W4	5BQ	

CAPACITORS

Capacity values given in the rating column are in mfd. for Electrolytic and Paper Capacitors, and in mmfd. for Mica and Ceramic Capacitors.

ITEM No.	RATING: CAP.	RATING: VOLT	REPLACEMENT DATA: RAYTHEON PART No.	AEROVOX PART No.	CENTRALAB PART No.	CORNELL-DUBILIER PART No.	ERIE PART No.	SPRAGUE PART No.	IDENTIFICATION CODES AND INSTALLATION NOTES
C98A	60	150	A-8C-19085	AF161G10D4A		EZ555I5C		TVA-2453 USE TWO	Filter Red
B	50	150							Filter Yellow
C	50	150							Filter Blue
D	40	25							Output Cathode Green
C99	.05	200	C-8D-10770	P288-05	DF-503	PTE4S5		2TM-S5	AVC Filter
C100A	50		*A-201-15005	SI50	*PC-50	5W5Q5	GP1K-50	19C28	Diode RF Filter
B	50			SI50		5W5Q5	GP1K-50	19C28	Diode RF Filter
C101	.09	400	C-8D-11251	P488-1	DF-104	PTE4P1		4TM-P1	Phono Isolation
C102	.02	400	C-8D-11304	P488-02	DF-203	PTE4S2		4TM-S2	Audio Coupling
C103	220		C-8G-14459	SI220	D6-221	5W5T25	GP2K-220	19C13	AF Amp. Plate
C104	.005	600	C-8D-10935	P688-005	D6-502	PTE6D5	811-005	6TM-D5	Tone Comp.
C105	.01	400	C-8D-10761	P488-01	D6-103	PTE4S1	821-01	4TM-S1	Tone Comp.
C106	.05	200	C-8D-10770	P288-05	DF-503	PTE4S5		2TM-S5	Audio Coupling
C107	.005	600	C-8D-10935	P688-005	D6-502	PTE6D5	811-005	6TM-D5	Output Plate
C108	.18	400	C-8D-11111	P488-22		GT4P2		72P53	Line Isolation
C109	.047	400	C-8J-16081	P488-047	DF-503	PTE4S5		4TM-S47	Line Filter

* Items C100A, C100B, and R106 are combined into one unit.

CONTROLS

ITEM No.	RATING: RESISTANCE	RATING: WATTS	REPLACEMENT DATA: RAYTHEON PART No.	IRC PART No.	CLAROSTAT PART No.	CENTRALAB PART No.	INSTALLATION NOTES
R101A	1Meg	½	A-10A-19005	QI8-137X	AK-111	BTSK-72-S	Volume control - tapped @ 100KΩ
B	Shaft		Not req.	Not req.	KSS-3	Not req.	Attach to R101A per instructions.
C	Switch		Not req.	T6-1	SWB	Not req.	Attach to R101A per instructions.
R102	1Meg	½	A-11A-19004				Tone control and Radio-Phono SW

RESISTORS

ITEM No.	RATING: RESISTANCE	RATING: WATTS	REPLACEMENT DATA: RAYTHEON PART No.	IRC PART No.	IDENTIFICATION CODES
R103	47KΩ	1	C-9B1-82		Mixer Grid
R104	2.2Meg	½	C-9B1-33	BTS-2.2Meg	AVC Network
R105	150Ω	½	C-9B1-52	BTS-150	IF Amp. Cathode
R106	47KΩ	½	A-201-15005 *	BTS-47K	Diode Filter
R107	6.8Meg	½	C-9B1-36	BTS-6.8Meg	AF Amp. Grid - See Note 12
R108	220KΩ	½	C-9B1-90	BTS-220K	AF Amp. Plate
R109	33KΩ	½	C-9B1-80	BTS-33K	Tone Compensation
R110	470KΩ	½	C-9B1-29	BTS-470K	Output Grid
R111	150Ω	½	C-9B1-52	BTS-150	Output Cathode
R112	1000Ω	1	C-9B2-62	BTA-1000	Filter - See Note 12
R113	150Ω	1	C-9B2-52	BTA-150	Filter - See Note 15
R114	33Ω	1			Surge Limiter - See Note 14
R115	220KΩ	½	C-9B1-90	BTS-220K	Isolation

* Items R106, C100A and C100B are combined into one unit.
Note 12. Some models use 6.2meg resistor in this application.
Note 13. Some models use 1100Ω resistor in this application.
Note 14. Some models use 27Ω resistor in this application.
Note 15. Some models use parallel resistors in this application.

TRANSFORMER (AUDIO OUTPUT)

ITEM No.	RATING: IMPEDANCE PRI.	RATING: IMPEDANCE SEC.	RATING: DC RES. PRI.	RATING: DC RES. SEC.	REPLACEMENT DATA: RAYTHEON PART No.	STANCOR PART No.	MERIT PART No.	CHICAGO PART No.	INSTALLATION NOTES
T7	5.5KΩ	4Ω	200Ω	.6Ω	BI2C-19009	A-3877 ①	A-3019	RO-9 ①	① Drill one new mtg hole.

COILS (RF-IF)

ITEM No.	USE	DC RES. PRI.	DC RES. SEC.	REPLACEMENT DATA: RAYTHEON PART No.	MEISSNER PART No.	NOTES
L31	Loop Antenna	2.3Ω		C-13E-19087		
L32	Osc. Coil	.9Ω	6Ω	B-13D-19064		
L33	1st IF	16Ω	16Ω	B-13B-17731		
L34	2nd IF	16Ω	16Ω	B-13B-17731		

PHONO CARTRIDGE and NEEDLE

ITEM No.	RAYTHEON PART No.	ASTATIC PART No. CARTRIDGE	ASTATIC PART No. NEEDLE	SHURE PART No. CARTRIDGE	SHURE PART No. NEEDLE	ELECTRO-VOICE PART No. CARTRIDGE	ELECTRO-VOICE PART No. NEEDLE	REMARKS
M6		AC-AG-1	A-AG	W26B	A66U	33	O-2 or S-2	

ASTATIC, SHURE AND ELECTRO-VOICE NEEDLE LISTINGS SHOWN ABOVE ARE SPECIFIED FOR THE RESPECTIVE REPLACEMENT CARTRIDGES LISTED.

DIAL LIGHTS

ITEM No.	BASE TYPE	VOLTS	AMPS.	BEAD COLOR	REPLACEMENT DATA: RAYTHEON PART No.		NOTES
M7	Bayonet	6-8	.15	Brown			Type # 47

MISCELLANEOUS

ITEM No.	PART NAME	PART No.	NOTES
M8	Tuning Capacitor	B-8A-18997	30-496MMF, 26-197MMF
	Dial Scale	B-30A-19432	
	Escutcheon	B-2G-18929	
	Knob	B-5B-18877-'6	With line (mahogany)
	Knob	B-5B-18877-'5	With line (blond)
	Knob	B-5B-18876-'6	Mahogany
	Knob	B-5B-18876-'6	Blond

TV PARTS LIST AND DESCRIPTIONS

TUBES (SYLVANIA or Equivalent)

ITEM No.	USE	REPLACEMENT DATA: RAYTHEON PART No.	REPLACEMENT DATA: STANDARD REPLACEMENT	RMA BASE TYPE	NOTES
V1	RF Amp.	6AG5	6AG5	7BD	
V2	Converter	12AT7	12AT7	9A	
V3	1st Video IF Amp.	6AU6	6AU6	7BK	
V4	2nd Video IF Amp.	6AU6	6AU6	7BK	
V5	3rd Video IF Amp.	6AU6	6AU6	7BK	
V6	4th Video IF Amp.	6AU6	6AU6	7BK	
V7	Video Det.-AGC Rect.-DC Rest.	6AL5	6AL5	6BT	
V8	Video Amp.	12AT7	12AT7	9A	
V9	AGC Keying	6AU6	6AU6	7BK	
V10	Sound IF Amp.	6AU6	6AU6	7BK	
V11A	Ratio Det.-AF Amp.	6T8	6T8	9E	
B	Ratio Det.	6AL5	6AL5	6BT	
V12	AF Amp.	6AU6	6AU6	7BK	
V13	Audio Output	6V6GT	6V6GT	7AC	
V14	Sync. Sep.-Sync. Amplifier	6SN7GT	6SN7GT	8BD	
V15	Vert. Osc.-Vert. Amplifier	6SN7GT	6SN7GT	8BD	
V16	Hor. Phase Discr.	6AL5	6AL5	6BT	
V17	Horiz. Mult.	6SN7GT	6SN7GT	8BD	
V18	Horiz. Output	6BG6G	6BG6G	5BT	
V19	Damper	6W4GT	6W4GT	4CG	
V20A	H.V. Rectifier	1X2A	1X2A	7CB	
B	H.V. Rectifier	1X2	1X2	7CB	
V21	L.V. Rectifier	5U4G	5U4G	5T	
V22	Picture Tube	17BP4	17BP4	12D	

CAPACITORS

Capacity values given in the rating column are in mfd. for Electrolytic and Paper Capacitors, and in mmfd. for Mica and Ceramic Capacitors.

ITEM No.	RATING: CAP.	RATING: VOLT	REPLACEMENT DATA: RAYTHEON PART No.	AEROVOX PART No.	CENTRALAB PART No.	CORNELL-DUBILIER PART No.	ERIE PART No.	SPRAGUE PART No.	IDENTIFICATION CODES AND INSTALLATION NOTES
C1A	30	450	A-8C-18487	AF661J25A		UPT409		TVL-3741	▬ Filter
B	30	450						TVA-1207	■ Filter
C	125	25							▲ Vert. Output Cath.
C2A	30	450	A-8C-17845	AFH3666J		UPT36145		TVL-3790	▬ Filter
B	60	450							■ Filter
C	10	450							▲ Decoupling
C3	10	50	A-8C-17183	PRS50/10		BR105		TVA-1304	Stabilizing Cap
C4	10	50	A-8C-19564	PRS50/10		BR105		TVA-1304	Output Cath. Bypass
C5	5	50	A-8C-19424	PRS150/4		BR554		TVA-1303	AGC Filter
C6	8	450	A-8C-13453	PRS450/8		BR844A		TVA-1704	Decoupling
C7	8	450	A-8C-13453	PRS450/8		BR844A		TVA-1704	Decoupling
C8	20	150	A-8C-19546	PRS150/20		BR2015A		TVA-1410	Decoupling ♦
C9	220		C-8G-16045	SI220	D6-221		GP2K-220	19C13	RF Coupling
C10	5000		A-8G-13962	BPD-005	DD-502		811-005	811-005	RF Amp. Cath.
C11	1000		C-8G-13201	SI1000	D6-102		GP2L-001	19C1	RF Amp. Screen
C12	15		C-8G-13017		TCZ-15		NPOK-15	19C5	Fixed Trimmer
C13	1000		C-8G-13201	SI1000	D6-102		GP2L-001	19C1	RF Bypass
C14	.68		A-8G-12495-1		TCZ-.68				RF Coupling
C15	1.5		A-8G-12495-8	SI1.5NPO	TCZ-1.5		NPOK-1.5		RF Coupling
C16	4		C-8G-19314						Fixed Trimmer
C17	1000		C-8G-13201	SI1000	D6-102		GP2L-001	19C1	RF Bypass
C18	2.2		A-8G-12495-4		TCZ-2.2				Osc. Coupling
C19	2.2		A-8G-12495-4		TCZ-2.2				Osc. Coupling
C20	51		C-8G-11891		TCN-51		N750L-51		Osc. Feedback
C21	2.5		C-8G-19569						Fixed Trimmer
C22	15		C-8G-13017		TCZ-15		NPOK-15	19C5	Fixed Trimmer †
C23	7		C-8G-19572				N750K-7		Fixed Trimmer
C24	1000		C-8G-13201	SI1000	D6-102		GP2L-001	19C1	Conv. Cath.
C25	220		C-8G-16045	SI220	D6-221		GP2K-220	19C13	Conv. Fil.
C26	1000		C-8G-13201	SI1000	D6-102		GP2L-001	19C1	RF Bypass
C27	1000		C-8G-13201	SI1000	D6-102		GP2L-001	19C1	RF Bypass
C28	5000		A-8G-13962	BPD-005	DD-502	ID5D5	811-005	29C1	RF Bypass
C29	5000		A-8G-13962	BPD-005	DD-502	ID5D5	811-005	29C1	Conv. Plate Dec. §
C30	7		C-8G-11790	SI6.8NPO	TCZ-6.8		NPOK-6.8		Fixed Trimmer †
C31	100	500	C-8F3-8	1468-0001	D6-101	5W5T1	GP1K-100	1FM-31	IF Coupling
C32	1000		C-8G-13201	SI1000	D6-102	1W5D1	GP2L-001	19C1	AGC Filter
C33	.1	200	C-8D-17259	P288-1	DF-104	PTE4P1		2TM-P1	AGC Filter
C34	1000		C-8G-13201	SI1000	D6-102	1W5D1	GP2L-001	19C1	1st V. IF Dec.
C35	1000		C-8G-13201	SI1000	D6-102	1W5D1	GP2L-001	19C1	1st V. IF Fil.
C36	47	500	C-8F3-109	1468-00005	D6-470	5W5Q5	GP1K-47	1FM-45	IF Coupling
C37	1000		C-8G-13201	SI1000	D6-102	1W5D1	GP2L-001	19C1	AGC Filter
C38	1000		C-8G-13201	SI1000	D6-102	1W5D1	GP2L-001	19C1	2nd V. IF Dec.
C39	1000		C-8G-13201	SI1000	D6-102	1W5D1	GP2L-001	19C1	2nd V. IF Fil.
C40	47	500	C-8F3-109	1468-00005	D6-470	5W5Q5	GP1K-47	1FM-45	IF Coupling
C41	1000		C-8G-13201	SI1000	D6-102	1W5D1	GP2L-001	19C1	AGC Filter
C42	1000		C-8G-13201	SI1000	D6-102	1W5D1	GP2L-001	19C1	AGC Filter
C43	1000		C-8G-13201	SI1000	D6-102	1W5D1	GP2L-001	19C1	3rd V. IF Dec.
C44	1000		C-8G-13201	SI1000	D6-102	1W5D1	GP2L-001	19C1	3rd V. IF Fil.
C45	47	500	C-8F3-109	1468-00005	D6-470	5W5Q5	GP1K-47	1FM-45	
C46	1000		C-8G-13201	SI1000	D6-102	1W5D1	GP2L-001	19C1	4th V. IF Plate Dec.
C47	1000		C-8G-13201	SI1000	D6-102	1W5D1	GP2L-001	19C1	4th V. IF Screen
C48	1000		C-8G-13201	SI1000	D6-102	1W5D1	GP2L-001	19C1	4th V. IF Cath.
C49	1000		C-8G-13201	SI1000	D6-102	1W5D1	GP2L-001	19C1	4th V. IF Fil.
C50	5000		A-8G-13962	BPD-005	DD-502	ID5D5	811-005	29C1	RF Bypass ♦
C51	5		C-8G-12166	SI5NPO	TCZ-4.7	5R5V5	NPOK-5	MS-55	V. Diode Filter
C52	1000		C-8G-13201	SI1000	D6-102	1W5D1	GP2L-001	19C1	V. Det.-DC Res. Fil.
C53	10	500	C-8F1-113	1469-0001	TCZ-10	5R5T1	NPOM-100	MS-31	Fixed Trimmer
C54	10	500	C-8F1-113	1469-0001	TCZ-10	5R5T1	NPOM-100	MS-31	Peaking
C55	.01	400	C-8D-17270	P488-1	D6-103	PTE4S1	821-01	4TM-S1	Video Coupling
C56	22		C-8G-11892	SI22	D6-220	5W5Q25	GP1K-22	19C23	V. Amp. Cath.
C57	.1	600	C-8D-17990	P688-1	DF-104	PTE6P1		6TM-P1	Video Coupling
C58	.1	400	C-8D-18861	P488-1	DF-104	PTE4P1		4TM-P1	Pic. Tube Cath.
C59	3.3		A-8G-12495-5	SI3.3NPO	TCZ-3.3		NPOK-3.3		S. IF Coupling
C60	.004	400	C-8D-17958	P688-004	D6-402	PTE6D4	GP2M-004	6TM-D4	S. IF Dec. Note 1
C61	5000		A-8G-13962	BPD-005	DD-502	ID5D5	811-005	29C1	S. IF Cath.
C62	470	500	C-8F1-121	1468-0005	D6-471	5W5T5	GP2K-470	1FM-31	Diode Lead Cap Note 2
C63	2000		C-8G-19522	SI2000	D6-202	1W5D2	GP2M-002	29C2	De-emplasis
C64	4.7		A-8G-12495-6	SI4.7NPO	TCZ-4.7	5R5V5	NPOK-4.7	MS-55	Balancing †
C65	.01	200	C-8D-17258	P488-01	D6-103	PTE4S1	821-01	4TM-S1	Audio Coupling

RAYTHEON MODELS C-615A, B, 16A, B; C-1714B, 15A, B, 16A, B, 18A, 19A; M-1611A, B, 12A, B, 13A, B, 14A, B; M-1711A, B, 12A, B, 13A, B, 14A; RC-1618A, B, 19A, B, RC-1718B, 19B

TV PARTS LIST AND DESCRIPTIONS (Continued)

CAPACITORS (CONT.)

ITEM No.	RATING CAP.	RATING VOLT	REPLACEMENT DATA Raytheon PART No.	AEROVOX PART No.	CENTRALAB PART No.	CORNELL-DUBILIER PART No.	ERIE PART No.	SPRAGUE PART No.	IDENTIFICATION CODES AND INSTALLATION NOTES
C66	.02	200	C-8D-17268	P488-02	DF-203	PTE4S2		2TM-S2	Tone Comp.
C67	.01	200	C-8D-17258	P488-01	D6-103	PTE4S1	821-01	4TM-S1	Audio Coupling
C68	5000		A-8G-13962	BPD-005	DD-502	ID5D5	811-005	29C1	RF Bypass
C69	.01	400	C-8D-17270	P488-01	D6-103	PTE4S1	821-01	4TM-S1	Audio Coupling
C70	.005	200	C-8D-17785	P688-005	D6-502	PTE6D5	811-005	6TM-D5	Tone Comp. Note 3
C71	.005	600	C-8D-19258	P688-005	D6-502	PTE6D5	811-005	6TM-D5	Output Plate
C72	470	500	C-8F3-121	1469-0005	D6-471	5R5T5	GP2K-470	MS-35	Sync. Coupling
C73	.1	200	C-8D-17259	P288-1	DF-104	PTE4P1		2TM-P1	Sync. Coupling
C74	.01	400	C-8D-17270	P488-01	D6-103	PTE4S1	821-01	4TM-S1	Sync. Sep. Plate
C75	.005	400	C-8D-17608	P688-005	D6-502	PTE6D5	811-005	6TM-D5	Vert. Sync. Coupling
C76	.02	200	C-8D-17268	P488-02	DF-203	PTE4S2		2TM-S2	Integrator Net
C77	.05	400	C-8D-14461	P488-05		PTE4S5		4TM-S5	Vert. Discharge
C78	.25	400	C-8D-17784	P488-25		GT4P25		4TM-P25	Vert. Sweep Coupling
C79	470	500	C-8F3-121	1469-0005	D6-471	5R5T5	GP2K-470	MS-35	Horiz. Sync. Coupling
C80	220	500	C-8F3-117	S1220	D6-221	5W5T25	GP2K-220	1FM-325	Hor. Feedback
C81	220	500	C-8F3-117	S1220	D6-221	5W5T25	GP2K-220	1FM-325	Hor. Feedback
C82	680	500	C-8F3-123	S1680	D6-681	1W5T7	GP2K-680	1FM-37	Voltage Divider
C83	680	500	C-8F3-123	S1680	D6-681	1W5T7	GP2K-680	1FM-37	Voltage Divider
C84	.02	200	C-8D-17268	P488-02	DF-203	PTE4S2		2TM-S2	AFC Filter
C85	2000		C-8G-16049	S12000	D6-202	1W5D2	GP2M-002	29C2	AFC Filter
C86	3900	500	C-8F11-132	1464-004		1DR1D4		MS-24	Fixed Trimmer
C87	220	500	C-8F3-117	1469-00025	D6-221	5R5T25	GP2K-220	MS-325	Hor. MV Feedback
C88	330	500	C-8F3-119	S1330	D6-331	5R5T3	GP2K-330	19C14	Horiz. Discharge
C89	.001	600	C-8D-19193	P688-001	D6-102	PTE6D1	GP2L-001	6TM-D1	Hor. Sweep Coupling
C90	47		C-8D-12198	S147	D6-470	5W5Q5	GP1K-47	19C25	Hor. Feedback
C91	.1	600	C-8D-18861	P688-1	DF-104	PTE6P1		6TM-P1	Hor. Output Screen
C92	.05	400	C-8D-14461	P488-05	DF-503	PTE4S5		4TM-S5	Fixed Trimmer
C93	150		B-8G-19498	1469-00015	TCN-150	5R5T15	N750L-150	29C17	Fixed Trimmer
C94	5000		A-8G-13962	BPD-005	DD-502	ID5D5	811-005	29C1	RF Bypass ♦
C95	.1	400	C-8D-17990	P488-1	DF-104	PTE4P1		4TM-P1	AF Amp. Screen Note 5
C96	470	500		1469-0005	D6-471	5R5T5	GP2K-470	MS- 35	Fixed Trimmer Note 4
C97	470	500		1469-0005	D6-471	5R5T5	GP2K-470	MS- 35	Differentiator Net Note 4

* Some models use 10MFD in this application.
† Not used in all models.
‡ Some models use 51MMF in this application. Mfgrs. part # C-8G-11891.
§ Some models use 1000MMF in this application. Mfgrs. part # C-8G-13201.
♦ Used only in chassis 16AY28 and 17AY21.
Note 1. Late production chassis 16AY28 and 17AY21 use .002MFD in this application.
Note 2. Some models use 560MMF in this application. Mfgrs. part # C-8F3-122.
Note 3. Some models use .01MFD in this application. Mfgrs. part # C-8D-17270.
Note 4. Used only in chassis 16AY21I and 17AY24.
Note 5. Used only in late production.

CONTROLS

ITEM No.	RATING RESISTANCE	RATING WATTS		REPLACEMENT DATA RAYTHEON PART No.	IRC PART No.	CLAROSTAT PART No.	CENTRALAB PART No.	INSTALLATION NOTES
R1A	5000Ω		Horizontal	A-10A-18441		RTV-218	SBBT-617-S	Contrast control - panel
B	1Meg							Volume control and SW-tapped ⓐ 100KΩ-rear
R2A	50KΩ			A-10B-17764	Q11-123	AG-44-S	AN-31	Brightness control
B	Shaft			Not req.	Not req.	KSS-3	AK-1	Attach to R2A per instructions
R3A	1Meg		Vert.	A-10B-19542	Q13-137	AG-63-Z	BSK-70	Tone control
B	Shaft			Not req.	Not req.	KSS-3	Not req.	Attach to R3A per instructions
R4A	100KΩ	½		A-10B-17275	Q11-128	AG-49-S	AN-40	Vert. hold control
B	Shaft			Not req.	Not req.	KSS-3	AK-1	Attach to R4A per instructions
R5A	5000Ω	½		A-10B-19218ⓧ	Q11-114	AG-19-S	AN-10	Vert. linearity control
B	Shaft			Not req.	Not req.	FKS-1/4	AK-1	Attach to R5A per instructions
R6A	750KΩ	½		A-10B-19220*		AG-61-S	AN-69	Vert. size control
B	Shaft			Not req.		FKS-1/4	AK-1	Attach to R6A per instructions

ⓧ Models 16AY21I and 17AY24 use control with part number A-10B-17766 in this application.
* Models 16AY21I and 17AY24 use control with part number A-10B-18240 in this application.

RESISTORS

ITEM No.	RATING RESISTANCE	RATING WATTS		REPLACEMENT DATA RAYTHEON PART No.	IRC PART No.	IDENTIFICATION CODES ALL RESISTORS ± 10% UNLESS OTHERWISE STATED
R7	470KΩ			C-9B1-94	BTS-470K	Antenna Isolation
R8	68ΩΩ			C-9B1-60	BTS-680	Antenna Coil Shunt
R9	10KΩ			C-9B1-74		RF Amp. Grid
R10	68Ω			C-9B1-48		RF Amp. Cathode
R11	1000Ω	20%		C-9B1-13	BTS-1000	RF Amp. Screen
R12	5600Ω			C-9B1-71		RF Coil Shunt
R13	68KΩ			C-9B1-84		Converter Grid
R14	2200Ω			C-9B1-66	BTS-2200	Converter Cathode - See Note 1
R15	1000Ω	20%		C-9B1-13	BTS-1000	Converter Decoup
R16	10KΩ			C-9B1-74		Osc. Grid
R17	10Ω			C-9B1-38		Parasitic Supp
R18	10Ω			C-9B1-38		Parasitic Supp
R19	8200Ω			C-9B2-73		Osc. Plate
R20	1000Ω	20%		C-9B1-13	BTS-1000	AGC Network
R21	8200Ω			C-9B1-73		1st Video IF Amp. Grid
R22	82Ω			C-9B1-49	BTS-82	1st Video IF Amp. Cathode
R23	1000Ω	20%		C-9B1-13	BTS-1000	1st Video IF Amp. Decoup
R24	1000Ω	20%		C-9B1-13	BTS-1000	AGC Network
R25	6800Ω	20%				2nd Video IF Amp. Grid - See Note 2
R26	82Ω			C-9B1-49	BTS-82	2nd Video IF Amp. Cathode
R27	1000Ω	20%		C-9B1-13	BTS-1000	2nd Video IF Amp. Cathode
R28	1000Ω	20%		C-9B1-13	BTS-1000	AGC Network
R29	6800Ω	20%				3rd Video IF Amp. Grid - See Note 2
R30	82Ω			C-9B1-49	BTS-82	3rd Video IF Amp. Cathode
R31	1000Ω	20%		C-9B1-13	BTS-1000	3rd Video IF Amp. Decoup
R32	6800Ω	20%				4th Video IF Transformer Shunt
R33	120Ω			C-9B1-51	BTS-120	4th Video IF Amp. Cathode
R34	68KΩ					4th Video IF Amp. Screen
R35	5600Ω			C-9B1-71		4th Video IF Amp. Decoup
R36	12KΩ					5th Video IF Transformer Shunt
R37	1000Ω			C-9B1-62	BTS-1000	Osc. Decoup
R38	3900Ω				BTS-3900	Video Det. Diode Load
R39	10KΩ			C-9B1-74	BTS-10K	AGC Keying Grid
R40	2200Ω			C-9B1-66	BTS-2200	Video Amp. Plate
R41	1000Ω			C-9B1-62	BTS-1000	Video Amp. Plate
R42	47KΩ	2		C-9B4-82	BTB-47K	Voltage Divider - See Note 3
R43	4700Ω	2		C-9B4-70	BTB-4700	Voltage Divider -

RESISTORS (CONT.)

ITEM No.	RATING RESISTANCE	RATING WATTS		REPLACEMENT DATA RAYTHEON PART No.	IRC PART No.	IDENTIFICATION CODES
R44	1000Ω		10	C-9C14-1099	1 3/4A-1000	Voltage Divider - Wire Wound
R45	2.2Meg			C-9B1-102	BTS-2.2Meg	Video Output Grid - See Note 3
R46	100Ω			C-9B1-50	BTS-100	Video Output Cathode
R47	4700Ω		2	C-9B4-70	BTB-4700	Video Output Plate
R48	47KΩ		1		BTA-47K	Video Peaking Coil Shunt
R49	1200Ω		10	C-9C14-1100	1 3/4A-1200	Voltage Divider - Wire Wound
R50	2200Ω			C-9B1-66	BTS-2200	AGC Network
R51	68KΩ	20%		C-9B1-84	BTS-68K	AGC Network
R52	33KΩ				BTA-33K	AGC Network
R53	1Meg			C-9B1-98	BTS-1Meg	DC Restorer Diode Load
R54	22KΩ			C-9B1-78	BTS-22K	Picture Tube Grid
R55	100KΩ			C-9B1-86	BTS-100K	Picture Tube Cathode
R56	1000Ω			C-9B1-62	BTS-1000	Accelerator Anode Load
R57	68KΩ	20%		C-9B1-84	BTS-68K	Voltage Divider
R58	120Ω			C-9B1-51	BTS-120	Sound IF Amp. Cathode
R59	2200Ω			C-9B1-66	BTS-2200	Sound IF Amp. Decoup
R60	22KΩ			C-9B1-78	BTS-22K	De-emphasis
R61	22KΩ			C-9B1-78	BTS-22K	Ratio Det. Diode Load
R62	47KΩ		1		BTA-47K	Tone Compensation
R63	15Meg	20%		C-9B1-37	BTS-15Meg	AF Amp. Grid - See Note 11
R64	1Meg			C-9B1-98	BTS-1Meg	AF Amp. Screen See Note 4
R65	220KΩ			C-9B1-90	BTS-220K	AF Amp. Plate - See Note 5
R66	470KΩ			C-9B1-94	BTS-470K	Output Grid
R67	82ΩΩ			C-9B2-61	BTA-820	Output Cathode
R68	1000Ω		2	C-9B4-62	BTB-1000	Decoup - See Note 8
R69	4.7Meg			C-9B1-106	BTS-4.7Meg	Sync. Sep. Grid
R70	68KΩ		2	C-9B4-84	BTB-68K	Sync. Sep. Plate
R71	6800Ω			C-9B1-72	BTS-6800	Voltage Divider - See Note 9
R72	2.2Meg			C-9B1-102	BTS-2.2Meg	Sync. Amp. Grid - See Note 3
R73	47KΩ		2	C-9B4-82	BTB-47K	Sync. Amp. Plate - See Note 3
R74	47KΩ		1		BTA-47K	Integrator
R75	1.5Meg			C-9B1-100	BTS-1.5Meg	Vert. Osc. Grid
R76	220KΩ			C-9B1-90	BTS-220K	Vert. Osc. Plate
R77	1Meg			C-9B1-98	BTS-1Meg	Vert. Output Grid
R78	1000Ω			C-9B1-62	BTS-1000	Vert. Output Cathode
R79	47KΩ		1		BTA-47K	Voltage Divider
R80	470KΩ			C-9B1-94	BTS-470K	Voltage Divider
R81	220KΩ			C-9B1-90	BTS-220K	Voltage Divider
R82	3300Ω			C-9B1-68	BTS-3300	Vert. Peaking
R83	150KΩ			C-9B1-88	BTS-150K	Horiz. Discr. Diode Load
R84	2.2Meg			C-9B1-102	BTS-2.2Meg	Horiz. Discr. Diode Load - See Note 3
R85	2.2Meg			C-9B1-102	BTS-2.2Meg	Horiz. Discr. Diode Load - See Note 3
R86	150KΩ			C-9B1-88	BTS-150K	Horiz. Discr. Diode Load
R87	68KΩ	20%		C-9B1-84	BTS-68K	Horiz. Peaking
R88	1500Ω			C-9B1-64	BTS-1500	Horiz. MV Cathode
R89	5600Ω		2		BTB-5600	Horiz. MV Plate
R90	120KΩ	5%			BTS-120K-5%	Horiz. MV Grid
R91	270KΩ				BTS-270K	Horiz. MV Plate
R92	22ΩΩ		1			Parasitic Supp
R93	1Meg			C-9B1-98	BTS-1Meg	Horiz. Output Grid
R94	4700Ω		2	C-9B4-70	BTB-4700	Horiz. Output Screen
R95	470KΩ			C-9B1-94	BTS-470K	Horiz. Feedback - See Note 4
R96	330KΩ	5%			BTS-330-5%	Horiz. Feedback - See Note 6 and 7
R97	5600Ω		3			Voltage Divider - Wire Wound - See Note 16
R98	10Ω			C-9B1-38	BW-J-10	Centering Network
R99	470KΩ			C-9B1-94	BTS-470K	Isolation
R100	47KΩ			C-9B1-82	BTS-47K	Differentiator See Note 10

Note 1. Some models use 1200Ω resistor in this application.
Note 2. Some models use 8200Ω resistor in this application.
Note 3. Some models use series resistors in this application.
Note 4. Used only in late production models.
Note 5. Late production models use 470KΩ resistor in this application.
Note 6. Late production models use 680KΩ resistor in this application.
Note 7. Models 16AY21I and 17AY24 use 220KΩ resistor in this application.
Note 8. Models 16AY21I and 17AY24 use 2700Ω 5 watt resistor with part number C-9C12-1104 in this application.
Note 9. Models 16AY21I and 17AY24 use 8200Ω resistor in this application.
Note 10. Used only in models 16AY21I and 17AY24.
Note 11. Some models use 10Meg resistor in this application.
Note 16. Used only when horizontal output trans. part # C201-19533-1 is used.

TRANSFORMER (POWER)

ITEM No.	RATING PRI.	RATING SEC. 1	RATING SEC. 2	RATING SEC. 3	REPLACEMENT DATA RAYTHEON PART No.	STANCOR PART No.	MERIT PART No.	CHICAGO PART No.
T1	117VAC ⓐ 2A	680VCT 250ADC	5V ⓐ 3A	6.3V ⓐ 9A; SEC. 4 6.3V ⓐ 1.5A	C12A18399 C12A18399-1 ⑤	P-8159 & ⑥ P-5014 ⑦	P3059 & ⑥ P2945 ⑦	TP-395 & ⑥ FO-6 ⑦

⑤ Alternate part number.
⑥ Add series resistor to reduce voltage.
⑦ Mount beneath chassis.

TRANSFORMER (SWEEP CIRCUITS)

ITEM No.	RATING DC RESISTANCE PRI.	RATING DC RESISTANCE SEC.	REPLACEMENT DATA RAYTHEON PART No.	STANCOR PART No.	MERIT PART No.	CHICAGO PART No.	NOTES
T2	160Ω	930Ω	B12M-18241		A-3000	TB0-1 ①	Vert. Block Osc. Trans.
T3	205Ω tap ⓐ 30Ω	80 tap ⓐ .5Ω; SEC. 2 21Ω tap ⓐ 10.5Ω; SEC. 3 0Ω	C201-19533-1 C201-19533 ⑧ C12M-19407-2 ⑧				Horiz. Output Trans.
T4	730Ω tap ⓐ 9Ω		B-12C19048	A-8112 ①	A-3038	TSO-5	Vert. Output Trans.
T5A	14Ω		C201-19490		DY-7	MD-70F	Horiz. Deflection Coil
B	61Ω						Vert. Deflection Coil

① Drill one new mounting hole.
⑧ Alternate parts for chassis 16AY21I.

TRANSFORMER (AUDIO OUTPUT)

ITEM No.	RATING IMPEDANCE PRI.	RATING IMPEDANCE SEC.	RATING DC RES. PRI.	RATING DC RES. SEC.	REPLACEMENT DATA RAYTHEON PART No.	STANCOR PART No.	MERIT PART No.	CHICAGO PART No.	INSTALLATION NOTES
T6	8KΩ	3.2Ω	45Ω	.8Ω	B12C-18743	A-8114 ①	A-2931	RO-16 ①	① Drill one new mtg. hole.

SPEAKER

ITEM No.	RATINGS SIZE	RATINGS FIELD	RATINGS V. C. IMP.	REPLACEMENT DATA RAYTHEON PART No.	JENSEN PART No.	QUAM PART No.	NOTES
SP1A	12"	PM	4Ω	B18A-19544	12J12	18A4	
B		PM		C18A-18865 ②			② Used in console models.
C	6"	PM	3.2Ω	C18A-18745 ③			③ Used in table models.

FILTER CHOKE

ITEM No.	RATINGS TOTAL DIRECT CURRENT	RATINGS D.C. RESISTANCE	RATINGS INDUCTANCE (0 CURRENT 1000 ~)	REPLACEMENT DATA RAYTHEON PART No.	STANCOR PART No.	MERIT PART No.	CHICAGO PART No.	INSTALLATION NOTES
L1	.240A	35Ω	1.4Henries	B-16A-17959	C-2326 ①	C-2974 ①	TR-3300 ①	① Drill one new mtg. hole.
L2	.240A	35Ω	1.4Henries	B-16A-17959	A-2326 ①	C-2974 ①	TR-3300 ①	

COILS (RF-IF)

ITEM No.	USE	DC RES. PRI.	DC RES. SEC.	REPLACEMENT DATA RAYTHEON PART No.	MEISSNER PART No.	NOTES
L3	Antenna Coil	0Ω	0Ω	B-20I-17143		High band
L4	Antenna Coil	.1Ω	.1Ω			Low band (part of L3)
L5	RF Choke	.9Ω		A-16A-17128		
L6	RF Coil Primary	.1Ω		B-13E-17140		High band
L7	RF Coil Secondary	.1Ω		B-13E-17140		High band
L8	RF Coil Primary	.1Ω		B-13E-12046		Low band
L9	RF Coil Secondary	.1Ω		B-13E-12046		Low band
L10	Osc. Coil	.1Ω		B-13E-17140		High band
L11	Osc. Coil	.1Ω		B-13D-12155		Low band
L12	Conv. Plate Trap	11Ω		A-16A-18025		
L13	1st Video IF	.3Ω		B-13M-19521		
L14	Fil. Choke	.3Ω		A-20I-15609		
L15	2nd Video IF	.1Ω		A-20I-15612		
L16	3rd Video IF	.1Ω		A-20I-15612		
L17	4th Video IF	.1Ω		A-20I-15612		
L18	Grid Choke	2.3Ω		A-20I-15608		
L19	5th Video IF	.9Ω	.9Ω	B-13B-18784		
L20	Fil. Choke	1.2Ω		A-16A-17937		
L21	Peaking	10Ω			19-1920	83 Microhenries
L22A	4.5MC Trap	1.5Ω		B-20I-19458		Includes L23 and C53 (chassis 16AY28 and 17AY21)
B	4.5MC Trap			B-20I-19363		Includes L23 and C53 (chassis 16AY21I and 17AY24)
L23	Peaking	25Ω			19-1922	410 Microhenries (part of L22)
L24	Peaking	7.5Ω		A-16A-19485	19-1922	240 Microhenries
L25	Peaking	9.5Ω		A-16A-19486		
L26	Sound IF	3.7Ω		B-13A-19514		
L27A	Ratio Det. Trans	4.3Ω	.2Ω	B-13M-17273		Used in chassis with 6T8 Ratio Det.-AF Amp.
B	Ratio Det. Trans.			B-13M-19257		Used in chassis with 6AL5 Ratio Det. and 6AU6 AF Amp
L28A	Horiz. Freq.	80Ω		A-13D-19540		Chassis 16AY28 and 17AY21.
B	Horiz. Freq.			A-13D-19355		Chassis 16AY21I and 17AY24.
L29	Horiz. Lin.	11.5Ω		B-13M-19499		Resistance includes series 10Ω resistor.
L30	Horiz. size	.2Ω		A-13M-18233		

FUSES

ITEM No.	TYPE	RATING	REPLACEMENT DATA RAYTHEON PART No. FUSE	RAYTHEON PART No. HOLDER	UTTELFUSE PART No. FUSE	UTTELFUSE PART No. HOLDER	REMARKS
M2	3AG	1/4A	A46B-18362	A-55F-18024	312.250		

MISCELLANEOUS

ITEM No.	PART NAME	RAYTHEON PART No.	NOTES
M1	RF Tuner		
M3	Switch	A-20F-12108	TV-Phono
M4	Focus Magnet	B-55P-19497	
M5A	Ion Trap	B-16M-18623	
B	Ion Trap	B-16M-19706	Alternate
C	Ion Trap	B-16M-19343	Alternate
D	Ion Trap	B-16M-19705	Alternate
E	Ion Trap	B-16M-19237	Alternate
F	Ion Trap	B-16M-17962	Alternate
B2	Trimmer	A-8E-18508	Horizontal Drive (80-480MMF)
	Escutcheon	R-2M-19308	
	Safety Glass	B-30M-19332	
	Knob	B-5B-19349-76	Channel indicating (mahogany)
	Knob	B-5B-19349-56	Channel indicating (blond)
	Knob	B-5B-19348-76	Tuning (mahogany)
	Knob	B-5B-19348-56	Tuning (blond)
	Knob	B-5B-19351-76	Contrast (mahogany)
	Knob	B-5B-19351-56	Contrast (blond)
	Knob	B-5B-19350-76	Volume (mahogany)
	Knob	B-5B-19350-56	Volume (blond)
	Knob	A-5B-19510-29	Star shape for brightness, tone, vert. hold
	Knob	B-5B-18382-36	Antenna

RAYTHEON MODELS C-1615A, B, 16A, B, C-1714B; 15A, B, 15A, B, 16A, B, 18A, 19A; M-1611A, B, 12A, B, 13A, B, 14A, B; M-1711A, B, 12A, B, 13A, B, 14A; RC-1618A, B, 19A, B, RC-1718B, 19B