SAFETY PRECAUTIONS

SERVICE WARNING

ONLY qualified service technicians who are familiar with safety checks and guidelines should perform service work. For continued SAFETY:

1. Before replacing parts, disconnect power source to protect electrostatically sensitive parts. Examples of typical electrostatically sensitive parts are integrated circuits, some field effect transistors, and semiconductor "chip" components.
2. Do not attempt to modify any circuit unless so recommended by the manufacturer.
3. When servicing chassis, use an isolation transformer between the line cord and power receptacle. Maintain AC line voltage at rated input.
4. Many electrical and mechanical parts are used in this VCR to provide protection against electrical shock, fire, and RF interference. These parts should be replaced with exact replacements only.
5. Use extreme caution when handling the printed circuit boards. Some semiconductor devices can be damaged easily by static electricity. Drain off any electrostatic charge on your body by touching a known earth ground. Wear a commercially available discharging wrist strap device. This should be removed prior to applying power to the VCR under test.
6. Use a grounded-tip, low voltage soldering iron. After removing an electrical assembly containing electrostatically sensitive parts, place the assembly on a conductive surface such as aluminum foil.
7. Minimize body movement to avoid building an electrostatic charge when handling electrostatically sensitive parts.
8. Use an isolation (times 10) probe on oscilloscope.
9. Do not remove or install boards with AC power applied.
10. Do not use freon-propelled sprays or vacuum operated desoldering devices. These can generate electrical charges sufficient to damage semiconductor devices.
11. This VCR is equipped with a grounded three-prong AC plug. This plug must fit into a grounded AC power outlet. Do not defeat the AC plug safety feature.
12. Periodically examine the AC power cord for damaged or cracked insulation.
13. The VCR cabinet is equipped with vents to prevent heat build-up. Never block, cover, or obstruct these vents. Instructions should be given, especially to children, that objects should not be dropped or pushed into the vents of the cabinet. This could cause shock or equipment damage.
14. Remove plug from AC outlet during electrical storms. Do not allow anything to rest on AC power cord. Unplug AC power cord from outlet before cleaning VCR.
15. Never use liquids or aerosols directly on the VCR. Spray on cloth and then apply to the VCR cabinet. Make sure the VCR is disconnected from the AC power line. Never expose the VCR to liquids. If exposed to liquids, turn the VCR off. Do not place the VCR near possible liquid sources.

SAFETY CHECKS -- FIRE AND SHOCK HAZARD

Hot Leakage Current Check

1. Plug the AC cord directly into AC outlet. DO NOT use an isolation transformer.
2. Use a 1500-ohm, 10-watt resistor in parallel with a .15-microfarad 150 Volts AC capacitor to connect between any exposed metal parts on the set and a good earth ground. (See figure below.)
3. Use an AC voltmeter with at least 5000 ohms-per-volt sensitivity to measure the voltage across the resistor. Check all exposed metal parts and measure voltage at each point.
4. Voltage readings should not exceed .3 volts RMS. Any value exceeding this limit constitutes a potential shock hazard and must be corrected.
5. If AC plug is not polarized, reverse the AC plug and repeat exposed metal part voltage measurement at each point.

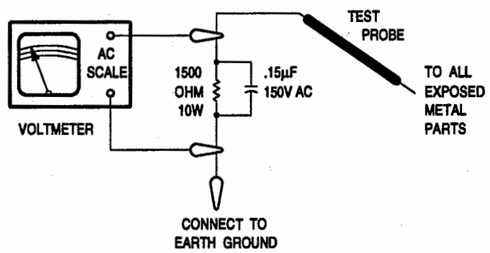

2647 Waterfront Parkway East Drive, Suite 300
Indianapolis, IN 46214-2012

Printed in the United States of America 5 4 3 2 1

066270

0 81262 66270 0

VCR-270

VCRfacts® Technical Service Data

VCR-270

MODEL VG7620

GE

INDEX

For Supplier Address, See PHOTOFACT Annual Index

GE
Model VG7620

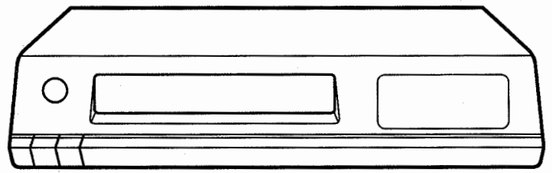

The following models are similar to this basic coverage and may effectively be repaired using this service information. However, minor differences may be found between these models and those in the basic coverage.

BRAND	MODEL	BRAND	MODEL
MAGNAVOX	*VR1820A*	*PHILCO*	*VT3120AT01*
MAGNAVOX	*VR9820A*	*PHILCO*	*VT3124AT01*
MAGNAVOX	*VR9822A*	*SYLVANIA*	*VC4120AT*
MAGNAVOX	*VR9825A*		

Essential coverage for servicing a video cassette recorder...

- Schematics
- Interconnect Diagram
- Electrical Parts List
- Waveforms
- Exploded Views
- Mechanical Alignment
- Mechanical Parts List
- Service Information

HOWARD W. SAMS & COMPANY

NOVEMBER 1995 VCR-270

VCR-270

INTERCONNECT DIAGRAM

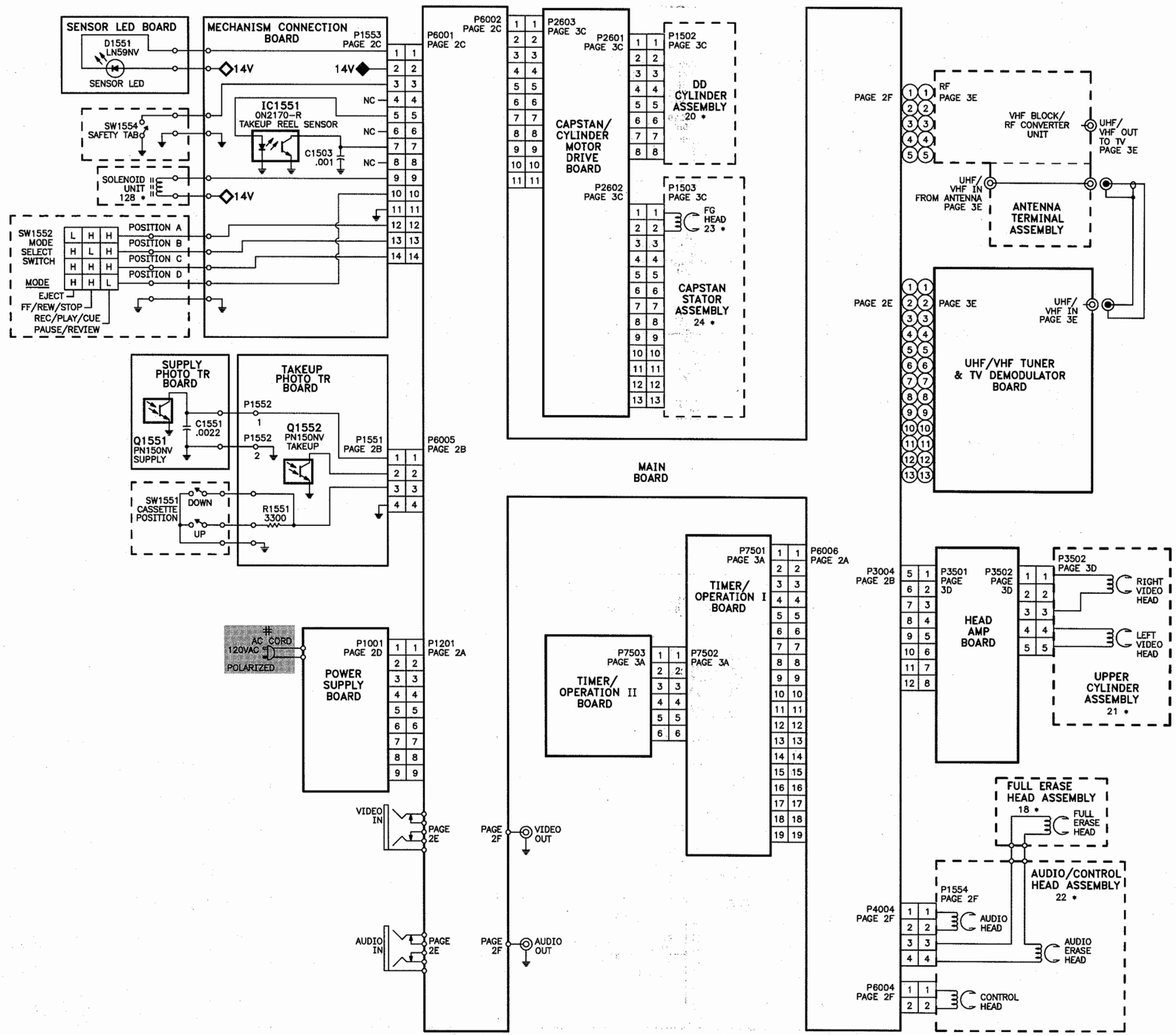

* INDICATES THE ITEM NUMBER USED IN THE MECHANICAL PARTS LIST AND EXPLODED VIEWS.

VOLTAGES TAKEN IN PLAYBACK

ADDITIONAL SCHEMATIC NOTES, SEE PAGE 3H

A PHOTOFACT STANDARD NOTATION SCHEMATIC WITH CIRCUITRACE®

MECHANICAL ALIGNMENT

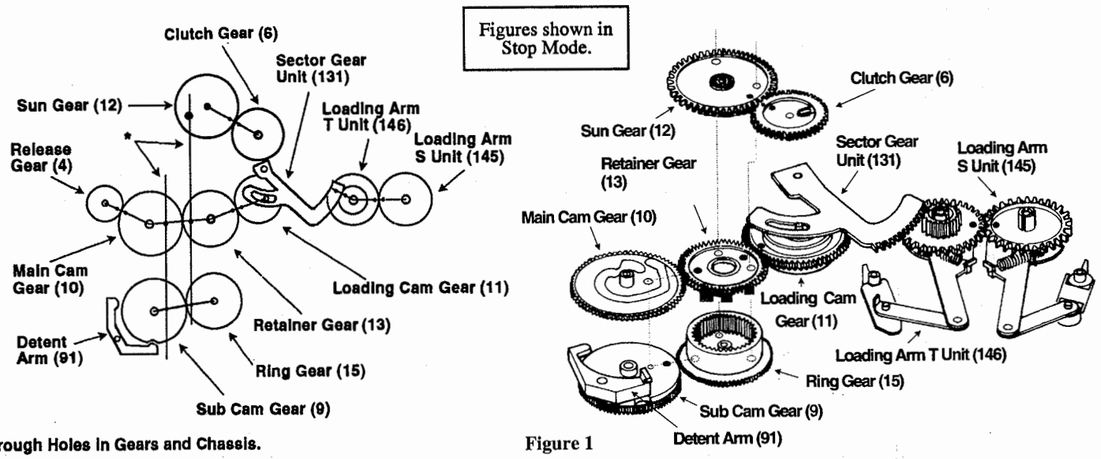

*Through Holes In Gears and Chassis.

Figure 1

Numbers in parentheses indicate the item number used in the mechanical parts list and exploded views.

GEAR ALIGNMENT

Use figure 1 and exploded views for reference in the following steps. All gears must align exactly right, not one gear can be one tooth off.

1. Install ring gear (15) so that holes in ring gear line up with holes in chassis.
2. Install sub cam gear (9) so that the hole on the sub cam gear is exactly in line with the hole in the chassis and the small hole is in line with the hole in the ring gear.
3. Install the detent arm (91).
4. Install the release gear (4) from the top side and install the main cam gear (10) on top of sub cam gear, so that the small hole in the release gear and the small hole in the main cam gear are exactly in line. Check that the large holes in the main cam gear and sub cam gear are exactly in line.
5. Install the retainer gear (13) so that holes align with ring gear holes and chassis holes.
6. Install loading cam gear (11) so that the hole lines up with the hole on retainer gear. Check that the hole in the main cam gear lines up with the hole on the retainer gear.
7. Install sun gear (12) so that the holes on the sun gear align with the holes in the retainer gear, ring gear, and the chassis.
8. Install clutch gear (6) so that the small hole lines up with the hole in the sun gear.
9. Set the loading post S unit (138) and loading post T unit (137) tape guide posts to the unload position. Install the loading arm T unit (146) and the loading arm S unit (145) so that the holes are exactly in line.
10. Install the sector gear unit (131) so that the hole is exactly in line with the projection mark on the loading arm T unit.
11. Install the span limiter (169) using retainer rings and screw.
12. Confirm all gears are aligned as in figure 1.
13. Install the link gear (16), from the top side, so that indentation on the link gear lines up with small hole on sub cam gear, as shown in figure 6.

CASSETTE UP UNIT ALIGNMENT

Use figures 2, 3, and exploded views for reference in the following steps.

1. Press the change lever (89) towards the front of the VCR. Rotate the center pulley unit (159) counterclockwise until the mechanism is placed in the full eject position.
   NOTE: The change lever is located by the main cam gear, and is actuated by the solenoid unit (128). When the mechanism is almost to the full eject position be careful not to rotate the center pulley too hard so that the gears jump a tooth. If this happens gear realignment must be performed. When mechanism is in full eject position the link gear (16) will not turn any more.
2. Mentally note the position of the link gear by the indentation marking on the top of the link gear.
3. Rotate the center pulley unit clockwise until link gear makes one complete revolution.

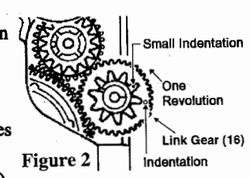

Figure 2

4. Install the cassette up unit (48) onto the chassis so the small indentation on the link gear fits into the first groove of the Rack-B (157). If it does not fit, slide the cassette holder bottom (43) a little to mesh the gear teeth.
5. Install the four screws holding the cassette up unit in place.
6. By rotating the center pulley unit and pressing the change lever manually, check to see the loading and unloading of a tape.

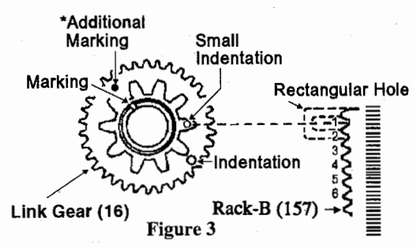

Figure 3

* Some versions use this additional marking for clarity in alignment.

PINCH ROLLER LIFT ASSEMBLY ALIGNMENT

Use figures 4 thru 7 and exploded views for reference with the following steps.

1. Install the P5 sector gear (2) so that the hole lines up with the last tooth on the P5 arm unit (140).

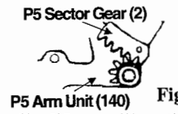

Figure 4

2. Push the P5 arm unit clockwise until it stops and hold it. Install the pressure roller lift cam (3) so that the hole in mode select switch (SW1552) lines up with the hole on the pressure roller lift cam, and the projection on the pressure roller lift cam lines up with the small indentation on the release gear (4). Release the P5 arm unit after these two points are aligned.

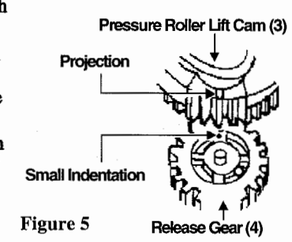

Figure 5

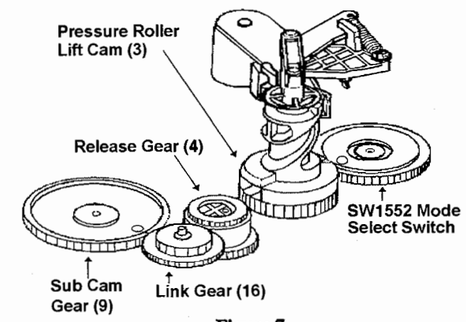

Figure 7

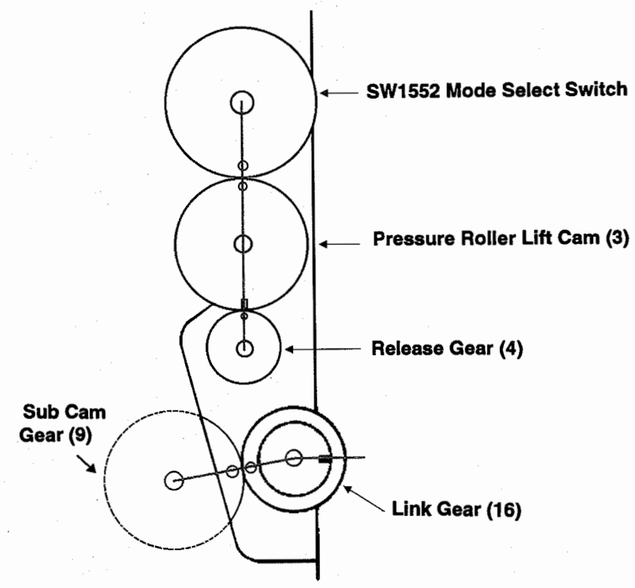

Figure 6

MAIN BOARD SCHEMATIC continued

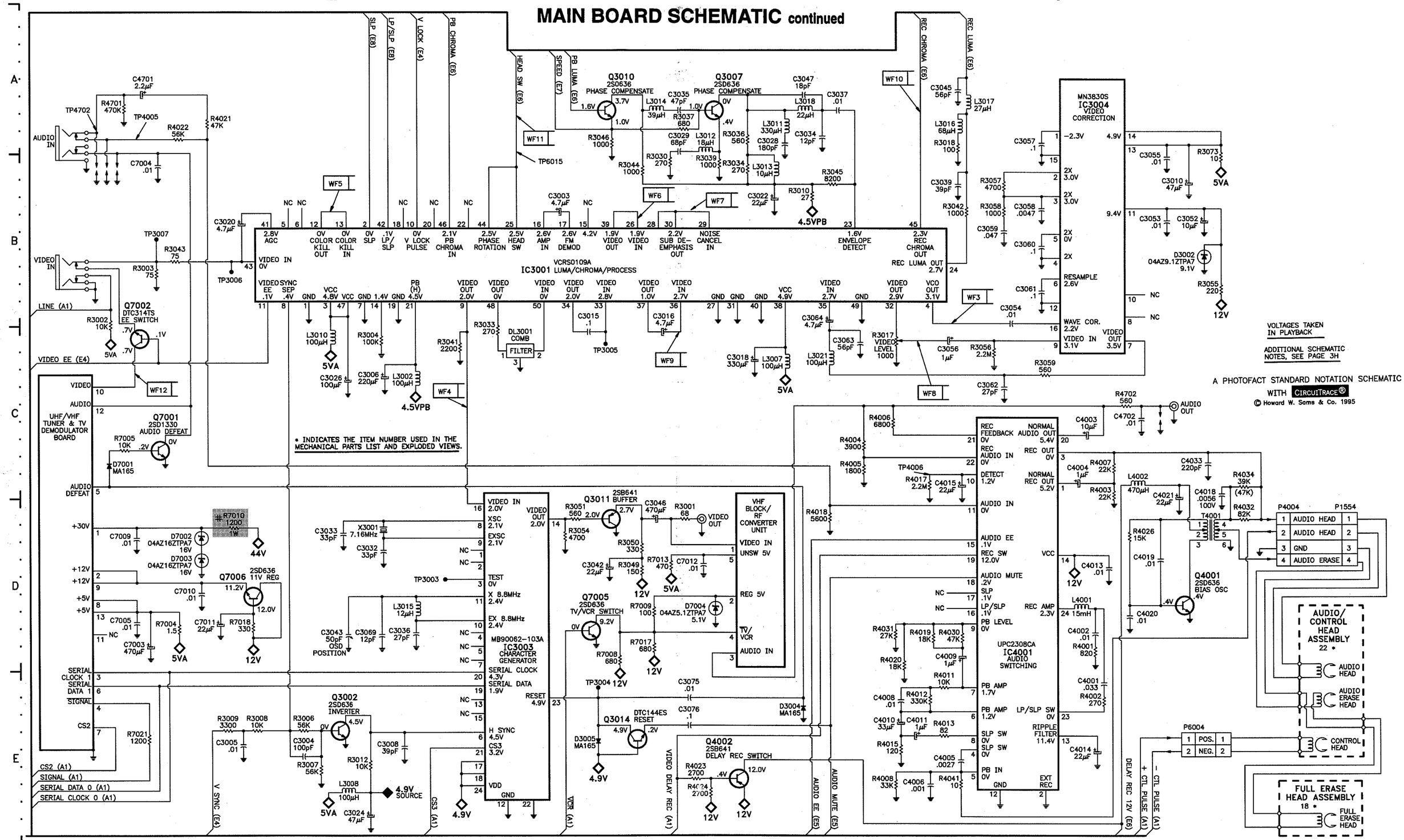

VOLTAGES TAKEN IN PLAYBACK

ADDITIONAL SCHEMATIC NOTES, SEE PAGE 3H

A PHOTOFACT STANDARD NOTATION SCHEMATIC WITH CIRCUITRACE®

EXPLODED VIEW - CASSETTE UP UNIT

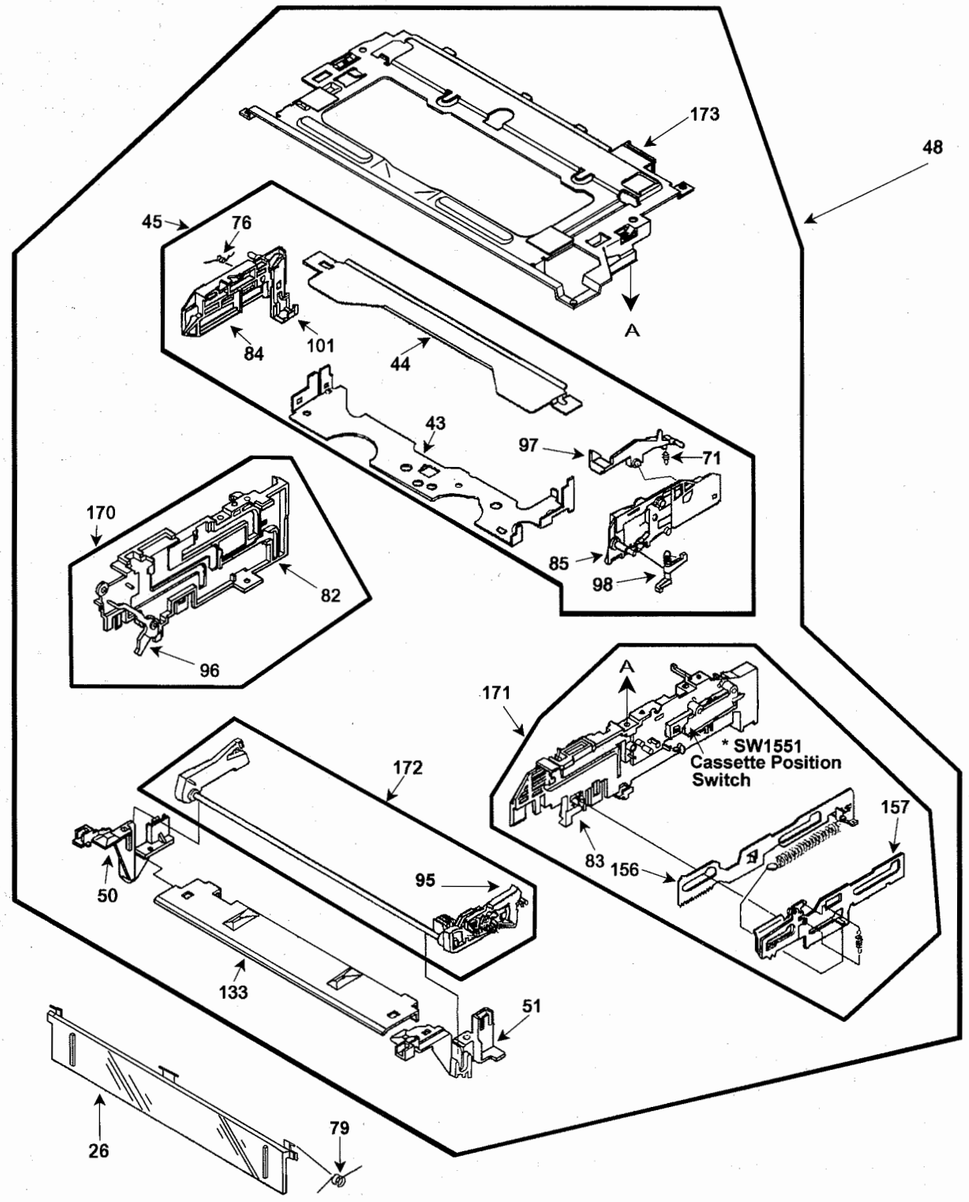

* See Electrical Parts List.

MECHANICAL PARTS LIST

Item No.	Description	Part No.
2	P5 Sector Gear	190046
3	Pressure Roller Lift Cam	190614
4	Release Gear	190048
5	Lock Slide Gear	190049
6	Clutch Gear	190050
7	Drive Gear	190051
8	Intermediate Gear	195437
9	Sub Cam Gear	190053
10	Main Cam Gear	190054
11	Loading Cam Gear	190055
12	Sun Gear	190056
13	Retainer Gear	190057
14	Planetary Gear	190058
15	Ring Gear	190059
16	Link Gear	190060
17	Supply Roller	190061
18	Full Erase Head Assembly	194298
19	Ribbed Timing Belt	190063
20	DD Cylinder Assembly	195438
21	Upper Cylinder Assembly	190065
22	Audio/Control Head Assembly	195439
23	FG Head	190225
24	Capstan Stator Assembly	195440
26	Cassette Door	195520
43	Cassette Holder Bottom	190076
44	Tape Remain Indicator	185395
45	Cassette Holder Assembly	195443
47	Capstan Stator Stopper	193147
48	Cassette Up Unit	195527
50	Cassette Guide L	190080
51	Cassette Guide R	190081
52	Sub Plate	190082
55	Audio/Control Height Spring	195546
57	Tension Spring	190085
58	Tension Release Arm Spring	190086
60	Pressure Roller Spring-1	190088
61	Pressure Roller Arm Spring-2	190089
62	Release Spring	190090
63	Clutch Gear Spring	190091
64	Main Lever Spring	190092
65	T Soft Arm Brake Spring	190093
66	Main Brake Spring	190094
71	Guide Spring R	190099
76	Release Lever Spring	190118
79	Blind Panel Spring	195528
80	V-Stopper	190104
81	Stopper Base	195613
82	Side Plate L	195529
83	Side Plate R	195530
84	Cassette Holder Guide L	190106
85	Cassette Holder Guide R	195452
86	Pressure Roller Arm-1	190108
87	Pressure Roller Lift Arm	190109
88	Solenoid Lever	190110
89	Change Lever	190111
90	Release Lever Unit	190112
91	Detent Arm	190113
92	Play Set Arm	190114
93	Wiper Arm Gear L	195453
94	Wiper Arm Gear R	195454
95	Wiper Arm R	195455
96	Blind Lever	195531
97	Cassette Opener	190119
98	Release Lever	190120
101	Holder Guide Lever L	190121
104	Sub Lever	190122
105	Collar	183625
106	Supply Limiter	190123
107	Supply Upper Limiter	190124
108	P4 Sleeve	190125
109	P4 Limiter	190126
110	P4 Upper Limiter	190127
111	Pressure Cam Cap	190128
112	Oil Seal (1)	VMXS0511
128	Solenoid Unit	190130
129	Shaft Holder Plate	195457
130	Release Lever Unit	190131
131	Sector Gear Unit	194420
133	Cassette Guide	190133
135	Grounding Plate	190134
136	Capstan Holder Unit	195458
137	Loading Post T Unit	195459
138	Loading Post S Unit	195460
139	Tension Arm Base Unit	195461
140	P5 Arm Unit	190625
141	Play Arm Unit	190138
142	Tension Release Arm A	190139
143	Tension Release Arm B	190140
144	Kick Rod Unit	190141
145	Loading Arm S Unit	190142
146	Loading Arm T Unit	195462
147	Cam Follower Arm	190144
148	Tension Arm Unit	190145
150	Soft Brake S Unit	190146
151	Soft Brake T Unit	195463
152	Main Brake S Unit	190148
153	Main Brake T Unit	190149
154	Pressure Roller Arm	190150
155	Main Lever Unit	195464
156	Rack-A	190152
157	Rack-B	190153
159	Center Pulley Unit	195465
160	Capstan Rotor Unit	195466
161	Supply Reel Gear Unit	190157
162	Takeup Reel Gear Clutch Unit	193136
163	Supply Reel Table Unit	194386
164	Takeup Reel Table Unit	194416
165	Tension Band Unit	190161
169	Span Limiter (2)	-
170	Side Plate L Unit (2)	-
171	Side Plate R Unit (2)	-
172	Main Shaft Unit	195468
173	Cassette Compartment Top Plate Unit (2)	-
411	Retaining Ring C-Type	190171
416	Washer	190629
417	Adjust Nut	185753
418	Poly Slider Washer	191399
419	Cut Washer (3)	190177
420	Thrust Screw Unit	190178
421	M3 Nut	195471
422	M4 Nut	193156
435	Retaining Ring C-Type	185243
436	Poly Slider Washer	190189
438	Poly Slider Washer	190191
441	Cut Washer (3)	190193
443	Washer	190194

(1) GE part number is not available, manufacturer part number has been supplied instead.
(2) Non-stock part.
(3) Cut washer is not reusable. If removed replace with new one.

MAIN BOARD, SENSOR LED BOARD, SUPPLY PHOTO TR BOARD, TAKEUP PHOTO TR BOARD SCHEMATIC

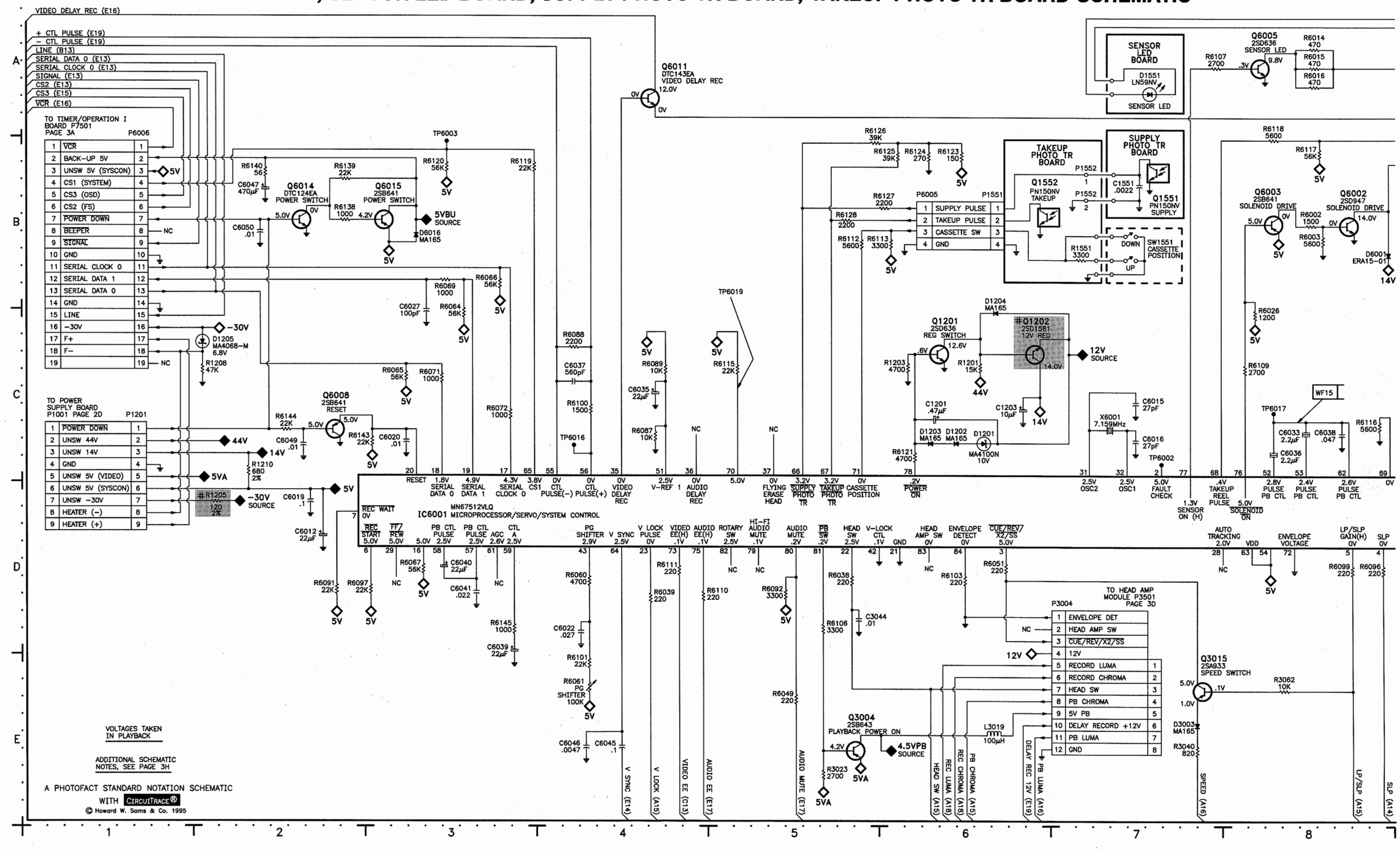

EXPLODED VIEW - TOP

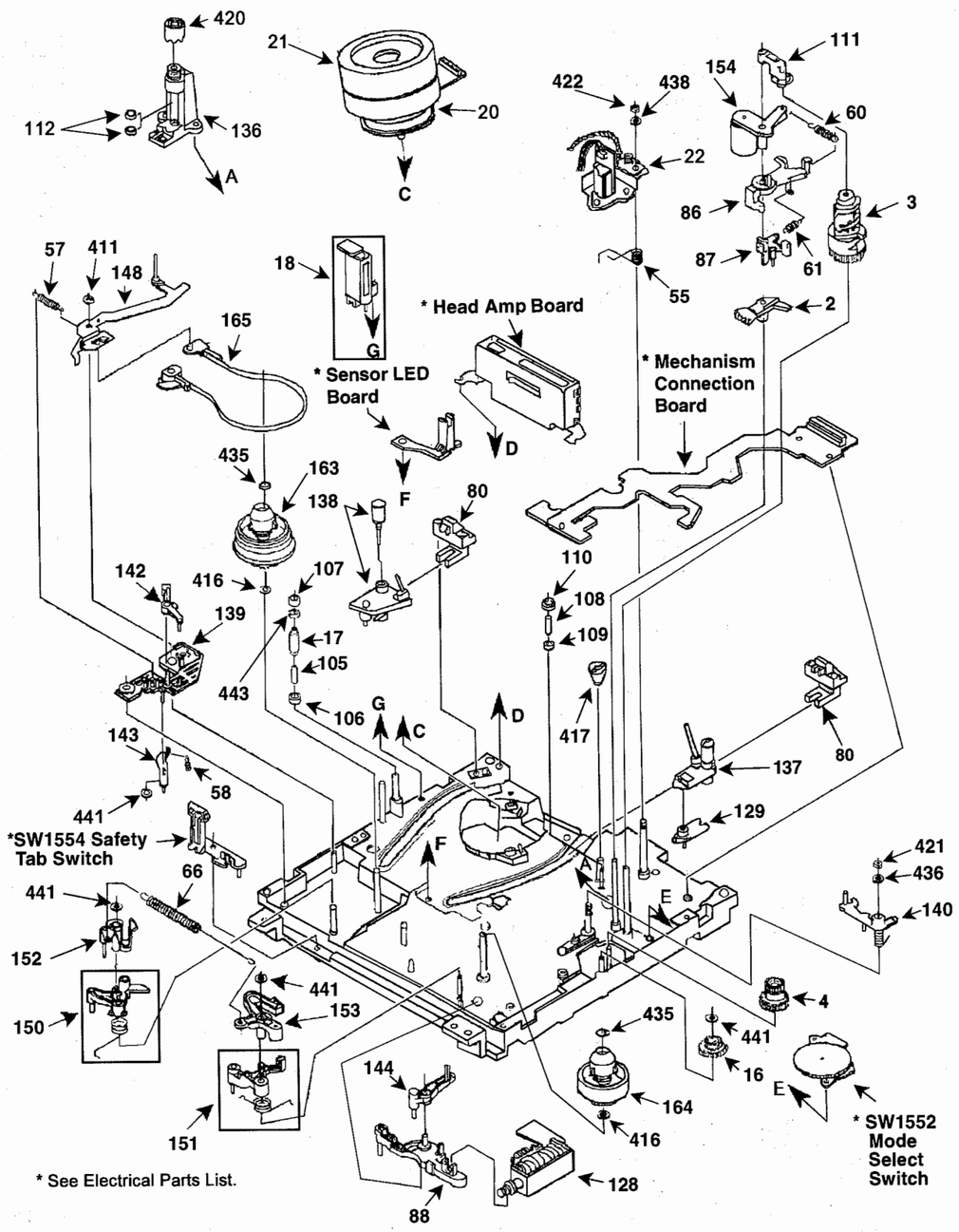

* See Electrical Parts List.

EXPLODED VIEW - BOTTOM

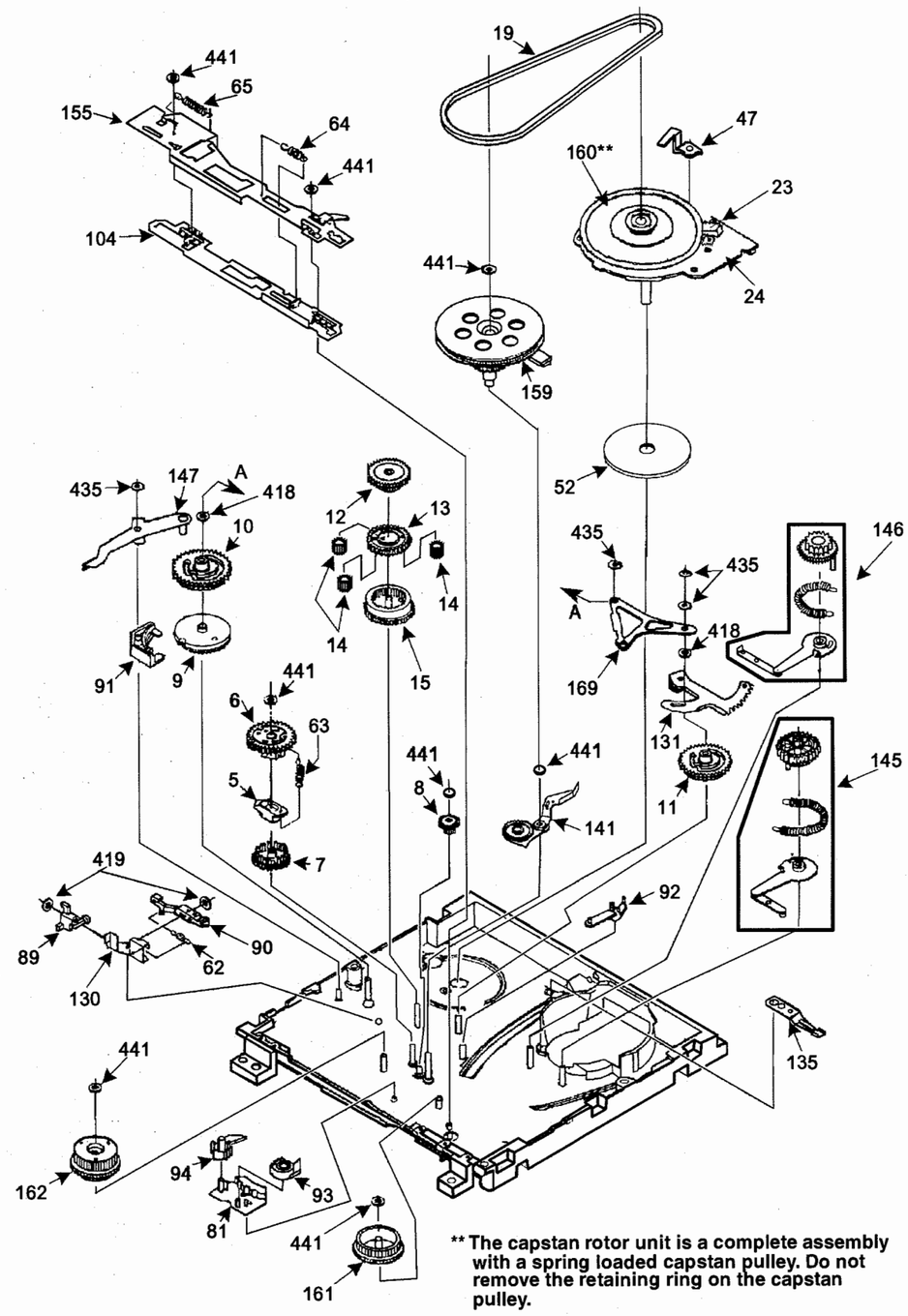

** The capstan rotor unit is a complete assembly with a spring loaded capstan pulley. Do not remove the retaining ring on the capstan pulley.

C
MECHANISM CONNECTION BOARD, MAIN BOARD SCHEMATIC continued

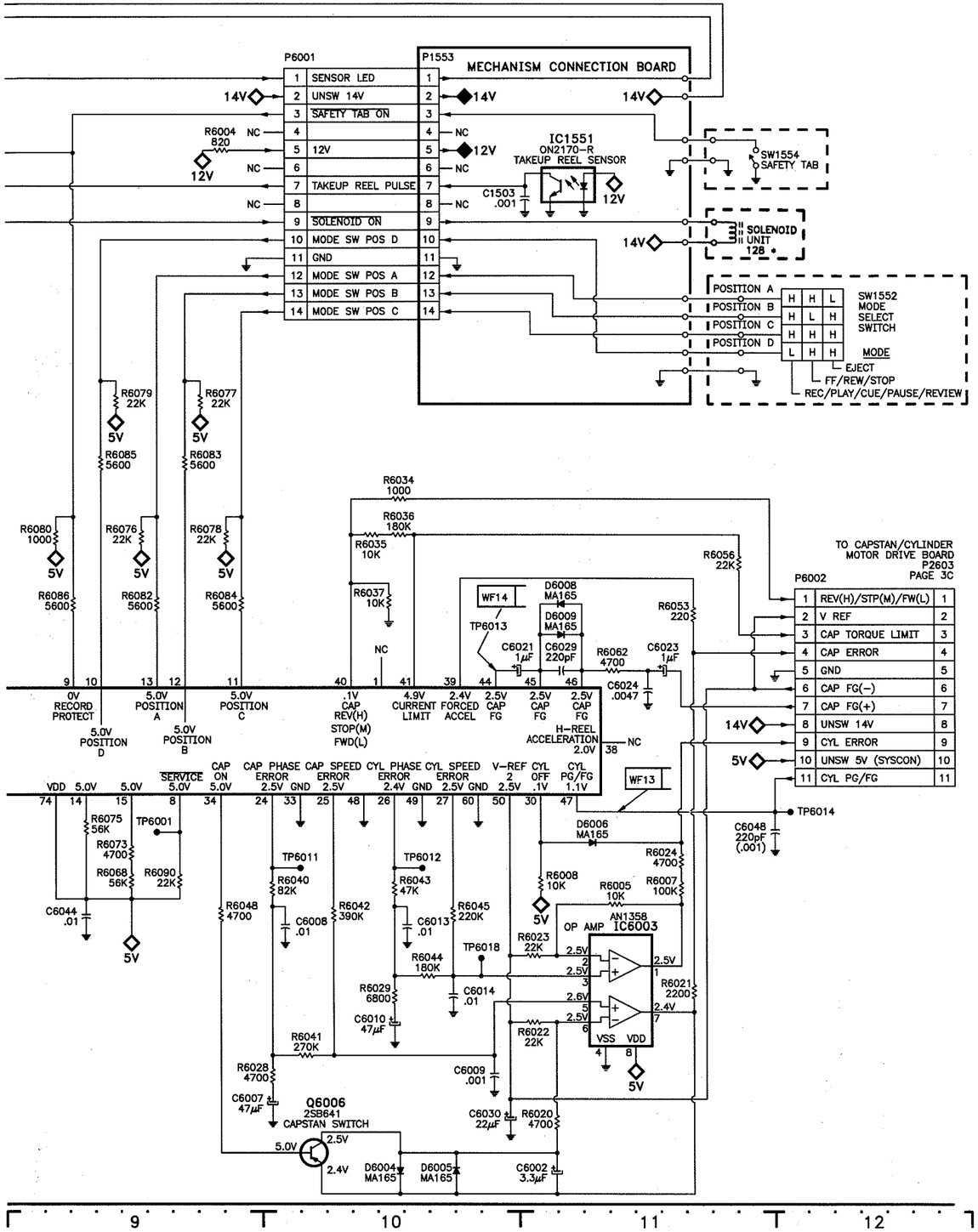

D
POWER SUPPLY BOARD SCHEMATIC

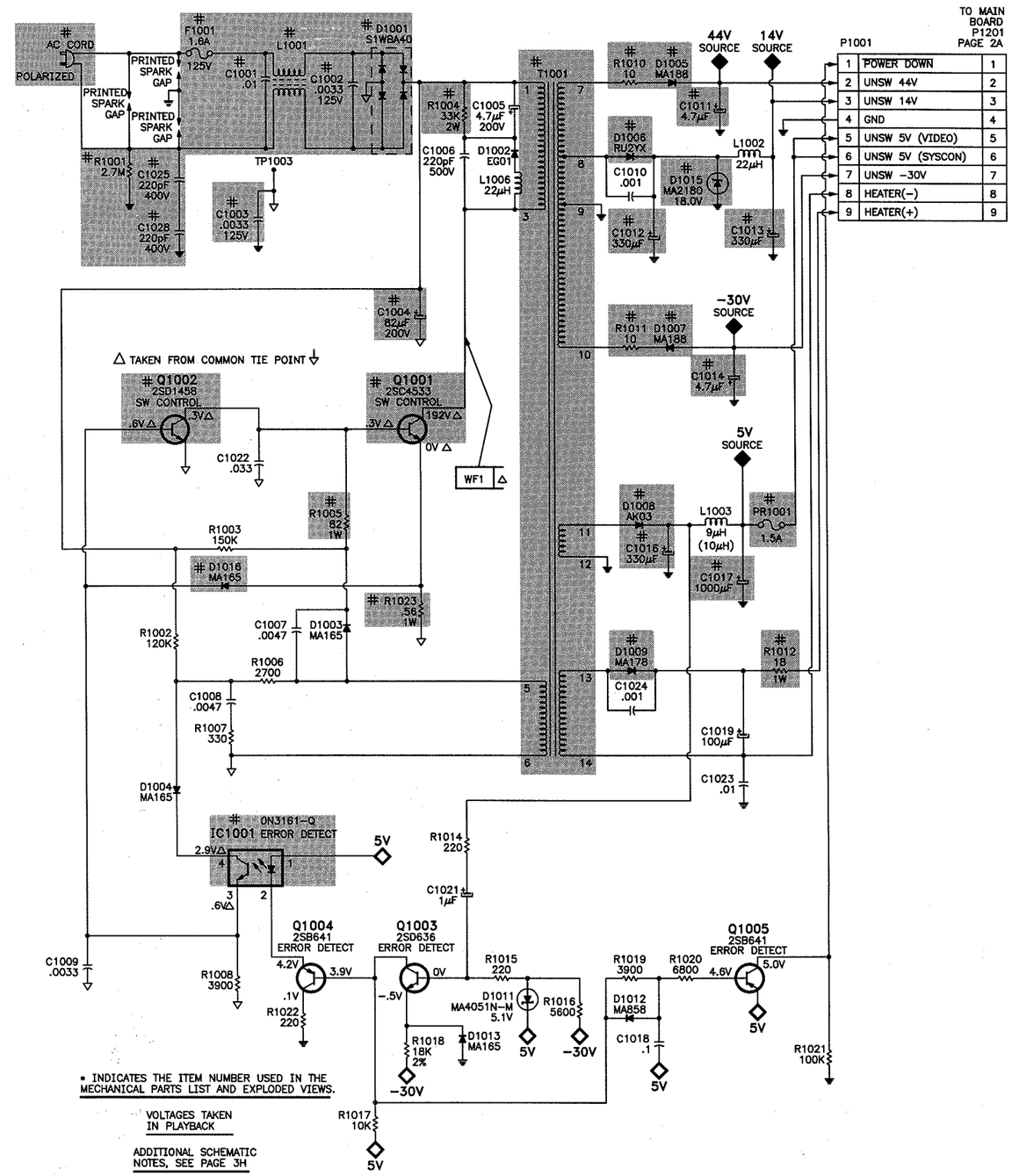

A PHOTOFACT STANDARD NOTATION SCHEMATIC WITH CIRCUITRACE®

C
CAPSTAN / CYLINDER MOTOR DRIVE BOARD SCHEMATIC

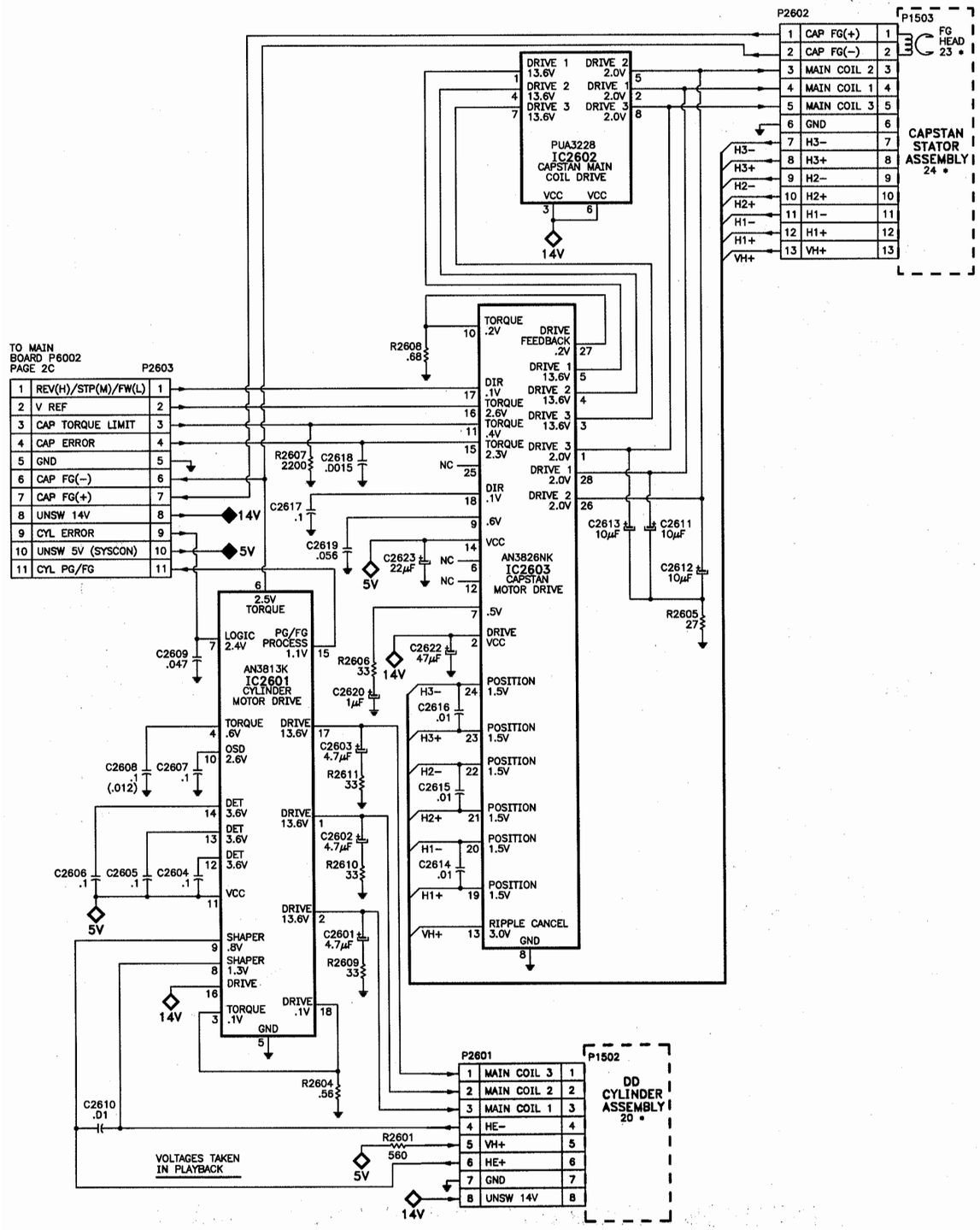

D
HEAD AMP BOARD SCHEMATIC

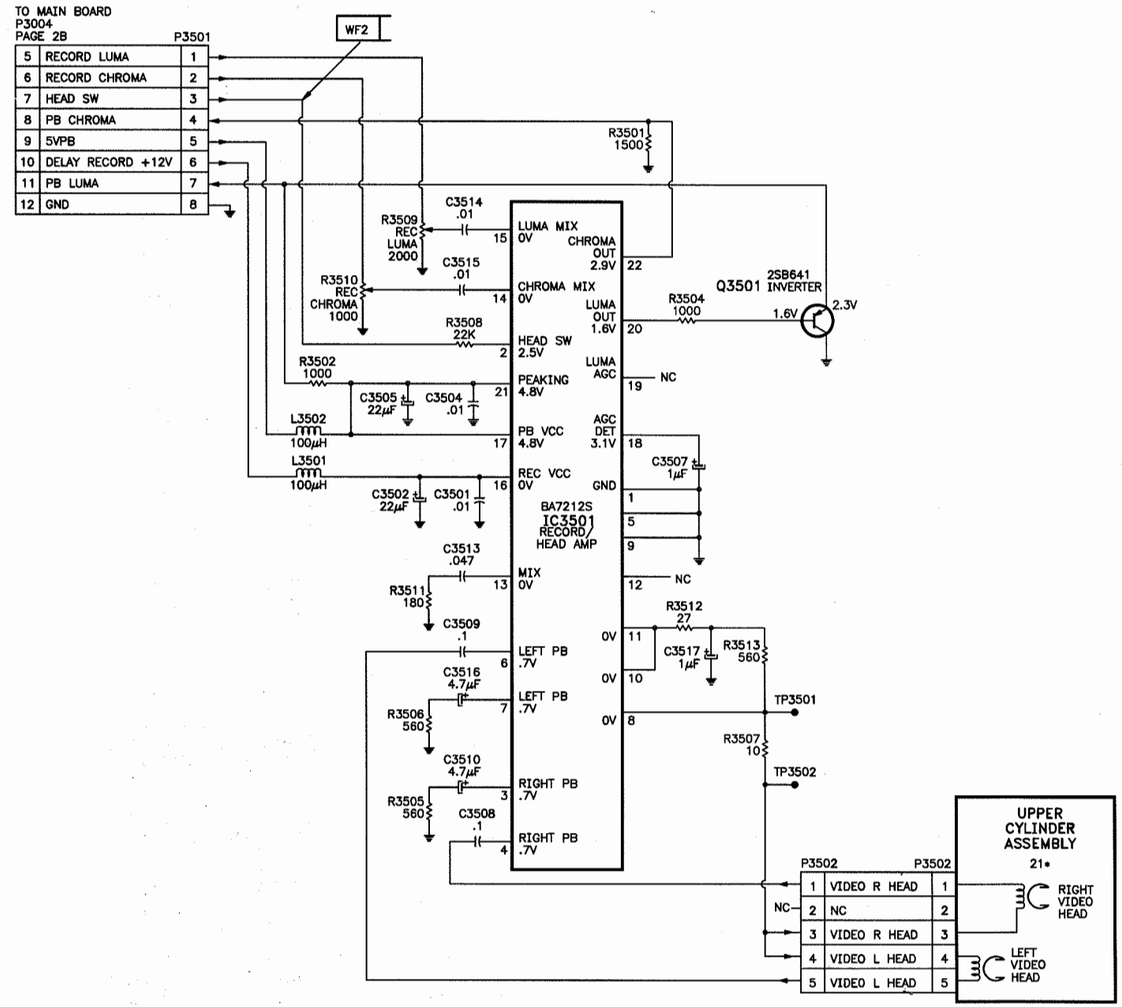

• INDICATES THE ITEM NUMBER USED IN THE MECHANICAL PARTS LIST AND EXPLODED VIEWS.

VOLTAGES TAKEN IN PLAYBACK

ADDITIONAL SCHEMATIC NOTES, SEE PAGE 3H

A PHOTOFACT STANDARD NOTATION SCHEMATIC WITH CIRCUITRACE®

IC FUNCTIONS

CAPSTAN / CYLINDER MOTOR DRIVE BOARD

IC2601
AN3813K

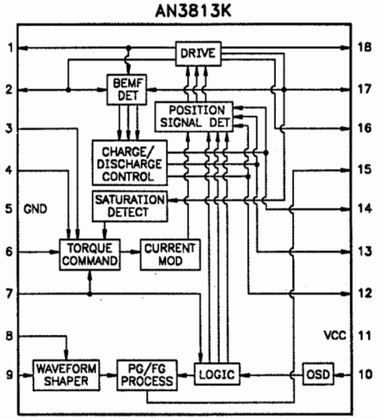

IC2602
PUA3228

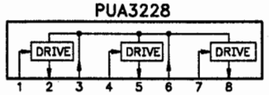

IC2603
AN3826NK

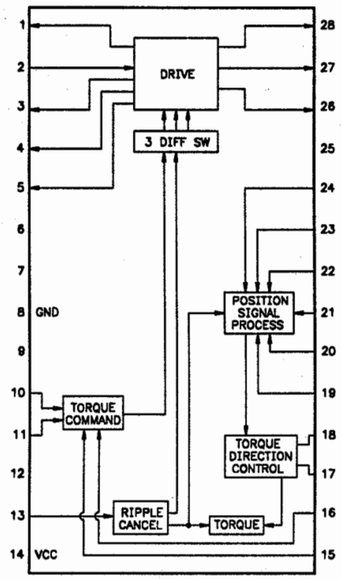

HEAD AMP BOARD

IC3501
BA7212S

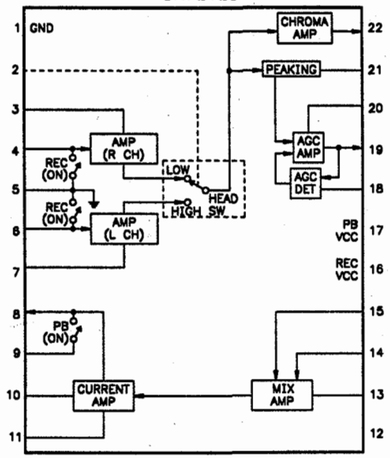

UHF/VHF TUNER & TV DEMODULATOR BOARD

IC701
AN5180NK

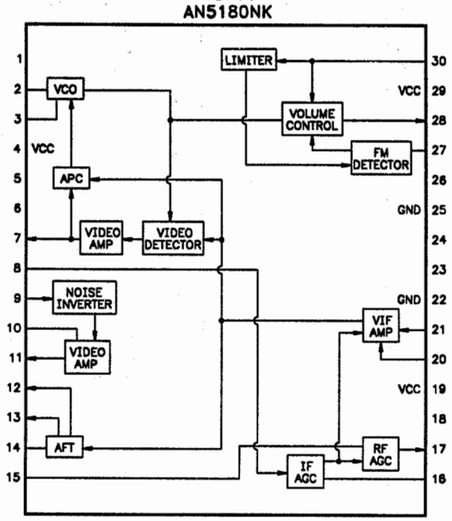

MAIN BOARD

IC3001
VCRS0109A

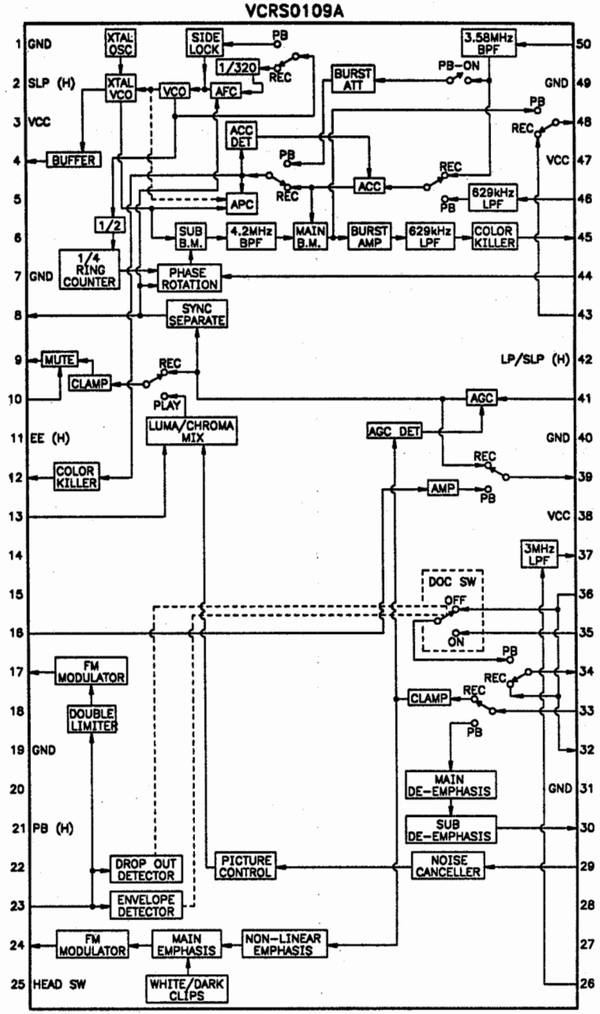

IC3004
MN3830S

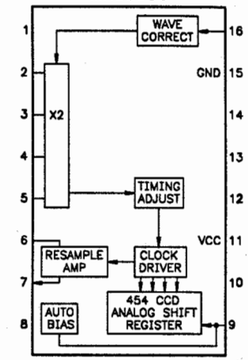

IC4001
UPC2308CA

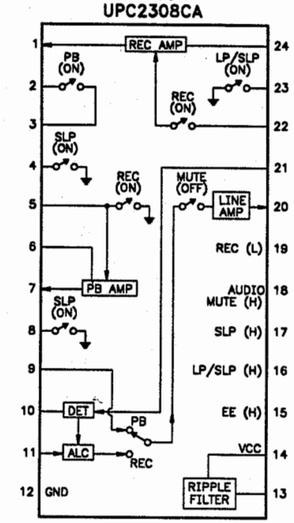

G
IR WIRELESS TRANSMITTER BOARD SCHEMATIC

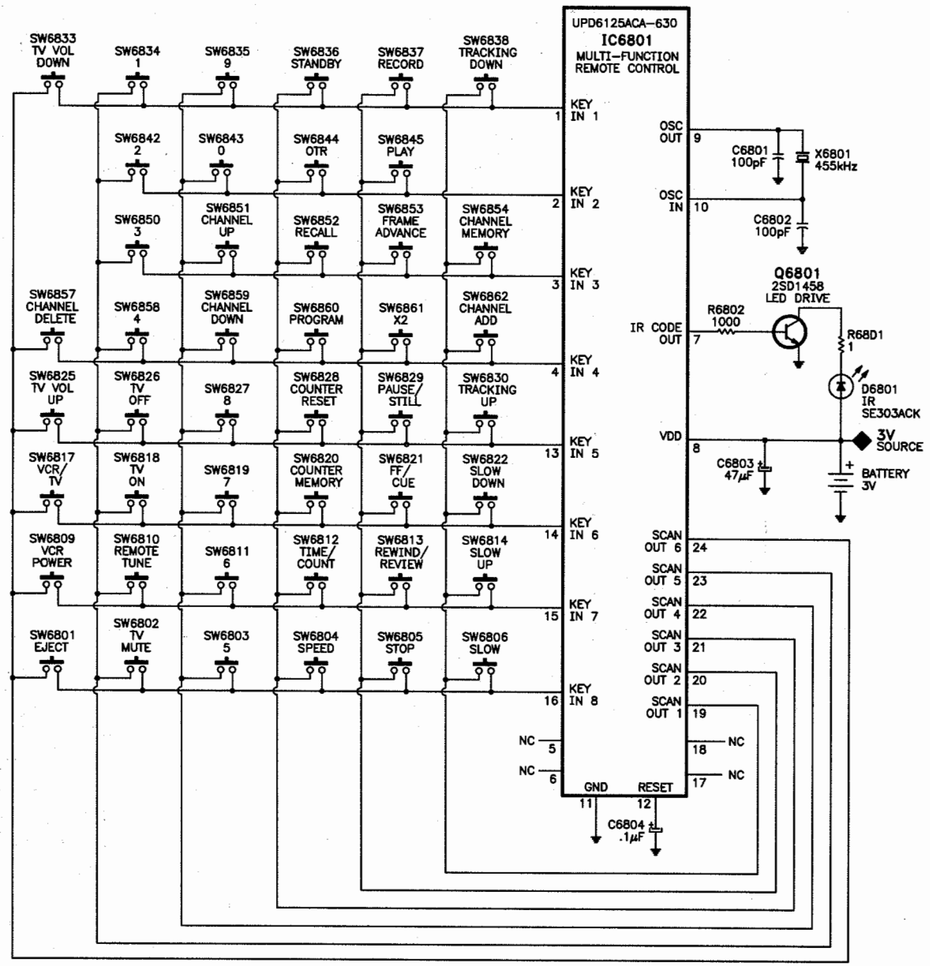

ADDITIONAL SCHEMATIC NOTES, SEE PAGE 3H

A PHOTOFACT STANDARD NOTATION SCHEMATIC WITH CIRCUITRACE®

WAVEFORMS

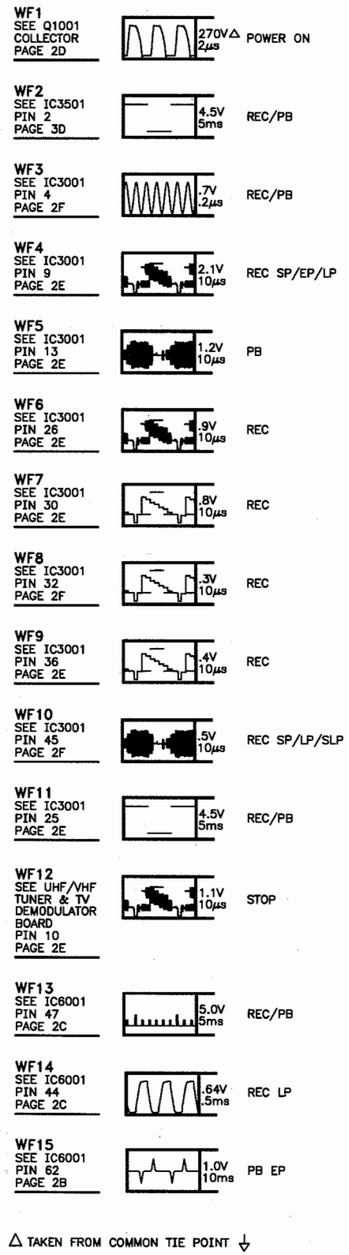

H
SCHEMATIC NOTES

For SAFETY use only equivalent replacement part, see parts list.

Circuitry not used in some sets.

Circuitry used in some versions.

Ground

Chassis ground

Common tie point

△ Taken from common tie point

◆ 12V SOURCE — CIRCUITRACE® point where a voltage source is developed in the power supply or on a board.

◆ 12V — CIRCUITRACE® point where a previously developed voltage source supplies voltage on a board.

◇ 12V — CIRCUITRACE® point where a component, or a board, connects to a voltage source supply.

Cabling: Heavy lines reduce use of multiple lines.

Voltages are taken from ground, unless noted otherwise.
Waveforms are taken from ground, unless noted otherwise. Waveforms taken with triggered scope and NTSC color bar generator with window pattern. Waveform voltage is peak to peak. Timebase is per division. Waveforms shown at 10 divisions. Supply voltages maintained as seen at input.
Controls adjusted for normal operation.
Capacitors are 50 volts or less, 5% or greater unless noted.
Electrolytic capacitors are 50 volts or less, 20% or greater unless noted.
Resistors are 1/2 W or less, 5% or greater unless noted.
Value in ( ) used in some versions.
Measurements with switching as shown, unless noted.
Rated voltage shown on zener diodes.
Terminal identification may not be found on unit.
If a board schematic has a grid locator at the left and bottom sides, function names and (grid co-ordinates) are added to lines shown entering or exiting the heavy cabling line. The (grid co-ordinates) help to locate where the other connecting points to the same line are located on the same schematic or on another schematic of the same board. A further help has been to use an angling line to indicate direction of the same line exiting the heavy cabling line.

EXAMPLE

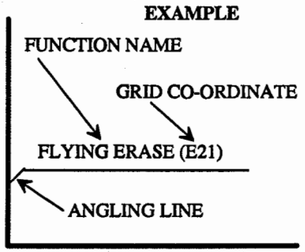

GE

MODEL VG7620

ELECTRICAL PARTS LIST continued

Item No.	Description	Mfr. Part No.	Notes
D1011	MA4051N-M	184106	-
	RD5.1JSAB2X	184106	-
D1012	MA858	180570	-
D1013	MA165	148771	-
# D1015	MA2180	193159	-
	RD18FB	193159	-
# D1016	MA165	148771	-
# IC1001	0N3161-Q	190224	-
	0N3161-R	190224	-
# Q1001	2SC4533LP	190254	-
	2SC4418LF608	190254	-
# Q1002	2SD1458	184073	-
Q1003	2SD636QRS	146512	-
Q1004	2SB641QRS	146899	-
Q1005	2SB641RS	146899	-
OTHER			
# AC CORD	Line Cord	187595	AC, Polarized
# C1001	.01 5%	162781	-
# C1002	.0033 20% 125V	185496	-
# C1003	.0033 20% 125V	185251	-
# C1004	82µF 200V	195475	-
# C1011	4.7µF 50V	144980	-
# C1012, 13	330µF 18V	184117	-
# C1014	4.7µF 50V	144980	-
# C1016	330µF 6.3V	163157	-
# C1017	1000µF 6.3V	186753	-
# C1025, 28	220pF 5% 400V	195661	-
# F1001	Fuse	149386	1.6Amp, 125V
# L1001	29µH	183691	-
# PR1001	Fuse	185208	1.5Amp
# R1001	2.7M 10% 1/2W	183127	-
# R1004	33K 5% 2W	187546	-
# R1005	82 5% 1W	187543	-
# R1010, 11	10 5% 1/4W	829010	-
# R1012	18 5% 1W	175782	-
# R1023	.56 5% 1W	831856	-
# T1001	Power	193204	-
	PC Board	195541	Power Supply

SENSOR LED BOARD

Item No.	Description	Mfr. Part No.	Notes
SEMICONDUCTORS			
D1551	LN59NV	-	-
	LN59	-	-
OTHER			
	PC Board	195447	LED Sensor

SUPPLY PHOTO TR BOARD

Item No.	Description	Mfr. Part No.	Notes
SEMICONDUCTORS			
Q1551	PN150NV	144028	-
OTHER			
	PC Board	195484	Supply Photo TR

For SAFETY use only equivalent replacement part.

TAKEUP PHOTO TR BOARD

Item No.	Description	Mfr. Part No.	Notes
SEMICONDUCTORS			
Q1552	PN150NV	144028	-
OTHER			
	PC Board	190220	Takeup Photo TR

TIMER/OPERATION I BOARD

Item No.	Description	Mfr. Part No.	Notes
SEMICONDUCTORS			
D7501	MA165	148771	-
	1SS119	148771	-
D7506 Thru			
D7509	MA165	148771	-
	1SS119	148771	-
D7511, 12, 14	MA165	148771	-
	1SS119	148771	-
D7516 Thru			
D7519	MA165	148771	-
	1SS119	148771	-
D7522	RD9.1JSB1	185624	-
	RD9.1JSB2	185624	-
	RD9.1JSB3	185624	-
	MA4091N-M	185624	-
D7526	MA165	148771	-
	1SS119	148771	-
IC7501	UPD75216AGF568	195774	-
IC7502	MN1280-L	185231	-
Q7501	DTC144EA	189631	-
	UN1213	189631	-
OTHER			
DP7501	VSZS0082A	195605	Display Tube
SW7504	Switch	185443	Rewind/Review
SW7505	Switch	185443	FF/Cue
SW7507	Switch	185443	Play/X2
SW7508	Switch	185443	Record
SW7510	Switch	185443	Pause/Still
SW7511	Switch	185443	VCR/TV
SW7512	Switch	185443	Channel Up
SW7513	Switch	185443	Channel Down
X7501	Crystal	187586	4.19MHz
	PC Board	195542	Timer/Operation I

TIMER/OPERATION II BOARD

Item No.	Description	Mfr. Part No.	Notes
OTHER			
SW7502	Switch	185443	Stop/Eject
SW7503	Switch	185443	Power
	Receiver (1)	VEQS0354	IR Remote
	Receiver (1)	VEQS0357	IR Remote
	Receiver (1)	VEQS0358	IR Remote
	PC Board	195543	Timer/Operation II

(1) GE part number is not available, manufacturer part number has been supplied instead.

UHF/VHF TUNER & TV DEMODULATOR BOARD

Item No.	Description	Mfr. Part No.	Notes
SEMICONDUCTORS			
IC701	AN5180NK	195492	-
Q701	2SC4417	190253	-
Q702	2SD601QRS	155131	-
	2SC2712GRY	155131	-
	2SC2412KRS	155131	-
OTHER			
R718	5000	185539	Burst Level
R739	5000	185539	RF AGC
	PC Board (2)	195481	UHF/VHF Tuner & TV Demodulator

* Indicates the item number used in Mechanical Parts List and Exploded Views.

(2) The FCC specifications will not be satisfied if components of the UHF/VHF tuner and frequency synthesizer sections are replaced individually. If service of these sections is necessary, replace the complete UHF/VHF tuner & TV demodulator board.

CABINET PARTS

Description	Mfr. Part No.
Badge	190617
Bottom Panel	195525
Button - Power	195523
Front Door	195521
Front Door Clamper	187609
Front Panel	195522
Top Cover	195524

Important Parts Information

- The parts listed here are those not usually available from a well-stocked supply cabinet or bin.
- On the parts lists, safety items are marked with a # to remind you that only exact replacements are recommended for these items.
- When ordering parts, state the model number, part number, and description.

Obtaining Parts

Many of these parts are available from your local Sams authorized distributor or the manufacturer of the equipment. Call Sams for the name of your nearest distributor:

800-428-7267

Or consult the Sams *Annual Index* for the address of the original equipment manufacturer.

A B

TIMER/OPERATION I & II BOARD SCHEMATIC

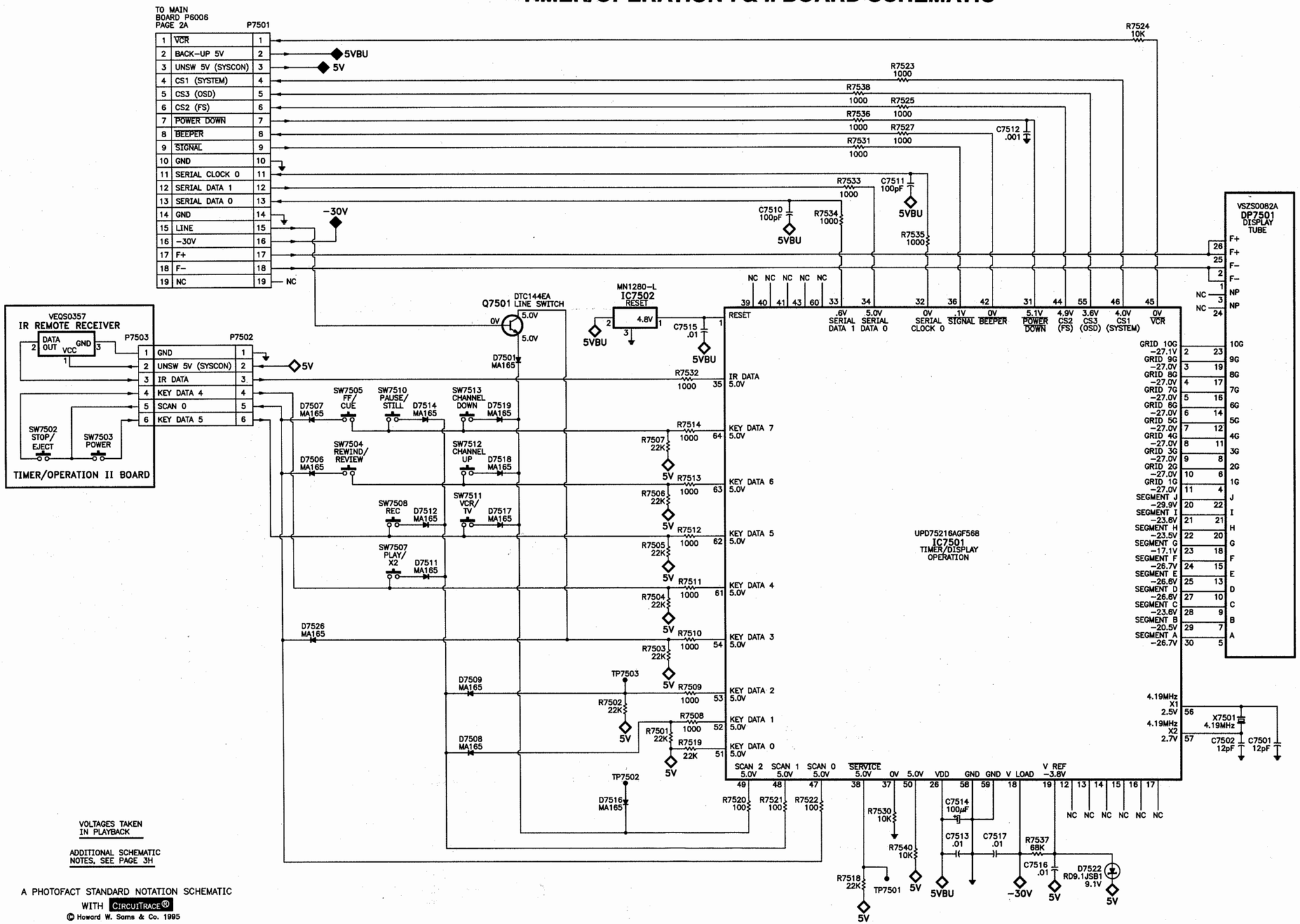

VOLTAGES TAKEN IN PLAYBACK

ADDITIONAL SCHEMATIC NOTES, SEE PAGE 3H

A PHOTOFACT STANDARD NOTATION SCHEMATIC WITH CIRCUITRACE®

ELECTRICAL PARTS LIST

CAPSTAN/CYLINDER MOTOR DRIVE BOARD

Item No.	Description	Mfr. Part No.	Notes
SEMICONDUCTORS			
IC2601	AN3813K	187553	-
IC2602	PUA3228	190227	-
IC2603	AN3826NK	195494	-
OTHER			
	PC Board	195544	Capstan/Cylinder Motor Drive

HEAD AMP BOARD

Item No.	Description	Mfr. Part No.	Notes
SEMICONDUCTORS			
IC3501	BA7212S	190232	-
Q3501	2SA937MRS	186801	-
	2SB641QRS	186801	-
OTHER			
R3509	2000	185528	Record Luminance
R3510	1000	187763	Record Chrominance
	PCBoard	195547	Head Amp

IR WIRELESS TRANSMITTER

Item No.	Description	Mfr. Part No.	Notes
SEMICONDUCTORS			
D6801	SE303ACK	185628	-
IC6801	UPD6125ACA-630	D6125ACA-630	-
Q6801	2SD1458	184073	-
OTHER			
X6801	Crystal	152889	Oscillator, 455kHz
	Batter Cover	195473	
	PC Board	190271	IR Wireless Transmitter
	Transmitter	194963	IR Wireless

MAIN BOARD

Item No.	Description	Mfr. Part No.	Notes
SEMICONDUCTORS			
D1201	MA4100N	190208	-
	MA4100-H	190208	-
	RD10JSAB3	190208	-
D1202, 03, 04	MA165	148771	-
	1SS119	148771	-
D1205	MA4068-M	190681	-
	MA4068-MM	190681	-
	RD6.8ESAB2	190681	-
D3002	04AZ9.1ZTPA7	195668	-
	MA4091-M	195668	-
D3003, 04, 05	MA165	148771	-
	1SS119	148771	-
D6001	ERA15-01	188234	-
	DSK10B	188234	-
D6004, 05, 06	MA165	148771	-
	1SS119	148771	-
D6008, 09, 16	MA165	148771	-
	1SS119	148771	-
D7001	MA165	148771	-
	1SS119	148771	-
D7002, 03	MA4160-M	195478	-
	MA4160N-M	195478	-
	RD16JSAB2	195478	-
	04AZ16ZTPA7	195478	-
D7004	04AZ5.1ZTPA7	196317	-
IC3001	VCRS0109A	195495	-
IC3003	MB90062-103A	195496	-
IC3004	MN3830S	197497	-
IC4001	UPC2308ACA	190233	-
	UPC2308CA	190233	-
IC6001	MN67512VLQ	195552	-
IC6003	AN1358	195606	-
	AN6562	195606	-
Q1201	2SD636QRS	150516	-
	2SC2021MRS	150516	-
	2SC1740SRS	150516	-
	2SC3311QRS	150516	-
# Q1202	2SD1581	190255	-
Q3002	2SD636QRS	146512	-
	2SC2021MRS	146512	-
	2SC1740SRS	146512	-
	2SC3311QRS	146512	-
Q3004	2SB643QRS	147924	-
Q3007	2SD636QRS	146512	-
	2SC2021RS	146512	-
	2SC1740SRS	146512	-
	2SC3311QRS	146512	-
Q3010	2SC1740SRS	161123	-
Q3011	2SB641QRS	195510	-
	2SA937MRS	195510	-
	2SA1309QRS	195510	-
	2SA933SRS	195510	-
Q3014	DTC144ES	187656	-
	UN4213	187656	-
Q3015	2SA933SRS	195510	-
Q4001	2SD636R	186741	-
	2SC3311R	186741	-
Q4002	2SB641RS	146899	-
	2SA937MS	146899	-
	2SA1309RS	146899	-
	2SA933SS	146899	-
Q6002	2SD947	176925	-
Q6003	2SB641QRS	195510	-
	2SA937MRS	195510	-
	2SA1309QRS	195510	-
	2SA933SRS	195510	-
Q6005	2SD636QRS	146512	-
	2SC2021MRS	146512	-
	2SC1740SRS	146512	-
	2SC3311QRS	146512	-
Q6006, 08	2SB641QRS	195510	-
	2SA937MRS	195510	-
	2SA1309QRS	195510	-
	2SA933SRS	195510	-
Q6011	DTC143EA	195511	-
Q6014	DTC124EA	187659	-
	UN1212	187659	-
Q6015	2SB641QRS	195510	-
	2SA937MRS	195510	-
	2SA1309QRS	195510	-
	2SA933SRS	195510	-
Q7001	2SD1330RST	156254	-
Q7002	DTC314TS	191973	-
	DTC314TA	191973	-
Q7005, 06	2SD636QRS	146512	-
	2SC2021MRS	146512	-
	2SC1740SRS	146512	-
	2SC3311QRS	146512	-
OTHER			
C3043	50pF Trimmer	195515	OSD Position
# R1205	120 2% 1/4W	187276	-
R3017	1000	190258	Video Level
R6061	100K	185531	PG Shifter
# R7010	1200 5% 1W	831212	-
X3001	Crystal	195514	7.16MHz
X6001	Crystal	195604	7.159MHz
	PC Board	195540	Main

For SAFETY use only equivalent replacement part.

MECHANISM CONNECTION BOARD

Item No.	Description	Mfr. Part No.	Notes
SEMICONDUCTORS			
IC1551	0N2170-R	195493	-
	0N2170-S	195493	-
OTHER			
	PC Board	195485	Mechanism Connection

MISCELLANEOUS

Item No.	Description	Mfr. Part No.	Notes
OTHER			
SW1551	Switch	190261	Cassette Position
SW1552	Switch	190262	Mode Select
SW1554	Switch	190263	Safety Tab
18 *	Head	194298	Full Erase, Assembly
20 *	Assembly	195438	DD Cylinder
21 *	Assembly	190065	Upper Cylinder
22 *	Head	195439	Audio/Control, Assembly
23 *	Head	190225	FG
24 *	Assembly	195440	Capstan Stator
128 *	Unit	190130	Solenoid
	Adapter	AH055	75/300 Ohms
	Unit	195545	VHF Block/RF Converter (Includes Antenna Terminal Assembly)

POWER SUPPLY BOARD

Item No.	Description	Mfr. Part No.	Notes
SEMICONDUCTORS			
# D1001	S1WBA40	185237	-
D1002	EG01	187267	-
	ERA18-04	187267	-
D1003, 04	MA165	148771	-
# D1005	MA188	190206	-
# D1006	RU2YX	187574	-
	ERB32-01L3	187574	-
# D1007	MA188	190206	-
# D1008	AK03	184096	-
	1GWJ43	184096	-
# D1009	MA178	184094	-

For SAFETY use only equivalent replacement part.

UHF/VHF TUNER & TV DEMODULATOR BOARD

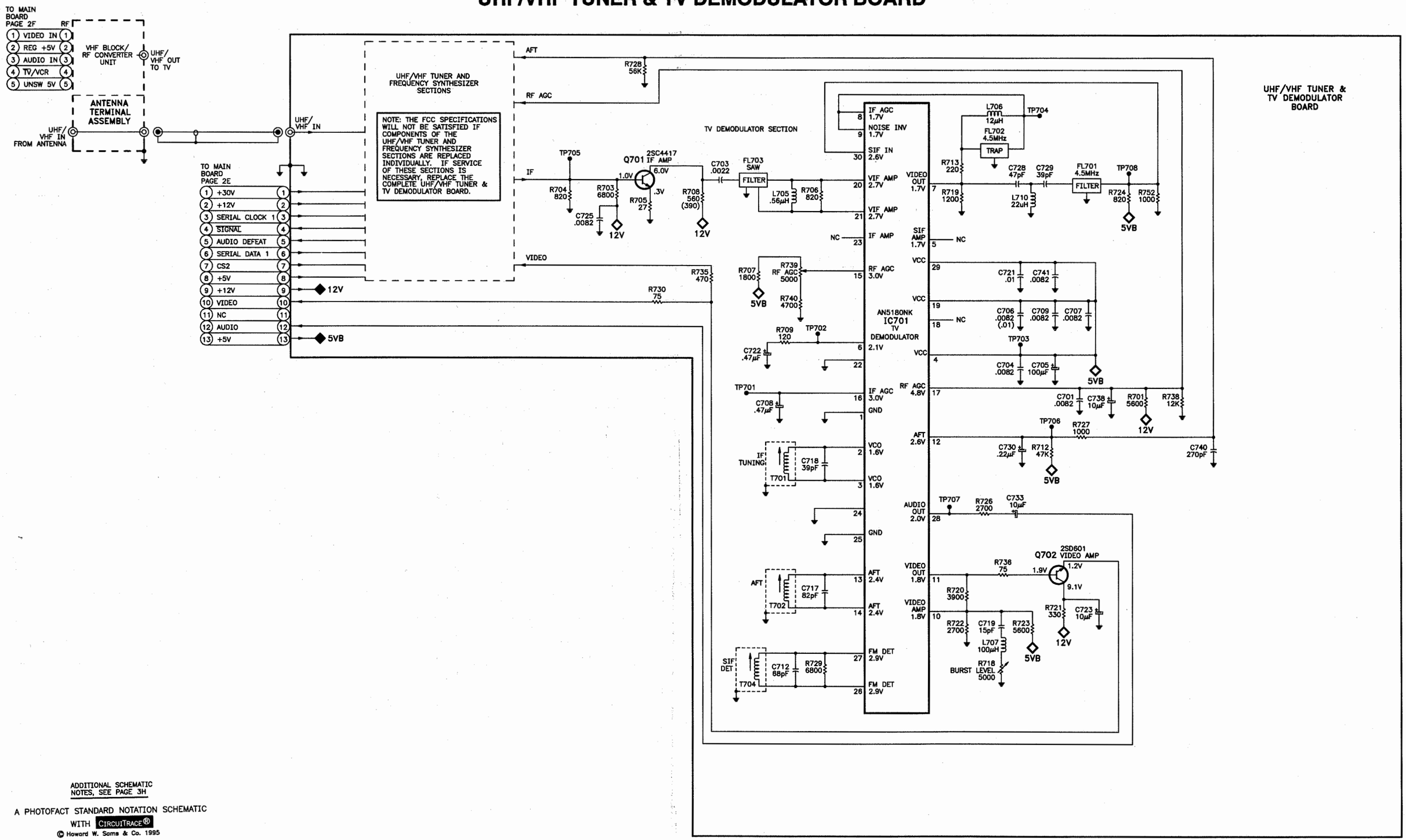

ADDITIONAL SCHEMATIC NOTES, SEE PAGE 3H

A PHOTOFACT STANDARD NOTATION SCHEMATIC WITH CIRCUITRACE®

MECHANICAL SERVICE TIPS

DEFECT	REPAIR
Tape will not load.	Cassette up unit may be misaligned.
Tape will not load, partially loads, or squeals.	Replace ribbed timing belt (19).
Tape will not load and VCR makes gear jumping sound.	Gear assemblies may be broken or misaligned. Improved gears may be available from manufacturer.
VCR damages bottom of tape during playback or record.	Tape guides on loading post T unit (137) and loading post S unit (138) may be out of alignment.
Tape does not move in play mode and VCR stops.	P5 sector gear (2) may be broken.
Audio low, distorted, poor high frequencies	Audio/Control head assembly (22) may be misaligned.

Write your service tips in the tables above and you will have a record of the defects and repairs you have made using this service information.

Have you ever wanted service tips to fix that VCR quickly? We would like to provide that service for you. As you and other servicemen send in your service tips, we will put them in a database and make the service available.

We invite you to Fax or mail your service tips, together we can make servicing a VCR easier for all of us.

Fax **1-317-298-5604**

or mail to:

Howard W. Sams & Company
Attention: VCRfacts
2647 Waterfront Parkway, East Drive
Suite 300
Indianapolis, IN 46214-2041

ELECTRICAL SERVICE TIPS

DEFECT	REPAIR
VCR will not turn on, no functions, display is normal.	Electrolytic C1016 330μF 6.3V on power supply board may be shorted.
VCR will not turn on, no functions, AC fuse F1001 ok.	Electrolytic C1021 1μF 50V and zener diode D1015 on power supply board may be defective.